SALEM engineering group, inc.

**8711 Monroe Court, Suite A**
**Rancho Cucamonga, CA 91730**
**(909) 980-6455 Office**
**(909) 980-6435 Fax**

March 8, 2019 **Job No. 3-418-1026**

Mr. Greg Lukosky
**VantageOne Real Estate Investments**
4 Corporate Plaza, Suite 210
Newport Beach, CA 92660

**Subject:** **NOISE STUDY**
Proposed Commercial Development
SWC Yucaipa Boulevard and 18th Street
Yucaipa, California

Dear Mr. Lukosky:

At your request and authorization, a Noise Study for the above-referenced project (San Bernardino County Assessor Parcel Numbers [APNs] 0300-191-01; -02; -17; -18; -28; -29; -30; -31 and 0300-192-07; -08) located on the southwest corner of Yucaipa Boulevard and 18th Street in Yucaipa, California (subject property) was conducted. The Noise Study is an analysis of the proposed project's temporarily noise impacts associated with the construction of the project, as well as long-term noise impacts associated with the operation of the proposed project. The Noise Study was prepared utilizing the City of Yucaipa General Plan, Municipal Code as well as the City of Yucaipa's Development Code.

Based on the included report, noise impacts from the construction of the project would generate in short-term noise. As such, construction activities are recommended to adhere to the City's allowable construction hours and not occur between 7:00pm and 7:00am on weekdays and Saturdays; and anytime on Sundays. Additionally, implementation of construction noise reduction measures are recommended (as noted in Section 3.4 Recommendations and Conclusions of included report).

On-site operational noises from HVAC, car wash, parking lot and drive-thru noise would not exceed the City's exterior and interior noise standards for residential or commercial uses. The project would not conflict with the land use compatibility standards contained in the Yucaipa General Plan. In addition, the off-site traffic noise would not be perceptible at nearby sensitive land uses.

We appreciate the opportunity to assist you with this project. If you have any questions, or if we may be of further assistance, please do not hesitate to contact our office at (909) 980-6455.

Respectfully submitted,

**SALEM Engineering Group, Inc.**

Maria G. Ruvalcaba, EP
Project Manager

# Yucaipa Point

## Noise Study

*prepared for*

**Salem Engineering Group**
13355 Noel Road, Suite 1100
Dallas, Texas 75240
Contact: Maria Ruvalcaba

*prepared by*

**Rincon Consultants, Inc.**
301 9th Street
Redlands, California 92374

**March 2019**

RINCON CONSULTANTS, INC.
Environmental Scientists | Planners | Engineers
rinconconsultants.com

# Yucaipa Point

## Noise Study

*prepared for*

**Salem Engineering Group**
13355 Noel Road, Suite 1100
Dallas, Texas 75240
Contact: Maria Ruvalcaba

*prepared by*

**Rincon Consultants, Inc.**
301 9th Street
Redlands, California 92374

**March 2019**

RINCON CONSULTANTS, INC.
Environmental Scientists | Planners | Engineers
rinconconsultants.com

# Table of Contents

1 Project Description ..... 1
1.1 Introduction ..... 1
1.2 Project Summary ..... 1
2 Background ..... 5
2.1 Overview of Sound Measurement ..... 5
2.2 Sensitive Receivers ..... 6
2.2.1 Project Noise Setting ..... 6
2.3 Regulatory Setting ..... 9
2.3.1 Yucaipa General Plan Noise Element ..... 9
3 Impact Analysis ..... 11
3.1 Methodology ..... 11
3.1.1 Construction Noise ..... 11
3.1.2 Land Use Compatibility ..... 12
3.1.3 Operational Noise Sources ..... 12
3.2 Significance Thresholds ..... 13
3.2.1 Construction Noise ..... 13
3.2.2 Land Use Compatibility ..... 13
3.3 Impact Analysis ..... 14
3.3.1 Construction ..... 14
3.3.2 Land Use Compatibility ..... 14
3.3.3 Operational Noise Sources ..... 15
3.3.4 Recommendations and Conclusions ..... 23
4 References ..... 24

## Tables

Table 1 Project Vicinity Sound Level Monitoring Results ..... 7
Table 2 Yucaipa Noise Standards ..... 9
Table 3 City of Yucaipa Development Code Non-Residential Interior Noise Standards ..... 10
Table 4 City of Yucaipa General Plan Land Use Criteria Standards ..... 10
Table 5 On-Site Noise Model Summary ..... 17
Table 6 Project Traffic ..... 22

# Figures

Figure 1 Regional Location ..... 2
Figure 2 Project Site Location ..... 3
Figure 3 Site Plan ..... 4
Figure 4 Noise Measurement Locations ..... 8
Figure 5 Car Wash Noise ..... 18
Figure 6 HVAC Noise ..... 19
Figure 7 Combined Operational Noise – Car Wash and HVAC ..... 20

# Appendices

Appendix A Noise Measurement Data
Appendix B Roadway Construction Noise Model Results
Appendix C Car Wash and HVAC Noise Specifications
Appendix D Yucaipa Point Traffic Impact Analysis Study

# 1 Project Description

## 1.1 Introduction

This study analyzes the potential noise impacts of a commercial development proposed at the northeast corner of Yucaipa Boulevard and Interstate 10 (I-10), Assessor Parcel Numbers (APN) 0300-191-01, -02, -17, -18, -28, -29, -30, -31, in the city of Yucaipa, California. Rincon Consultants, Inc. (Rincon) prepared the study under contract to and for use by Salem Engineering Group. The purpose of this report is to analyze the proposed temporary noise impacts associated with project construction and long-term noise impacts associated with project operation.

## 1.2 Project Summary

The project is a commercial development on two sites separated by Avenue E. The eastern site (Area A) is approximately 22 acres and would involve construction of an approximately 34,000-square foot (sf) health club, approximately 39,000-sf theater with 975 seats, three restaurants approximately 17,900-sf, five fast food restaurants all with a drive-through, an approximately 3,779-sf car wash with a drive-through tunnel and office, and approximately 9,100-sf of shops. A total of 925 parking spaces will be provided for Area A that will be accessed by five driveways, two from Avenue E, one from Yucaipa Boulevard, and two from 18$^{th}$ Street.

The smaller western site (Area C) is a 1.72-acre site. Construction on Area C would involve an approximately 5,000-sf fast food restaurant with drive-through, approximately 2,000-sf retail shop, and approximately 1,000-sf restaurant. A total of 60 parking spaces will be provided for Area C, which will be accessed via a driveway off of Avenue E. The project site (Area A and C) has a zoning designation of Service Commercial (CS). Figure 1 shows the regional location, Figure 2 shows the project site location, and Figure 3 shows the site plan

## Figure 1 Regional Location

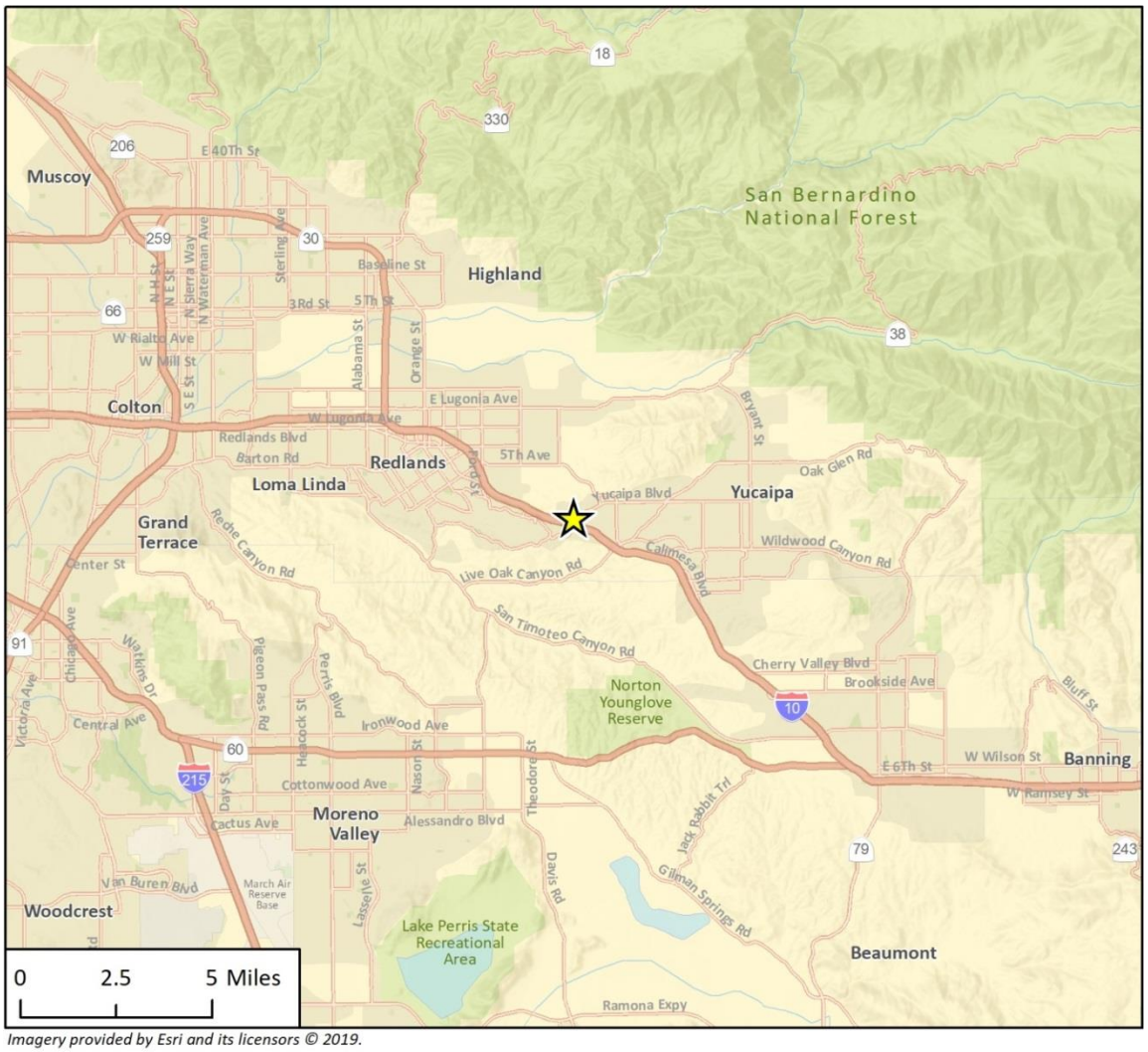


*Imagery provided by Esri and its licensors © 2019.*

Project Location

N

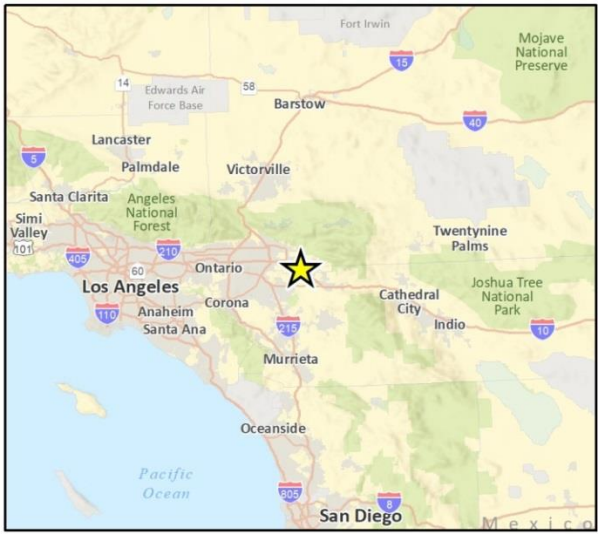

**Figure 2 Project Site Location**

*Imagery provided by Microsoft Bing and its licensors © 2019.*

Fig 2 Project Location

## Figure 3 Site Plan

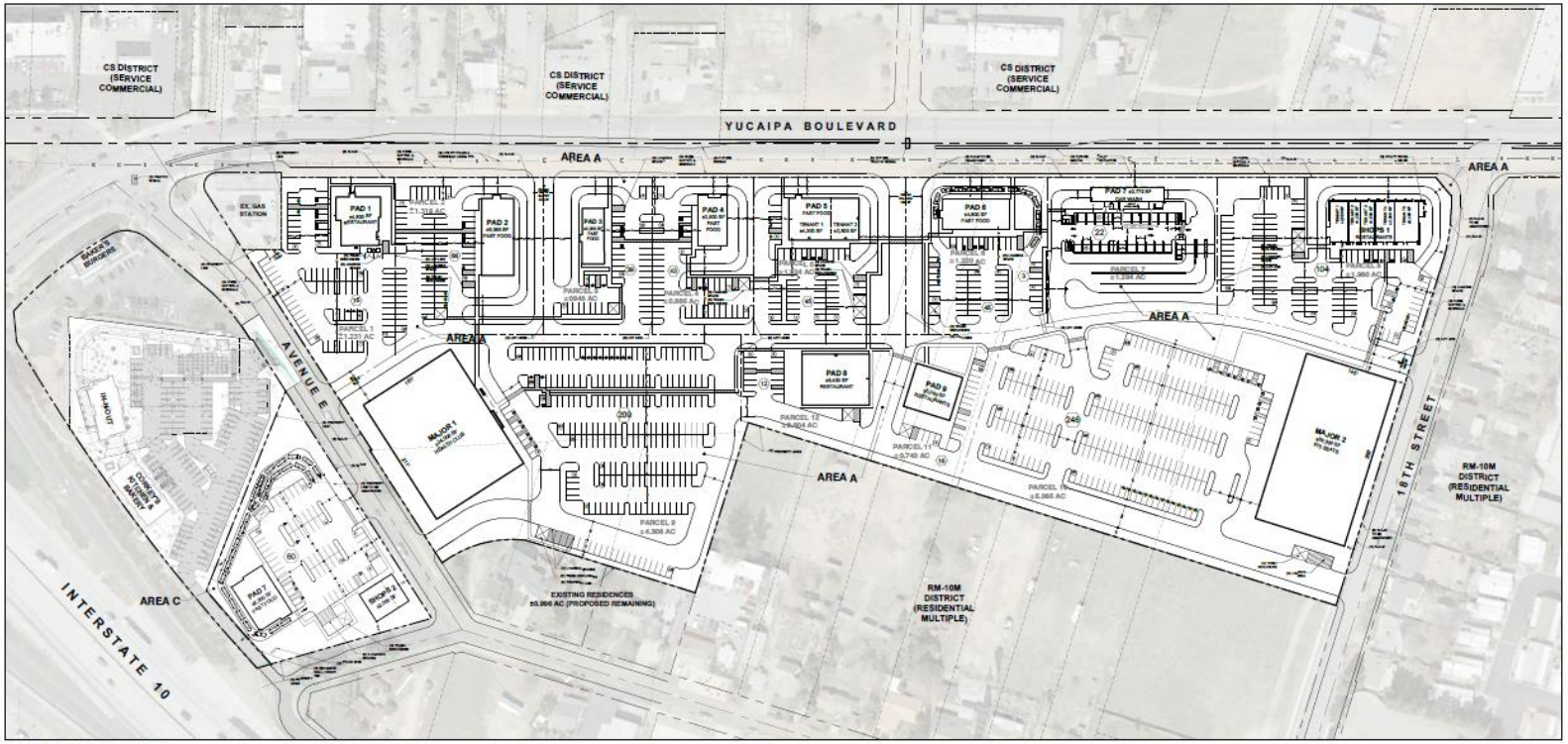


### PROJECT SUMMARY

#### AREA A - COMMERCIAL

**ZONING**

| | |
|---|---|
| JURISDICTION: | CITY OF YUCAIPA |
| EXISTING ZONING: | CS (SERVICE COMMERCIAL) |
| REQUIRED ZONING: | CS (SERVICE COMMERCIAL) |

**SITE AREA**

| | |
|---|---|
| NET COMMERCIAL SITE AREA: | ± 31.267 AC |
| R-O-W DEDICATION: | ± 0.4567 AC |
| TOTAL GROSS SITE AREA: | ± 31.767 AC |

**BUILDING AREA**

| USES | | TOTAL BUILDING AREA |
|---|---|---|
| MAJOR 1 (HEALTH CLUB) | | ± 36,000 SF |
| MAJOR 2 (THEATER) | | ± 35,000 SF |
| PAD 1 (RESTAURANT) | | ± 4,200 SF |
| PAD 2 (FAST-FOOD) | | ± 4,250 SF |
| PAD 3 (FAST-FOOD) | | ± 3,000 SF |
| PAD 4 (FAST-FOOD) | | ± 3,200 SF |
| PAD 5 (FAST-FOOD) | | ± 7,100 SF |
| TENANT 1 | ± 4,500 SF | |
| TENANT 2 | ± 2,600 SF | |
| PAD 6 (FAST FOOD) | | ± 4,500 SF |
| PAD 7 (CAR WASH) | | ± 3,775 SF |
| CAR WASH TUNNEL | ± 3,146 SF | |
| OFFICE | ± 624 SF | |
| SHOPS 1 (RESTAURANT) | | ± 5,100 SF |
| TENANT 1 | ± 2,000 SF | |
| TENANT 2 | ± 1,200 SF | |
| TENANT 3 | ± 1,000 SF | |
| TENANT 4 | ± 2,000 SF | |
| TENANT 5 | ± 2,400 SF | |
| PAD 8 (RESTAURANT) | | ± 5,400 SF |
| PAD 9 (RESTAURANT) | | ± 5,000 SF |
| TOTAL BUILDING AREA: | | ± 128,244 SF |

TOTAL NET SITE COVERAGE: ± 13.94% (± 6,050 SF/AC)

**PARKING SUMMARY - COMMERCIAL**

| USES | RATIO REQ'D | SPACES REQ'D | SPACES PROV'D |
|---|---|---|---|
| MAJOR 1 (HEALTH CLUB) | 1 SP/200 SF | 179 SP | 209 SP |
| MAJOR 2 (THEATER) | 1 SP/4 SEATS | 244 SP | 246 SP |
| PAD 1 (RESTAURANT) | 1 SP/50 SF* | 42 SP | 75 SP |
| PAD 2 (FAST-FOOD) | 1 SP/50 SF* | 51 SP | 66 SP |
| PAD 3 (FAST-FOOD) | 1 SP/50 SF* | 30 SP | 35 SP |
| PAD 4 (FAST-FOOD) | 1 SP/50 SF* | 32 SP | 43 SP |
| PAD 5 (FAST-FOOD) | 1 SP/50 SF* | | 46 SP |
| TENANT 1 | 1 SP/50 SF* | 45 SP | |
| TENANT 2 | 1 SP/50 SF* | 26 SP | |
| PAD 6 (FAST FOOD) | 1 SP/50 SF* | 48 SP | 46 SP |
| PAD 7 (CAR WASH)** | 1 SP/200 SF | 3 SP | 3 SP |
| | | | 22 VACUUM SP |
| SHOPS 1 (RESTAURANT) | | | 104 SP |
| TENANT 1 | 1 SP/50 SF* | 20 SP | |
| TENANT 2 | 1 SP/50 SF* | 12 SP | |
| TENANT 3 | 1 SP/50 SF* | 10 SP | |
| TENANT 4 | 1 SP/50 SF* | 20 SP | |
| TENANT 5 | 1 SP/50 SF* | 24 SP | |
| PAD 8 (RESTAURANT) | 1 SP/50 SF* | 54 SP | 12 SP |
| PAD 9 (RESTAURANT) | 1 SP/50 SF* | 50 SP | 12 SP |
| TOTAL PARKING: | | 855 SP | 1,***528 SP |
| TOTAL PARKING RATIO PROVIDED: | | | ***± 1.21 SP/1000 SF |

* RESTAURANTS TO BE PARKED AT A RATIO OF 1 SP/50 SF OF SEATING AREA; ASSUME THAT 50% OF RESTAURANT BUILDING AREA IS DEDICATED AS SEATING AREA.
** ONLY ± 624 SF OF OFFICE AREA IS USED FOR REQUIRED PARKING.
*** TOTAL PROVIDED NUMBER & RATIO INCLUDES 22 VACUUM STALLS.

#### AREA C - COMMERCIAL

**ZONING**

| | |
|---|---|
| JURISDICTION: | CITY OF YUCAIPA |
| EXISTING ZONING: | CS (SERVICE COMMERCIAL) |
| REQUIRED ZONING: | CS (SERVICE COMMERCIAL) |

**SITE AREA**

| | |
|---|---|
| NET COMMERCIAL SITE AREA: | ± 1.722 AC |

**BUILDING AREA**

| USES | | TOTAL BUILDING AREA |
|---|---|---|
| PAD 7 (FAST FOOD) | | ± 4,000 SF |
| SHOPS 2 | | ± 5,000 SF |
| RETAIL | ± 2,000 SF | |
| RESTAURANT | ± 1,000 SF | |
| TOTAL BUILDING AREA: | | ± 9,000 SF |

TOTAL NET SITE COVERAGE: ± 12.07% (± 4,646 SF/AC)

**PARKING SUMMARY - COMMERCIAL**

| USES | RATIO REQ'D | SPACES REQ'D | SPACES PROV'D |
|---|---|---|---|
| PAD 7 (FAST FOOD)** | 1 SP/50 SF* | 42 SP | 42 SP |
| SHOPS 2 | | | |
| RETAIL | 1 SP/200 SF | 8 SP | 8 SP |
| RESTAURANT | 1 SP/50 SF* | 10 SP | 10 SP |
| TOTAL PARKING: | | 60 SP | 60 SP |

TOTAL PARKING RATIO PROVIDED: ± 0.25 SP/1000 SF

* RESTAURANTS TO BE PARKED AT A RATIO OF 1 SP/50 SF OF SEATING AREA; ASSUME THAT 50% OF RESTAURANT BUILDING AREA IS DEDICATED AS SEATING AREA.
** ASSUMING THE TOTAL SEATING AREA IS ± 2,070 SF

#### GENERAL INFORMATION

**PROJECT NOTES**

1. THIS IS A CONCEPTUAL SITE PLAN FOR PLANNING PURPOSES ONLY.
2. THIS SITE PLAN IS BASED ON A CAD FILE OF TOPO & BOUNDARY SURVEY PREPARED BY INLAND AERIAL SURVEYS, INC. PROVIDED VIA E-MAIL 06.24.2016 AND YUCAIPA BOULEVARD STREET IMPROVEMENTS PREPARED BY APD CONSULTANTS, INC. DATED 09/29/2016.

**GREENBERGFARROW CONTACTS**

| | |
|---|---|
| SITE PLANNER/PROJECT MANAGER: | I.BRAHMBESCHAC |
| SITE DEV. COORDINATOR: | F.COSA |

LOCATION MAP

GreenbergFarrow
30 Executive Park, Suite 100
Irvine, CA 92614
t: 949 296 0450 f: 949 296 0437

VANTAGEONE REAL ESTATE INVESTMENTS, LLC
4 CORPORATE PLAZA DRIVE, SUITE 210
NEWPORT BEACH, CA 92660
t: 949-631-6620 c: 949-903-3818
CONTACT: TOM ROBINSON, trobi@aol.com

SCALE: 1"=60'-0"

**SP-21**
**SWC YUCAIPA BOULEVARD & 18TH STREET**
**YUCAIPA, CA**
**20170894.0**
**01.07.2019**

# 2 Background

## 2.1 Overview of Sound Measurement

Sound is a vibratory disturbance created by a moving or vibrating source, which is capable of being detected by the hearing organs. Noise is defined as sound that is loud, unpleasant, unexpected, or undesired and may therefore be classified as a more specific group of sounds. The effects of noise on people can include general annoyance, interference with speech communication, sleep disturbance, and, in the extreme, hearing impairment (Caltrans 2013a).

Noise levels are commonly measured in decibels (dB) using the A-weighted sound pressure level (dBA). The A-weighting scale is an adjustment to the actual sound pressure levels to be consistent with that of human hearing response, which is most sensitive to frequencies around 4,000 Hertz and less sensitive to frequencies around and below 100 Hertz (Kinsler, et. al. 1999).

Decibels are measured on a logarithmic scale that quantifies sound intensity in a manner similar to the Richter scale used for earthquake magnitudes. Thus, a doubling of the energy of a noise source, such as doubling of traffic volume, would increase the noise level by 3 dB; a halving of the energy would result in a 3 dB decrease (Crocker 2007).

Human perception of noise has no simple correlation with sound energy. The perception of sound is not linear in terms of dBA or in terms of sound energy. Two sources do not “sound twice as loud” as one source. It is widely accepted that the average healthy ear can barely perceive changes of 3 dBA, increase or decrease (i.e., 2x the sound energy); that a change of 5 dBA is readily perceptible (8x the sound energy); and that an increase (decrease) of 10 dBA sounds twice (half) as loud ((10.5x the sound energy) (Crocker 2007).

Sound changes both in level and frequency spectrum as it travels from the source to the receiver. The most obvious change is the decrease in level as the distance from the source increases. The manner in which noise reduces with distance depends on the important factors, including the type of sources, i.e., point or line, the path the sound will travel, site conditions and obstructions. Noise levels from a point source typically attenuate, or drop off, at a rate of 6 dBA per doubling of distance (6dBA/DD) (e.g., construction, industrial machinery, ventilation units, etc.). Noise from a line source (e.g., roadway, pipeline, railroad, etc.) typically attenuates at about 3 dBA per doubling of distance (Caltrans 2013a). The propagation of noise is also affected by the intervening ground, known as ground absorption. A hard site (such as parking lots or smooth bodies of water) receives no additional ground attenuation, and the changes in noise levels with distance (drop-off rate) are simply the geometric spreading of the source. A soft site (such as soft dirt, grass, or scattered bushes and trees) receives an additional ground attenuation value of 1.5 dBA per doubling of distance (Caltrans 2013a). Noise levels may also be reduced by intervening structures; the amount of attenuation provided by this “shielding” depends on the size of the object and the frequencies of the noise levels. Natural terrain features such as hills and dense woods, as well as man-made features such as buildings and walls, can significantly alter noise levels. Generally, any large structure blocking the line of sight will provide at least a 5-dBA reduction in source noise levels at the receiver (FHWA 2011).

Structures also can substantially reduce exposure to noise. Based on the Federal Highway Administration's (FHWA) modern building construction generally provides an exterior-to-interior noise level reduction of 20 – 35 dBA with closed windows (FHWA 2011).

The impact of noise is not a function of loudness alone. The time of day when noise occurs and the duration of the noise are also important. In addition, most noise that lasts for more than a few seconds is variable in its intensity. Consequently, a variety of noise descriptors has been developed. One of the most frequently used noise metrics that considers both duration and sound power level is the equivalent noise level ($L_{eq}$). The $L_{eq}$ is defined as the single steady A-weighted level that is equivalent to the same amount of energy as that contained in the actual fluctuating levels over a period of time (Typically, $L_{eq}$ is summed over a one-hour period. $L_{max}$ is the highest RMS (root mean squared) sound pressure level within the sampling period, and $L_{min}$ is the lowest RMS sound pressure level within the measuring period (Crocker 2007).

Since noise that occurs at night tends to be more disturbing than that which occurs during the day. Community noise is usually measured using Day-Night Average Level (DNL), which is the 24-hour average noise level with a +10 dBA penalty for noise occurring during nighttime (10:00 p.m. to 7:00 a.m.) hours, or Community Noise Equivalent Level (CNEL), which is the 24-hour average noise level with a +5 dBA penalty for noise occurring from 7:00 p.m. to 10:00 p.m. and a +10 dBA penalty for noise occurring from 10:00 p.m. to 7:00 a.m. (Caltrans 2013a). Noise levels described by DNL and CNEL usually differ by about 1 dBA. The relationship between the peak hour $L_{eq}$ value and the DNL/CNEL depends on the distribution of traffic during the daytime, evening, and nighttime. Quiet suburban areas typically have CNEL noise levels in the range of 40 to 50 dBA, while areas near arterial streets are in the 50 to 60+ CNEL range. Normal conversational levels are in the 60 to 65-dBA $L_{eq}$ range, and ambient noise levels greater than 65 dBA $L_{eq}$ can interrupt conversations (FTA 2018).

## 2.2 Sensitive Receivers

Noise exposure goals for various types of land uses reflect the varying noise sensitivities associated with those uses. Generally noise sensitive receivers are defined as noise sensitive uses such as residences, hospitals, schools, childcare facilities, and places of assembly.

### 2.2.1 Project Noise Setting

The most common source of noise in the project site vicinity is vehicular traffic on I-10 and Yucaipa Boulevard. Ambient noise levels are generally highest during the daytime and rush hour unless congestion substantially slows speeds.

To characterize ambient sound levels at and near the project site, three 15-minute sound level measurements were conducted on February 6, 2019 during the between 8:00 a.m. and 8:44 a.m. and 4:52 p.m. and 5:07 p.m. using an Extech, ANSI Type 2 integrating sound level meter.

Figure 4 shows the noise measurement locations, and Table 1 summarizes the results of the noise measurements. Detailed sound level measurement data is included in Appendix A.

## Table 1 Project Vicinity Sound Level Monitoring Results

| Measurement Location | Measurement Location | Sample Times | Approximate Distance to Primary Noise Source | Leq (dBA) | Lmin (dBA) | Lmax (dBA) |
|---|---|---|---|---|---|---|
| 1 | Northwest section of Area A along Yucaipa Boulevard | 8:29 – 8:44 a.m. | 35 feet to the centerline of Yucaipa Blvd. | 68.0 | 47.4 | 81.2 |
| 2 | Southeast section of Area A near 18th Street | 8:00 – 8:15 a.m. | 550 feet to the centerline of Yucaipa Blvd. | 43.6 | 39.6 | 53.4 |
| 3 | South of Area C near I-10 | 4:52 – 5:07 p.m. | 200 feet to centerline of I-10 | 70.0 | 60.4 | 78.2 |

See Figure 4 for Noise Measurement Locations and Appendix A for measurement results.

## Figure 4 Noise Measurement Locations

*Imagery provided by Microsoft Bing and its licensors © 2019.*

Fig 4 Noise Measurement Locations

# 2.3 Regulatory Setting

## 2.3.1 Yucaipa General Plan Noise Element

### Yucaipa Municipal Code

Chapter 9 of the City of Yucaipa Municipal Code provides performance standards for noise. Section 87.0905(b) provides noise standards for noise from any source as it affects adjacent properties, as shown in Table 2.

**Table 2 Yucaipa Noise Standards**

| Affected Land Use (Receiving Noise) | Noise Level (dBA) | Time Period |
|---|---|---|
| Residential | 55 | 7:00 a.m. to 10:00 p.m. |
| | 55 | 10:00 p.m. to 7:00 a.m. |
| Professional Services | 55 | Anytime |
| Other Commercial | 60 | Anytime |
| Industrial | 70 | Anytime |

Source: City of Yucaipa Municipal Code Section 87.0905(b)

The noise limits in Table 2 are for a cumulative period of more than 30 minutes in any hour. Higher noise limits are permitted for shorter periods of time within an hour, but in no case is the noise level permitted to exceed the levels in Table 2 plus 20 dBA. If the measured ambient noise level exceeds any of the noise limits, the allowable noise exposure standard shall be increased to reflect the ambient noise level. If the alleged offensive noise consists entirely of impact noise or simple tone noise, the noise levels shall be reduced by 5 dBA. Section 87.0905(b) exempts construction noise between 7:00 a.m. and 7:00 p.m. on weekdays and Saturdays.

### City of Yucaipa Development Code

The City of Yucaipa Development Code (which is contained within Section 85.020510 of the City of Yucaipa Municipal Code) provides the development standards for land uses within a Noise Hazard Overlay District. The Noise Hazard Overlay District is applied to those areas where the exterior DNL is 65 dB or greater. Ambient noise at the project site was measured as high as 70 dBA $L_{eq}$ at the northern portion of the project site along Yucaipa Boulevard (Table 1). Because DNL is roughly equal to $L_{eq}$ in suburban areas, the DNL on the project site would be as high as 70 dBA (SWRCB 1999). Therefore, the project site is in a Noise Hazard Overlay District and must comply with the standards.

In these districts the interior noise level shall not exceed 45 dB DNL in all single family and multifamily residences and educational institutions. Exterior noise levels in all single family and multifamily residential areas should not exceed 65 dB DNL, and shall not exceed 70 dB DNL. Ability to mitigate exterior noise at residential areas to the levels of 65 dB DNL and 70 dB DNL shall be considered by the City of Yucaipa when determining the actual DNL level with which the residential land use must comply. If, in the opinion of the City of Yucaipa, the mitigation measures necessary to reduce the exterior DNL to 65 dB are reasonable, then the City of Yucaipa will require compliance with a 65 dB DNL standard. However, if, in the opinion of the City of Yucaipa, the mitigation measures necessary to reduce the exterior DNL to 65 dB are unreasonable, then the City of Yucaipa will require compliance with a 70 dB DNL standard.

All non-residential structures within a Noise Hazard Overlay District shall be sound attenuated against the combined input of all present and projected exterior noise to not exceed the standards show in Table 3.

### Table 3 City of Yucaipa Development Code Non-Residential Interior Noise Standards

| Typical Use | 12-hour Average Noise Level, $L_{eq}(12)$ (dBA) |
|---|---|
| Educational Institutions, libraries, churches, etc. | 45 |
| General office, reception, etc. | 50 |
| Retail stores, restaurants, etc. | 55 |
| Other areas for manufacturing, assembly, test, warehousing, etc. | 65 |

Source: City of Yucaipa Municipal Code Section 85.020510

## City of Yucaipa General Plan

The City of Yucaipa General Plan identifies transportation-related DNL noise standards for various land use categories as shown in Table 4.

### Table 4 City of Yucaipa General Plan Land Use Criteria Standards

| Categories | Exterior[1] dBA DNL | Interior[2] dBA DNL |
|---|---|---|
| Residential, hotel, motel | 60 | 45 |
| Commercial, retail, bank, restaurant | – | 50 |
| Office building, R&D, offices | 65 | 45 |
| Amphitheater, hall, auditorium, theater | – | 45 |
| Hospital, school, church, library | 65 | 45 |
| Park | 65 | – |

[1] Outdoor environment is limited to private patios/balconies, private yards, picnic areas, playgrounds, and recreation areas. 65 dBA DNL will be allowed provided exterior noise levels have been substantially reduced through a reasonable application of the best available technology, and interior noise levels do not exceed 45 dBA DNL with windows closed.

[2] Indoor environment, excluding bathrooms, kitchens, toilets, closest, and corridors.

Source: City of Yucaipa General Plan Noise Element

# 3 Impact Analysis

## 3.1 Methodology

### 3.1.1 Construction Noise

Construction noise was estimated using the FHWA Roadway Construction Noise Model (RCNM) (2006). RCNM predicts construction noise levels for a variety of construction operations based on empirical data and the application of acoustical propagation formulas. Using RCNM, construction noise levels were estimated at noise sensitive receivers near the project site. RCNM provides reference noise levels for standard construction equipment, with an attenuation of 6 dBA per doubling of distance for stationary equipment.

For construction noise assessment, construction equipment can be considered to operate in two modes: stationary and mobile. As a rule, stationary equipment operates in a single location for one or more days at a time, with either fixed-power operation (e.g., pumps, generators, and compressors), or with variable noise operation (e.g., pile drivers, rock drills, and pavement breakers). Mobile equipment moves around the construction site with power applied in cyclic fashion, such as bulldozers, graders, and loaders (FTA 2018). Noise impacts from stationary equipment are assessed from the center of the equipment, while noise impacts for mobile construction equipment are assessed from the center of the equipment activity area (e.g., construction site). For linear construction, such as a roadway or pipeline, construction noise is assessed from the centerline of the alignment based on the distance worked in an hour.

Variation in power imposes additional complexity in characterizing the noise source level from construction equipment. Power variation is accounted for by describing the noise at a reference distance from the equipment operating at full power and adjusting it based on the duty cycle of the activity to determine the $L_{eq}$ of the operation (FHWA 2018).

Each phase of construction has a specific equipment mix, depending on the work to be accomplished during that phase. Each phase also has its own noise characteristics; some will have higher continuous noise levels than others, and some have high-impact noise levels. The maximum hourly $L_{eq}$ of each phase is determined by combining the $L_{eq}$ contributions from each piece of equipment used in that phase (FHWA 2018). In typical construction projects, grading activities generate the highest noise levels, as grading involves the largest equipment and covers the greatest area.

Typical heavy construction equipment during project grading and site preparation would include bulldozers, excavators, front-end loaders, graders, and stationary equipment, such as compressors and generators. It is assumed that diesel engines would power all construction equipment. For assessment purposes, and to be conservative, the loudest hour has been used for assessment. Noise levels are based on a loader, a dozer, a backhoe, an excavator, and a generator operating simultaneously. Using the FHWA Roadway Construction Noise Model (RCNM) to estimate noise associated with construction equipment maximum hourly noise levels are calculated to be 83 dBA Leq at 50 feet, as measured from the center of the construction site or activity. RCNM Calculations are included in Appendix B.

### 3.1.2 Land Use Compatibility

Noise levels affecting the project site would be primarily influenced by traffic noise from Yucaipa Boulevard and I-10. As discussed above, to determine ambient noise levels at the project site, Rincon Consultants collected three 15-minute noise measurements. See Figure 4 for noise measurement locations relative to the project site, Table 1 for noise measurement results, and Appendix A for noise measurement data. The noise measurements recorded the $L_{eq}$ at each location. The results of the noise measurements were compared to the City's noise compatibility standards to determine if the site provides a noise environment compatible with the proposed commercial uses.

### 3.1.3 Operational Noise Sources

Noise sources associated with operation of the project would consist of low speed on-site vehicular noise, landscaping maintenance, general conversations, parking lot noise, mechanical equipment, e.g., heating, ventilation, and air conditioning (HVAC) units, car wash operation, and noise from the proposed drive-through. Due to the distances and low noise levels associated with general site activities, on-site traffic, and landscape maintenance these sources are not considered significant and are not discussed further. The primary noise sources of concern would be the parking lots, HVAC, car wash operation, and fast-food drive-throughs.

#### On-site Noise Sources

On site-noise sources for mechanical equipment and the car wash were modeled using SoundPlan, a three-dimensional noise modeling software that accounts for the shielding and reflective effects associated with intervening buildings and walls. Propagation of modeled stationary noise sources was based on ISO Standard 9613-2, "Attenuation of Sound during Propagation Outdoors, Part 2: General Method of Calculation." The assessment methodology assumes that all receptors would be downwind of stationary sources. This is a worst-case assumption for total noise impacts, since, in reality, only some receptors will be downwind at any one time.

##### *Parking Lot Noise*

Parking noise is typically associated with screeching tires, slamming doors, and vehicle acceleration. Noise levels from parking lot noise sources were estimated at the nearest noise sensitive receptors using noise reference levels for parking lots and standard attenuation rates.

##### *Fast Food Drive-Through*

The project would include five fast-food drive-through restaurants that would generate noise from idling passenger vehicles, engine ignition, microphones, and conversation. Drive-through noise was calculated using a reference noise level of 54 dBA Lmax at 30 feet for idling vehicles in a drive-through and 65 dBA Lmax at 30 feet for the drive-through speaker system (Illingworth & Rodkin, Inc. 2010).

##### *Mechanical Equipment*

It is not known at this time which manufacturer, brand, or model of unit or units will be selected for use in the project. Based on the square footages of each structure it is estimated that the smaller buildings would require 5 ton HVAC units and larger buildings would require 10 ton HVAC units. Based on a review of published noise level data for Carrier HVAC Units, sound power levels could

range between 78 and 81 dBA. However, various sizes of HVAC units may be used to provide the necessary space conditioning. The noise levels used account for ventilation from the HVAC systems and therefore provide a conservative estimation. All HVAC units were modeled three feet above the roof line and spread out evenly on rooftops. HVAC specification sheets are included in Appendix C.

#### *Car Wash Operation*

The project would include a one-lane, drive-through car wash, which would generate noise primarily from operation of drying fans at the exit of the car wash. Blowers and other mechanical equipment would be located within the car wash building, which would dampen and block noise. Car wash noise was conservatively modeled using a reference noise level of 100 dB for each blower. Blowers were modeled nine feet above the ground. Car wash specification sheets are included in Appendix C.

### Off-site Traffic Noise

The project would generate vehicle trips, thereby increasing traffic on area roadways as a result of the project. IBI Group prepared a project-specific Traffic Impact Analysis (TIA) to determine existing, future, and existing and future with project traffic conditions on area roadways (IBI 2019, Appendix D). Existing and existing plus project traffic volumes on Yucaipa Boulevard, Avenue E, Dunlap Boulevard, and I-10 were used for the assessment of off-site noise impacts from the project TIA. The noise increase from proposed traffic was calculated assuming that a doubling of traffic would result in a 3 dB increase in noise (FTA 2018).

## 3.2 Significance Thresholds

### 3.2.1 Construction Noise

According to Section 87.0905(b) construction noise would have a significant impact if construction would occur between 7:00 a.m. and 7:00 p.m. on weekdays and Saturdays. No construction is allowed on Sundays or holidays.

### 3.2.2 Land Use Compatibility

The City has adopted noise standards that provide exterior and interior noise level limits. The project entails use of the proposed buildings for commercial uses. Based on a review of the City General Plan, the proposed use would be compatible with interior noise levels up to 50 dBA DNL. There are no exterior land use compatibility standards for commercial land uses.

### On-site Noise

On-site noise sources, such as HVAC and car wash noise, would be regulated by the Yucaipa Municipal Code as shown in Table 2 and Table 3. Impacts from new stationary noise sources would be significant if they exceed 55 dBA $L_{eq}$ during daytime and nighttime hours at neighboring residential sensitive receivers or 60 dBA $L_{eq}$ at neighboring commercial development to the north. In addition, because the project site is located in a Noise Hazard Overlay District interior noise levels shall not exceed 55 dBA $L_{eq}$ for commercial uses.

### Off-site Traffic Noise

The project would add vehicular traffic to both Yucaipa Boulevard and Avenue E. For purposes of this analysis, a significant impact would occur if project-related traffic increases noise levels at nearby sensitive receptors by 5 dB, which is a perceptible noise increase. Although individuals' reactions to changes in noise vary, empirical studies have shown people begin to notice changes in environmental noise levels of around 5 dBA. Thus, average changes in noise levels less than 5 dBA cannot be considered as producing adverse impacts because changes of that magnitude are imperceptible by the vast majority of persons (USEPA 1974).

## 3.3 Impact Analysis

### 3.3.1 Construction Noise

The nearest receivers include single-family residences located adjacent to the project site to the south of Area A and single-family residences approximately 50 feet east of the project site Area A across 18$^{th}$ Street. In addition, the Lighthouse Pentecostal Church is located approximately 500 feet south of the project site. While the project site is adjacent to existing residential properties to the south, construction equipment would be continuously moving across the site coming near and then moving further away from individual receivers, due to the dynamic nature of construction maximum hourly noise levels are calculated from the center of the site. The residential receivers south of the project site would be as near as 100 feet and as far as 1,000 feet; this would result in an average distance of 450 feet from construction activity. However construction noise was conservatively analyzed at 100 feet.

As discussed in the methodology, the FHWA RCNM was used to calculate noise associated with construction equipment. Maximum hourly noise levels are calculated to be 83 $L_{eq}$ at 50 feet, as measured from the center of the construction site or activity. At 100 feet from these activities, i.e., the southern property line and at the residences south of the project site, noise levels would attenuate to approximately 77 dBA $L_{eq}$. RCNM Calculations are included in Appendix B. Although project construction would occur within the hours specified in the Yucaipa Municipal Code, construction noise would be perceptible at nearby receivers, including residences and the Lighthouse Pentecostal Church, and thus the project would require noise abatement measures. Noise recommendations are discussed in Section 3.3, *Recommendations and Conclusions*.

### 3.3.2 Land Use Compatibility

The relationship between peak hourly $L_{eq}$ values and associated DNL values depends on the distribution of traffic over the entire day. There is no precise way to convert a peak hourly $L_{eq}$ to DNL. However, in urban areas near heavy traffic, the peak hourly $L_{eq}$ is typically 2-4 dBA lower than the daily DNL. In less heavily developed areas, such as suburban areas, the peak hourly $L_{eq}$ is often roughly equal to the daily DNL. For rural areas with little nighttime traffic, the peak hourly $L_{eq}$ value will often be 3-4 dBA greater than the daily DNL value (SWRCB 1999). The project site is located in a suburban area; therefore, the daily DNL value would be equal to the peak hourly $L_{eq}$ value.

To determine ambient noise levels at the project site, Rincon collected three 15-minute noise measurements. The project would introduce a new commercial use on the project site that would be exposed to existing ambient noise levels. Ambient noise on Area A was measured as loud as 68 dBA $L_{eq}$ and noise at Area C was measured as loud as 70 dBA $L_{eq}$. Therefore, the DNL at Area A and C is 68 DNL and 70 DNL, respectively. Standard construction techniques required under the California

Building Code typically achieve a minimum 25-dBA reduction from exterior sources at interior locations, when the windows are in a closed position. Thus, interior noise levels for the project would be 43 DNL at Area C and 45 DNL at Area A. The project would not exceed the City's interior noise standard of 50 DNL.

## 3.3.3 Operational Noise Sources

### On-Site Operational Noise

The project would result in commercial uses on the site that may periodically subject existing land uses in the project vicinity to noise associated with operation of the project, which includes the car wash, HVAC, fast-food restaurants, and parking lot noise.

#### *Parking Lot Noise*

The closest on-site parking stall is located approximately 50 feet to the nearest residential property line to the south. Parking lot activity is assumed to generate instantaneous noise levels up to 63 dBA $L_{max}$ at 100 feet from the source (Gordon Bricken & Associates 1996). Based on an attenuation rate of 6 dBA per doubling of distance, the nearest residential property to the north of the project site would be exposed to noise levels up to 71 dBA $L_{max}$ at 50 feet from the source. Parking lot noise levels would exceed the City's daytime and nighttime noise standards for residential land uses, but would not exceed the standard by more than the allowable 20 dB as specified in Section 87.0905(b)(1) of the Yucaipa Municipal Code. In addition, peak noise levels from parking lot noise would be intermittent when averaged over a one hour period and would be much lower than the existing noise levels in the project vicinity, which are dominated by traffic noise. Therefore, parking lot noise from the project would not be expected to substantially increase existing noise levels at nearby receptors, and would not result in a significant increase in ambient noise levels.

#### *Drive-through Noise*

Operation of the project would generate noise through the idling of cars waiting in drive-through lines. The nearest residential property line to idling cars on the project site is located approximately 350 feet northeast of the fast-food restaurant drive-thru lane located in Area C. Idling vehicles are assumed to produce 54 dBA Lmax at a distance of 30 feet from the source (Illingworth & Rodkin, Inc. 2010). With an average noise attenuation of 6 dBA per doubling of distance, idling vehicles on the project site would generate a noise level of approximately 33 dBA Lmax at the nearest residential property line. This noise level is below the City's daytime and nighttime noise standard of 55 dBA for residential land uses. In addition, peak noise levels from idling would be intermittent when averaged over a one hour period and would be much lower. Therefore, noise from idling vehicles would not substantially increase ambient noise at nearby noise sensitive receptors.

Operation of the project would generate noise placement of orders by customers at a microphone at the fast-food drive-throughs. The nearest residential property line to an on-site speaker associated with the proposed fast-food drive-through restaurants is located approximately 350 feet northeast of the fast-food restaurant drive-thru lane located in Area C. The placements of drive-thru orders at a speaker box are assumed to produce 65 dBA Lmax at a distance of 30 feet from the source (Illingworth & Rodkin, Inc. 2010). With an average noise attenuation of 6 dBA per doubling of distance, speaker box noise on the project site would generate a noise level of approximately 43 dBA Lmax at the nearest residential property line. This noise level is below the City's daytime and nighttime noise standard of 55 dBA for residential land uses. In addition, peak noise levels from the

speaker box would be intermittent when averaged over a one hour period and would be much lower. Therefore, noise from speaker boxes at drive-through restaurants would not substantially increase ambient noise at nearby noise sensitive receptors.

### *Car Wash and HVAC Noise*

Noise sources associated with operation of the project would include car wash and HVAC equipment. As a worst case scenario all HVAC and the carwash system were modeled operating at 100 percent. On-site operational noise level contours are provided in Figure 5 for car wash noise, Figure 6 for HVAC noise, and Figure 7 for combined operational noise levels. As shown in Figure 7 and Table 5 noise levels with both HVAC and the car wash active during the same hour would not exceed the City noise level limits of 55 dBA $L_{eq}$ at residential property lines or 60 dBA $L_{eq}$ at nearby commercial property lines. Standard construction techniques required under the California Building Code typically achieve a minimum 25-dBA reduction from exterior sources at interior locations, when the windows are in a closed position. Thus, interior noise levels for the project from proposed operational uses would not exceed 55 dBA $L_{eq}$. Future on-site noise sources would be consistent with City standards.

## Table 5 On-Site Noise Model Summary

| Receiver[1] | HVAC Noise (dBA Leq) | Car Wash Noise (dBA Leq) | Combined Noise (HVAC plus Car Wash) |
|---|---|---|---|
| 1 | 39.5 | 29.9 | 39.9 |
| 2 | 37.1 | 27.1 | 37.5 |
| 3 | 40.4 | 31.3 | 41.0 |
| 4 | 39.8 | 34.2 | 40.8 |
| 5 | 37.4 | 34.9 | 39.3 |
| 6 | 35.4 | 32.6 | 37.2 |
| 7 | 33.7 | 29.8 | 35.2 |
| 8 | 33.2 | 29.3 | 34.7 |
| 9 | 34.3 | 27.8 | 35.2 |
| 10 | 35.0 | 30.1 | 36.2 |
| 11 | 35.2 | 25.5 | 35.6 |
| 12 | 35.4 | 26.3 | 35.9 |
| 13 | 36.2 | 27.0 | 36.7 |
| 14 | 37.7 | 27.4 | 38.1 |
| 15 | 39.6 | 32.1 | 40.3 |
| 16 | 40.6 | 33.4 | 41.3 |
| 17 | 40.7 | 33.6 | 41.5 |
| 18 | 40.5 | 33.7 | 41.4 |
| 19 | 40.5 | 39.7 | 43.1 |
| 20 | 40.1 | 35.6 | 41.4 |
| 21 | 39.4 | 38.9 | 42.2 |
| 22 | 40.3 | 37.6 | 42.2 |
| 23 | 36.7 | 46.7 | 47.1 |
| 24 | 39.5 | 44.8 | 45.9 |
| 25 | 41.1 | 38.3 | 42.9 |
| 26 | 40.0 | 33.6 | 40.9 |
| 27 | 39.7 | 31.8 | 40.4 |
| 28 | 39.2 | 30.8 | 39.8 |
| 29 | 39.2 | 30.2 | 39.7 |
| 30 | 39.2 | 29.3 | 39.6 |
| 31 | 37.5 | 28.3 | 38.0 |
| 32 | 36.2 | 27.6 | 36.8 |
| 33 | 35.3 | 27.2 | 35.9 |
| 34 | 33.2 | 26.2 | 34.0 |
| 35 | 37.6 | 23.9 | 37.7 |
| 36 | 42.9 | 22.6 | 42.9 |
| 37 | 40.0 | 23.7 | 40.1 |
| 38 | 37.5 | 29.9 | 38.2 |
| 39 | 34.3 | 31.9 | 36.3 |

[1] Refer to Figures 5 through 7 for receiver locations

## Figure 5 Car Wash Noise

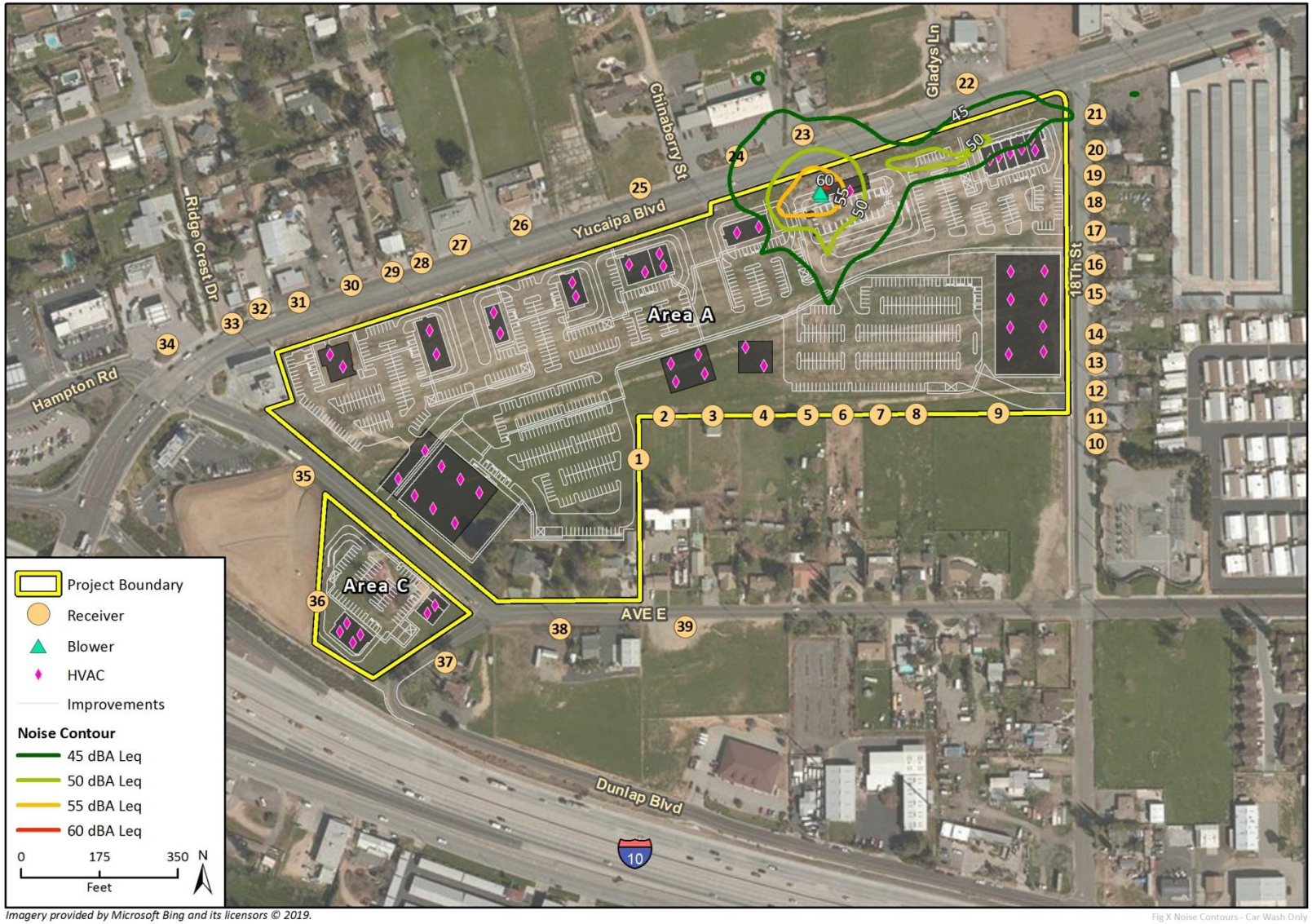


*Imagery provided by Microsoft Bing and its licensors © 2019.*

Fig X Noise Contours - Car Wash Only

**Figure 6 HVAC Noise**

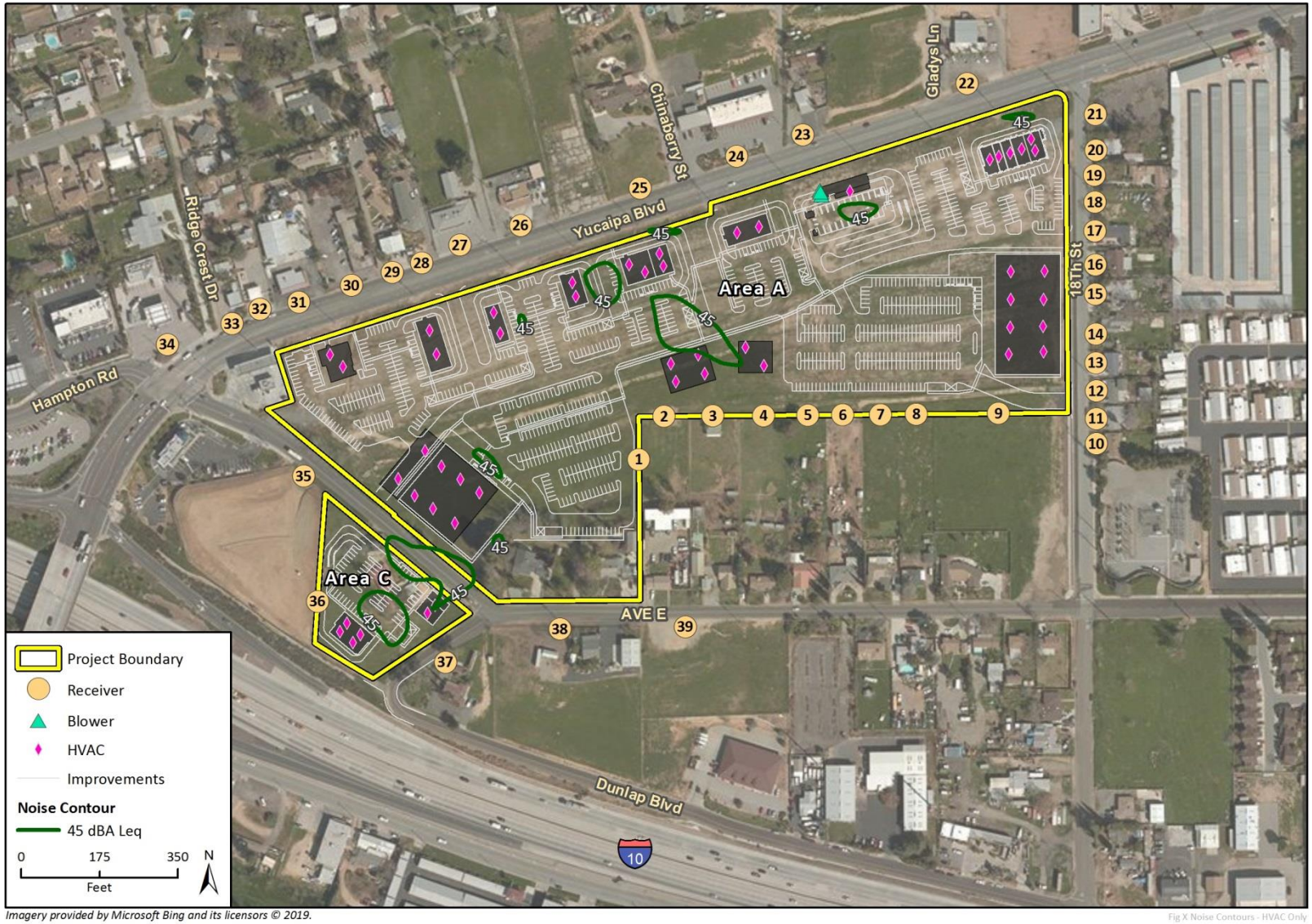


*Imagery provided by Microsoft Bing and its licensors © 2019.*

Fig X Noise Contours - HVAC Only

## Figure 7 Combined Operational Noise – Car Wash and HVAC

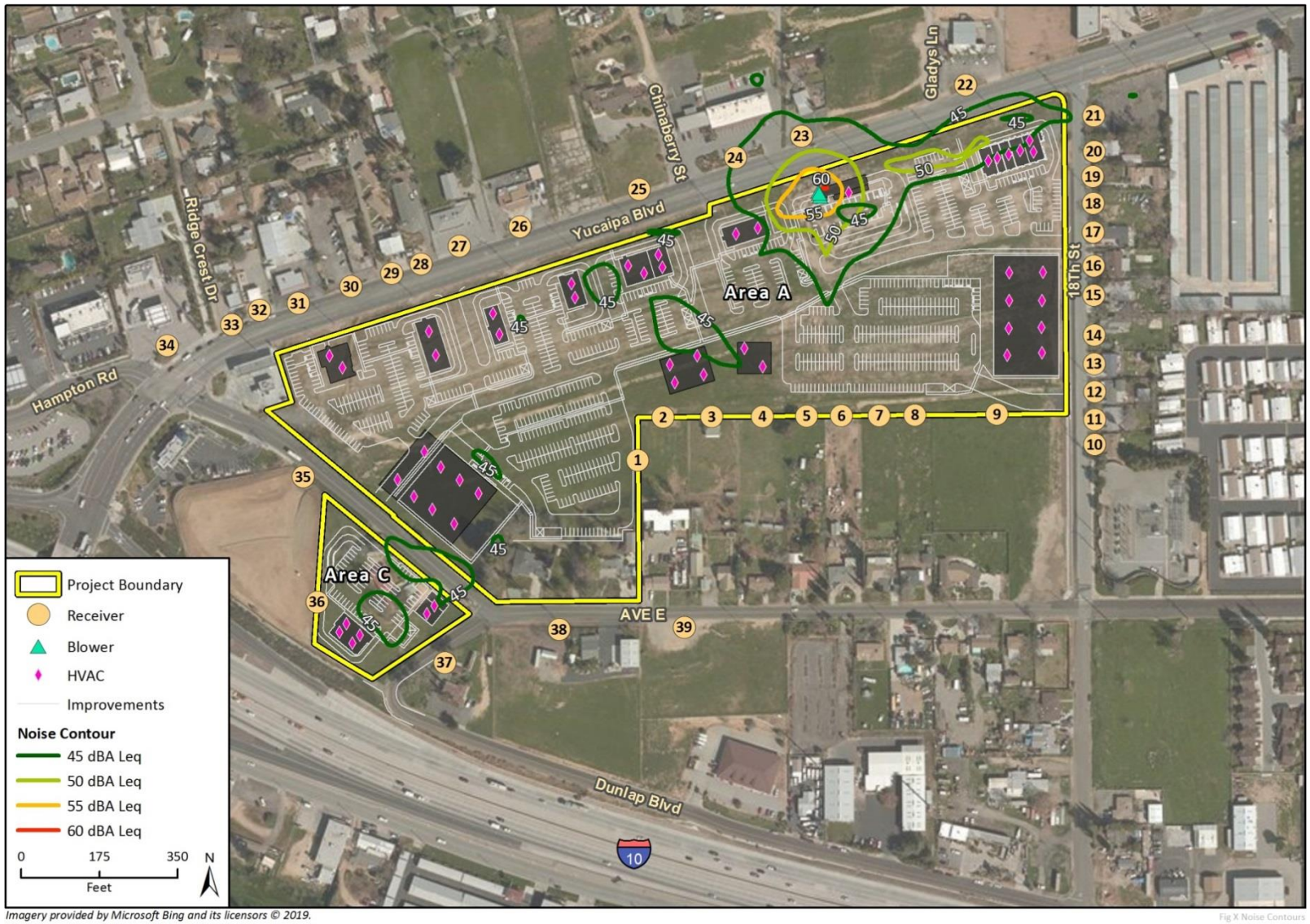


*Imagery provided by Microsoft Bing and its licensors © 2019.*

Fig X Noise Contours

## Off-site Traffic Noise

The project would generate new vehicle trips that would use area roadways. As discussed in project-specific Traffic Impact Assessment, the project would generate an estimated 24,179 ADT (IBI Group 2019, see Appendix D). Table 6 shows the existing and future increase in roadway traffic and the associated noise increase. Project traffic on area roadways would increase noise from 0 to 4 dBA. Proposed off-site traffic would not increase ambient noise levels beyond 5 dBA. Therefore, the increase is project related traffic would not be perceptible at nearby sensitive receivers.

## Table 6 Project Traffic

| Roadway Segment | Existing 2018 Traffic (ADT) [1] | Existing 2018 plus Project Traffic (2018) [2] | Future Year 2020 Traffic (ADT) [3] | Future Year plus Project 2020Traffic (ADT) [4] | Traffic Increase 2018 (ADT) [2-1] | Traffic Increase 2020 (ADT) [3-4] | Existing Noise Increase (dBA) 2018 | Future Noise Increase (dBA) 2020 |
|---|---|---|---|---|---|---|---|---|
| Yucaipa Blvd. – WB I-10 Ramp to Avenue E | 23,618 | 35,736 | 24,327 | 36,445 | 12,118 | 12,118 | 2 | 2 |
| Yucaipa Blvd. – Avenue E to Knollhaven Ln. | 20,664 | 29,980 | 21,284 | 30,600 | 9,316 | 9,316 | 2 | 2 |
| Yucaipa Blvd. – 18th Street to 17th Street | 19,926 | 27,198 | 20,524 | 27,796 | 7,272 | 7,272 | 1 | 1 |
| Avenue E – Yucaipa Blvd. to Dunlap Blvd. | 6,619 | 10,972 | 6,818 | 11,171 | 4,353 | 4,353 | 2 | 2 |
| Dunlap Blvd. – South to Avenue E | 1,205 | 1,689 | 1,251 | 1,725 | 484 | 474 | 1 | 1 |
| Avenue E – Dunlap Blvd. to 18th 4Street | 2,239 | 3,935 | 2,306 | 4,002 | 1,696 | 1,696 | 2 | 2 |
| Avenue E – 18th Street to 17th Street | 2,267 | 5,417 | 2,335 | 5,485 | 3,150 | 3,150 | 4 | 4 |
| I-10 South of Yucaipa Blvd. | 123,000 | 126,690 | 126,690 | 129,114 | 2,424 | 2,424 | 0 | 0 |
| I-10 North of Yucaipa Blvd. | 151,000 | 155,530 | 155,530 | 160,378 | 4,848 | 4,848 | 0 | 0 |

Source: IBI Group, see Appendix D

## 3.4 Recommendations and Conclusions

Construction of the project would generate short-term noise. To avoid conflict with City noise regulations (Section 87.0905[b] of the Yucaipa Municipal Code), it is recommended that construction adhere to the City's allowable construction hours and not occur between 7:00 a.m. and 7:00 p.m. on weekdays and Saturday, with no construction occurring on Sundays and implement the construction noise reduction measures as shown below.

### Construction Noise Recommendation

The following measures should be followed during project construction:

- **Mufflers.** During all project site excavation and grading, all construction equipment, fixed or mobile, should be operated with closed engine doors and should be equipped with properly operating and maintained mufflers consistent with manufacturers' standards.
- **Stationary Equipment.** All stationary construction equipment should be placed so that emitted noise is directed away from the nearest sensitive receptors.
- **Equipment Staging Areas.** Equipment staging should be located in areas that will create the greatest distance feasible between construction-related noise sources and noise-sensitive receptors.
- **Electrically-Powered Tools and Facilities.** Electrical power should be used to run air compressors and similar power tools and to power any temporary structures, such as construction trailers or caretaker facilities.
- **Smart Back-up Alarms.** Mobile construction equipment shall have smart back-up alarms that automatically adjust the sound level of the alarm in response to ambient noise levels. Alternatively, back-up alarms should be disabled and replaced with human spotters to ensure safety when mobile construction equipment is moving in the reverse direction.

On-site operational noise from HVAC, car wash, parking lot, and drive-through noise would not exceed the City's exterior or interior noise standards for residential or commercial uses. The project would not conflict with the land use compatibility standards contained in the Yucaipa General Plan. In addition, the off-site traffic noise would not be perceptible at nearby sensitive land uses.

# 4 References

California Department of Transportation (Caltrans). 2013a. *Technical Noise Supplement to the Traffic Noise Analysis Protocol*. (CT-HWANP-RT-13-069.25.2) September. Available at: http://www.dot.ca.gov/hq/env/noise/pub/TeNS_Sept_2013B.pdf

_____. 2013b. *Transportation and Construction Vibration Guidance Manual*.(CT-HWANP-RT-13-069.25.3) September. Available at: http://www.dot.ca.gov/hq/env/noise/pub/TCVGM_Sep13_FINAL.pdf

_____. 2016. *Average Daily Truck Traffic on the California State Highway System*. Compiled by the Traffic Data Branch. Available at: http://www.dot.ca.gov/trafficops/census/docs/2016_aadt_truck.pdf

California State Water Resources Control Board (SWRCB). 1999. General Waste Discharge Requirements for Biosolids Land Application Draft Statewide Program EIR – Appendix G. Background Information on Acoustics. Available at: http://www.waterboards.ca.gov/water_issues/programs/biosolids/deir/appendices/app_g.pdf

Federal Highway Administration (FHWA). 2006. *FHWA Highway Construction Noise Handbook*. (FHWAHEP-06-015; DOT-VNTSC-FHWA-06-02). Available at: http://www.fhwa.dot.gov/environment/construction_noise/handbook. Accessed November 2018.

_____. 2011. *Highway Traffic Noise: Analysis and Abatement Guidance* (FHWA-HEP-10-025). Available at: https://www.fhwa.dot.gov/environment/noise/regulations_and_guidance/analysis_and_abatement_guidance/revguidance.pdf

Federal Transit Administration (FTA). 2018. *Transit Noise and Vibration Impact Assessment*. November. Available at: https://www.transit.dot.gov/sites/fta.dot.gov/files/docs/research-innovation/118131/transit-noise-and-vibration-impact-assessment-manual-fta-report-no-0123_0.pdf

Gordon Bricken & Associates. 1996. Acoustical Analysis Addendum to the Adopted EIR Disneyland Resort City of Anaheim. Table 16: Reference Parking Lot Levels, p. 38. February 26, 1996

Illingworth & Rodkin, Inc. 2010. In-N-Out Burger, North Main Street Environmental Noise Assessment. Available: http://www.ci.pleasant-hill.ca.us/DocumentCenter/Home/View/3978

Lawrence E. Kinsler and R. Frey, Austin and B. Coppens, Alan and V. Sanders, James. Fundamentals of Acoustics, 4th Edition. ISBN 0-471-84789-5. Wiley-VCH, December 1999.

Malcolm J. Crocker (Editor). 2007. Handbook of Noise and Vibration Control Book, ISBN: 978-0-471-39599-7, Wiley-VCH, October.

U.S. Environmental Protection Agency. 1974. Information on Levels of Environmental Noise Requisite to Protect Public Health and Welfare With and Adequate Margin of Safety. Office of Noise Abatement and Control.

Yucaipa, City of. 2019. Yucaipa Municipal Code. Section 87.0905 Noise. http://www.qcode.us/codes/yucaipa/

# Appendix A

Noise Measurement Data

Noise Measurement 1

- Freq Weight : A
- Time Weight : FAST
- Level Range : 40-100
- Max dB : 81.2 - 2019/02/06 08:41:50
- Level Range : 40-100
- SEL : 97.5
- Leq : 68.0
-

| No.s | Date Time | (dB) |
|---|---|---|
| 1 | 2019/02/06 08:29:29 | 70.6 |
| 2 | 2019/02/06 08:29:30 | 69.9 |
| 3 | 2019/02/06 08:29:31 | 67.5 |
| 4 | 2019/02/06 08:29:32 | 66.3 |
| 5 | 2019/02/06 08:29:33 | 64.5 |
| 6 | 2019/02/06 08:29:34 | 64.7 |
| 7 | 2019/02/06 08:29:35 | 66.7 |
| 8 | 2019/02/06 08:29:36 | 67.7 |
| 9 | 2019/02/06 08:29:37 | 69.0 |
| 10 | 2019/02/06 08:29:38 | 71.5 |
| 11 | 2019/02/06 08:29:39 | 77.6 |
| 12 | 2019/02/06 08:29:40 | 76.2 |
| 13 | 2019/02/06 08:29:41 | 72.1 |
| 14 | 2019/02/06 08:29:42 | 68.0 |
| 15 | 2019/02/06 08:29:43 | 66.1 |
| 16 | 2019/02/06 08:29:44 | 63.1 |
| 17 | 2019/02/06 08:29:45 | 62.6 |
| 18 | 2019/02/06 08:29:46 | 60.4 |
| 19 | 2019/02/06 08:29:47 | 59.7 |
| 20 | 2019/02/06 08:29:48 | 60.8 |
| 21 | 2019/02/06 08:29:49 | 61.2 |
| 22 | 2019/02/06 08:29:50 | 61.9 |
| 23 | 2019/02/06 08:29:51 | 64.3 |
| 24 | 2019/02/06 08:29:52 | 64.2 |
| 25 | 2019/02/06 08:29:53 | 63.2 |
| 26 | 2019/02/06 08:29:54 | 60.0 |
| 27 | 2019/02/06 08:29:55 | 58.8 |
| 28 | 2019/02/06 08:29:56 | 61.5 |
| 29 | 2019/02/06 08:29:57 | 64.7 |
| 30 | 2019/02/06 08:29:58 | 68.3 |
| 31 | 2019/02/06 08:29:59 | 66.2 |
| 32 | 2019/02/06 08:30:00 | 64.2 |
| 33 | 2019/02/06 08:30:01 | 60.1 |
| 34 | 2019/02/06 08:30:02 | 58.6 |
| 35 | 2019/02/06 08:30:03 | 56.9 |
| 36 | 2019/02/06 08:30:04 | 56.6 |
| 37 | 2019/02/06 08:30:05 | 57.4 |
| 38 | 2019/02/06 08:30:06 | 54.5 |
| 39 | 2019/02/06 08:30:07 | 52.3 |
| 40 | 2019/02/06 08:30:08 | 50.5 |
| 41 | 2019/02/06 08:30:09 | 50.4 |
| 42 | 2019/02/06 08:30:10 | 49.7 |
| 43 | 2019/02/06 08:30:11 | 49.2 |
| 44 | 2019/02/06 08:30:12 | 48.9 |
| 45 | 2019/02/06 08:30:13 | 49.4 |
| 46 | 2019/02/06 08:30:14 | 49.5 |
| 47 | 2019/02/06 08:30:15 | 47.9 |
| 48 | 2019/02/06 08:30:16 | 48.7 |
| 49 | 2019/02/06 08:30:17 | 48.8 |
| 50 | 2019/02/06 08:30:18 | 50.1 |
| 51 | 2019/02/06 08:30:19 | 50.3 |
| 52 | 2019/02/06 08:30:20 | 52.8 |
| 53 | 2019/02/06 08:30:21 | 54.1 |
| 54 | 2019/02/06 08:30:22 | 54.8 |
| 55 | 2019/02/06 08:30:23 | 57.3 |
| 56 | 2019/02/06 08:30:24 | 60.5 |
| 57 | 2019/02/06 08:30:25 | 63.5 |
| 58 | 2019/02/06 08:30:26 | 68.7 |
| 59 | 2019/02/06 08:30:27 | 69.2 |
| 60 | 2019/02/06 08:30:28 | 66.3 |
| 61 | 2019/02/06 08:30:29 | 62.9 |
| 62 | 2019/02/06 08:30:30 | 62.6 |
| 63 | 2019/02/06 08:30:31 | 64.7 |
| 64 | 2019/02/06 08:30:32 | 66.9 |
| 65 | 2019/02/06 08:30:33 | 67.7 |
| 66 | 2019/02/06 08:30:34 | 70.0 |
| 67 | 2019/02/06 08:30:35 | 72.1 |
| 68 | 2019/02/06 08:30:36 | 69.9 |
| 69 | 2019/02/06 08:30:37 | 72.4 |
| 70 | 2019/02/06 08:30:38 | 72.5 |
| 71 | 2019/02/06 08:30:39 | 72.6 |
| 72 | 2019/02/06 08:30:40 | 70.5 |
| 73 | 2019/02/06 08:30:41 | 71.1 |
| 74 | 2019/02/06 08:30:42 | 71.3 |
| 75 | 2019/02/06 08:30:43 | 72.7 |
| 76 | 2019/02/06 08:30:44 | 73.3 |
| 77 | 2019/02/06 08:30:45 | 72.9 |
| 78 | 2019/02/06 08:30:46 | 70.7 |
| 79 | 2019/02/06 08:30:47 | 70.2 |
| 80 | 2019/02/06 08:30:48 | 71.7 |
| 81 | 2019/02/06 08:30:49 | 71.2 |
| 82 | 2019/02/06 08:30:50 | 67.9 |
| 83 | 2019/02/06 08:30:51 | 67.7 |
| 84 | 2019/02/06 08:30:52 | 70.2 |
| 85 | 2019/02/06 08:30:53 | 72.9 |

| | | | |
|---|---|---|---|
| 86 | 2019/02/06 | 08:30:54 | 73.5 |
| 87 | 2019/02/06 | 08:30:55 | 71.1 |
| 88 | 2019/02/06 | 08:30:56 | 66.8 |
| 89 | 2019/02/06 | 08:30:57 | 63.9 |
| 90 | 2019/02/06 | 08:30:58 | 61.6 |
| 91 | 2019/02/06 | 08:30:59 | 60.8 |
| 92 | 2019/02/06 | 08:31:00 | 59.5 |
| 93 | 2019/02/06 | 08:31:01 | 57.6 |
| 94 | 2019/02/06 | 08:31:02 | 58.6 |
| 95 | 2019/02/06 | 08:31:03 | 61.1 |
| 96 | 2019/02/06 | 08:31:04 | 63.0 |
| 97 | 2019/02/06 | 08:31:05 | 66.6 |
| 98 | 2019/02/06 | 08:31:06 | 72.4 |
| 99 | 2019/02/06 | 08:31:07 | 74.9 |
| 100 | 2019/02/06 | 08:31:08 | 71.3 |
| 101 | 2019/02/06 | 08:31:09 | 66.9 |
| 102 | 2019/02/06 | 08:31:10 | 63.4 |
| 103 | 2019/02/06 | 08:31:11 | 60.7 |
| 104 | 2019/02/06 | 08:31:12 | 59.7 |
| 105 | 2019/02/06 | 08:31:13 | 59.4 |
| 106 | 2019/02/06 | 08:31:14 | 61.3 |
| 107 | 2019/02/06 | 08:31:15 | 63.5 |
| 108 | 2019/02/06 | 08:31:16 | 68.1 |
| 109 | 2019/02/06 | 08:31:17 | 66.3 |
| 110 | 2019/02/06 | 08:31:18 | 63.0 |
| 111 | 2019/02/06 | 08:31:19 | 59.2 |
| 112 | 2019/02/06 | 08:31:20 | 60.8 |
| 113 | 2019/02/06 | 08:31:21 | 64.1 |
| 114 | 2019/02/06 | 08:31:22 | 67.5 |
| 115 | 2019/02/06 | 08:31:23 | 66.2 |
| 116 | 2019/02/06 | 08:31:24 | 65.0 |
| 117 | 2019/02/06 | 08:31:25 | 62.0 |
| 118 | 2019/02/06 | 08:31:26 | 64.6 |
| 119 | 2019/02/06 | 08:31:27 | 66.7 |
| 120 | 2019/02/06 | 08:31:28 | 64.4 |
| 121 | 2019/02/06 | 08:31:29 | 63.0 |
| 122 | 2019/02/06 | 08:31:30 | 62.1 |
| 123 | 2019/02/06 | 08:31:31 | 65.1 |
| 124 | 2019/02/06 | 08:31:32 | 66.2 |
| 125 | 2019/02/06 | 08:31:33 | 68.3 |
| 126 | 2019/02/06 | 08:31:34 | 67.7 |
| 127 | 2019/02/06 | 08:31:35 | 67.5 |
| 128 | 2019/02/06 | 08:31:36 | 69.5 |
| 129 | 2019/02/06 | 08:31:37 | 68.5 |
| 130 | 2019/02/06 | 08:31:38 | 66.3 |
| 131 | 2019/02/06 | 08:31:39 | 62.9 |
| 132 | 2019/02/06 | 08:31:40 | 59.9 |
| 133 | 2019/02/06 | 08:31:41 | 58.3 |
| 134 | 2019/02/06 | 08:31:42 | 58.1 |
| 135 | 2019/02/06 | 08:31:43 | 57.3 |
| 136 | 2019/02/06 | 08:31:44 | 56.6 |
| 137 | 2019/02/06 | 08:31:45 | 54.8 |
| 138 | 2019/02/06 | 08:31:46 | 54.3 |
| 139 | 2019/02/06 | 08:31:47 | 54.6 |
| 140 | 2019/02/06 | 08:31:48 | 57.1 |
| 141 | 2019/02/06 | 08:31:49 | 60.1 |
| 142 | 2019/02/06 | 08:31:50 | 63.9 |
| 143 | 2019/02/06 | 08:31:51 | 68.1 |
| 144 | 2019/02/06 | 08:31:52 | 71.2 |
| 145 | 2019/02/06 | 08:31:53 | 70.4 |
| 146 | 2019/02/06 | 08:31:54 | 67.9 |
| 147 | 2019/02/06 | 08:31:55 | 66.5 |
| 148 | 2019/02/06 | 08:31:56 | 63.5 |
| 149 | 2019/02/06 | 08:31:57 | 63.4 |
| 150 | 2019/02/06 | 08:31:58 | 64.5 |
| 151 | 2019/02/06 | 08:31:59 | 63.9 |
| 152 | 2019/02/06 | 08:32:00 | 64.5 |
| 153 | 2019/02/06 | 08:32:01 | 65.8 |
| 154 | 2019/02/06 | 08:32:02 | 64.6 |
| 155 | 2019/02/06 | 08:32:03 | 63.9 |
| 156 | 2019/02/06 | 08:32:04 | 63.6 |
| 157 | 2019/02/06 | 08:32:05 | 62.3 |
| 158 | 2019/02/06 | 08:32:06 | 61.4 |
| 159 | 2019/02/06 | 08:32:07 | 61.2 |
| 160 | 2019/02/06 | 08:32:08 | 62.5 |
| 161 | 2019/02/06 | 08:32:09 | 65.0 |
| 162 | 2019/02/06 | 08:32:10 | 66.0 |
| 163 | 2019/02/06 | 08:32:11 | 65.0 |
| 164 | 2019/02/06 | 08:32:12 | 64.0 |
| 165 | 2019/02/06 | 08:32:13 | 63.4 |
| 166 | 2019/02/06 | 08:32:14 | 64.7 |
| 167 | 2019/02/06 | 08:32:15 | 64.0 |
| 168 | 2019/02/06 | 08:32:16 | 63.6 |
| 169 | 2019/02/06 | 08:32:17 | 62.5 |
| 170 | 2019/02/06 | 08:32:18 | 60.1 |
| 171 | 2019/02/06 | 08:32:19 | 59.0 |
| 172 | 2019/02/06 | 08:32:20 | 58.7 |
| 173 | 2019/02/06 | 08:32:21 | 57.3 |
| 174 | 2019/02/06 | 08:32:22 | 58.4 |
| 175 | 2019/02/06 | 08:32:23 | 60.8 |
| 176 | 2019/02/06 | 08:32:24 | 64.7 |
| 177 | 2019/02/06 | 08:32:25 | 68.4 |
| 178 | 2019/02/06 | 08:32:26 | 70.4 |
| 179 | 2019/02/06 | 08:32:27 | 75.1 |
| 180 | 2019/02/06 | 08:32:28 | 72.0 |
| 181 | 2019/02/06 | 08:32:29 | 67.8 |
| 182 | 2019/02/06 | 08:32:30 | 63.9 |
| 183 | 2019/02/06 | 08:32:31 | 62.9 |
| 184 | 2019/02/06 | 08:32:32 | 62.2 |

| | | | |
|---|---|---|---|
| 185 | 2019/02/06 | 08:32:33 | 63.6 |
| 186 | 2019/02/06 | 08:32:34 | 66.9 |
| 187 | 2019/02/06 | 08:32:35 | 68.4 |
| 188 | 2019/02/06 | 08:32:36 | 65.5 |
| 189 | 2019/02/06 | 08:32:37 | 59.5 |
| 190 | 2019/02/06 | 08:32:38 | 57.9 |
| 191 | 2019/02/06 | 08:32:39 | 55.0 |
| 192 | 2019/02/06 | 08:32:40 | 50.6 |
| 193 | 2019/02/06 | 08:32:41 | 51.5 |
| 194 | 2019/02/06 | 08:32:42 | 51.2 |
| 195 | 2019/02/06 | 08:32:43 | 50.4 |
| 196 | 2019/02/06 | 08:32:44 | 55.2 |
| 197 | 2019/02/06 | 08:32:45 | 57.1 |
| 198 | 2019/02/06 | 08:32:46 | 56.4 |
| 199 | 2019/02/06 | 08:32:47 | 60.2 |
| 200 | 2019/02/06 | 08:32:48 | 62.4 |
| 201 | 2019/02/06 | 08:32:49 | 65.2 |
| 202 | 2019/02/06 | 08:32:50 | 69.2 |
| 203 | 2019/02/06 | 08:32:51 | 72.0 |
| 204 | 2019/02/06 | 08:32:52 | 72.0 |
| 205 | 2019/02/06 | 08:32:53 | 67.9 |
| 206 | 2019/02/06 | 08:32:54 | 67.2 |
| 207 | 2019/02/06 | 08:32:55 | 68.4 |
| 208 | 2019/02/06 | 08:32:56 | 66.0 |
| 209 | 2019/02/06 | 08:32:57 | 64.5 |
| 210 | 2019/02/06 | 08:32:58 | 63.7 |
| 211 | 2019/02/06 | 08:32:59 | 65.1 |
| 212 | 2019/02/06 | 08:33:00 | 72.8 |
| 213 | 2019/02/06 | 08:33:01 | 77.0 |
| 214 | 2019/02/06 | 08:33:02 | 67.2 |
| 215 | 2019/02/06 | 08:33:03 | 65.4 |
| 216 | 2019/02/06 | 08:33:04 | 69.3 |
| 217 | 2019/02/06 | 08:33:05 | 72.8 |
| 218 | 2019/02/06 | 08:33:06 | 72.7 |
| 219 | 2019/02/06 | 08:33:07 | 71.0 |
| 220 | 2019/02/06 | 08:33:08 | 70.3 |
| 221 | 2019/02/06 | 08:33:09 | 68.5 |
| 222 | 2019/02/06 | 08:33:10 | 64.7 |
| 223 | 2019/02/06 | 08:33:11 | 63.9 |
| 224 | 2019/02/06 | 08:33:12 | 65.1 |
| 225 | 2019/02/06 | 08:33:13 | 68.4 |
| 226 | 2019/02/06 | 08:33:14 | 67.1 |
| 227 | 2019/02/06 | 08:33:15 | 64.5 |
| 228 | 2019/02/06 | 08:33:16 | 62.3 |
| 229 | 2019/02/06 | 08:33:17 | 61.3 |
| 230 | 2019/02/06 | 08:33:18 | 62.0 |
| 231 | 2019/02/06 | 08:33:19 | 63.8 |
| 232 | 2019/02/06 | 08:33:20 | 63.7 |
| 233 | 2019/02/06 | 08:33:21 | 65.1 |
| 234 | 2019/02/06 | 08:33:22 | 67.8 |
| 235 | 2019/02/06 | 08:33:23 | 68.9 |
| 236 | 2019/02/06 | 08:33:24 | 69.0 |
| 237 | 2019/02/06 | 08:33:25 | 70.5 |
| 238 | 2019/02/06 | 08:33:26 | 73.6 |
| 239 | 2019/02/06 | 08:33:27 | 76.9 |
| 240 | 2019/02/06 | 08:33:28 | 76.8 |
| 241 | 2019/02/06 | 08:33:29 | 73.7 |
| 242 | 2019/02/06 | 08:33:30 | 71.2 |
| 243 | 2019/02/06 | 08:33:31 | 67.8 |
| 244 | 2019/02/06 | 08:33:32 | 66.8 |
| 245 | 2019/02/06 | 08:33:33 | 65.3 |
| 246 | 2019/02/06 | 08:33:34 | 63.8 |
| 247 | 2019/02/06 | 08:33:35 | 63.6 |
| 248 | 2019/02/06 | 08:33:36 | 64.7 |
| 249 | 2019/02/06 | 08:33:37 | 64.5 |
| 250 | 2019/02/06 | 08:33:38 | 64.3 |
| 251 | 2019/02/06 | 08:33:39 | 66.5 |
| 252 | 2019/02/06 | 08:33:40 | 68.6 |
| 253 | 2019/02/06 | 08:33:41 | 65.1 |
| 254 | 2019/02/06 | 08:33:42 | 60.4 |
| 255 | 2019/02/06 | 08:33:43 | 59.1 |
| 256 | 2019/02/06 | 08:33:44 | 58.1 |
| 257 | 2019/02/06 | 08:33:45 | 56.8 |
| 258 | 2019/02/06 | 08:33:46 | 56.4 |
| 259 | 2019/02/06 | 08:33:47 | 57.2 |
| 260 | 2019/02/06 | 08:33:48 | 59.6 |
| 261 | 2019/02/06 | 08:33:49 | 63.0 |
| 262 | 2019/02/06 | 08:33:50 | 61.5 |
| 263 | 2019/02/06 | 08:33:51 | 63.4 |
| 264 | 2019/02/06 | 08:33:52 | 63.7 |
| 265 | 2019/02/06 | 08:33:53 | 60.1 |
| 266 | 2019/02/06 | 08:33:54 | 59.3 |
| 267 | 2019/02/06 | 08:33:55 | 59.9 |
| 268 | 2019/02/06 | 08:33:56 | 61.3 |
| 269 | 2019/02/06 | 08:33:57 | 61.2 |
| 270 | 2019/02/06 | 08:33:58 | 61.1 |
| 271 | 2019/02/06 | 08:33:59 | 60.0 |
| 272 | 2019/02/06 | 08:34:00 | 57.5 |
| 273 | 2019/02/06 | 08:34:01 | 55.1 |
| 274 | 2019/02/06 | 08:34:02 | 55.8 |
| 275 | 2019/02/06 | 08:34:03 | 52.4 |
| 276 | 2019/02/06 | 08:34:04 | 53.5 |
| 277 | 2019/02/06 | 08:34:05 | 56.1 |
| 278 | 2019/02/06 | 08:34:06 | 53.7 |
| 279 | 2019/02/06 | 08:34:07 | 54.9 |
| 280 | 2019/02/06 | 08:34:08 | 59.3 |
| 281 | 2019/02/06 | 08:34:09 | 59.0 |
| 282 | 2019/02/06 | 08:34:10 | 60.5 |
| 283 | 2019/02/06 | 08:34:11 | 61.1 |

| | | | |
|---|---|---|---|
| 284 | 2019/02/06 | 08:34:12 | 61.7 |
| 285 | 2019/02/06 | 08:34:13 | 63.2 |
| 286 | 2019/02/06 | 08:34:14 | 61.1 |
| 287 | 2019/02/06 | 08:34:15 | 59.3 |
| 288 | 2019/02/06 | 08:34:16 | 57.6 |
| 289 | 2019/02/06 | 08:34:17 | 57.4 |
| 290 | 2019/02/06 | 08:34:18 | 57.1 |
| 291 | 2019/02/06 | 08:34:19 | 58.5 |
| 292 | 2019/02/06 | 08:34:20 | 61.5 |
| 293 | 2019/02/06 | 08:34:21 | 65.2 |
| 294 | 2019/02/06 | 08:34:22 | 67.8 |
| 295 | 2019/02/06 | 08:34:23 | 69.5 |
| 296 | 2019/02/06 | 08:34:24 | 68.0 |
| 297 | 2019/02/06 | 08:34:25 | 68.0 |
| 298 | 2019/02/06 | 08:34:26 | 67.1 |
| 299 | 2019/02/06 | 08:34:27 | 62.3 |
| 300 | 2019/02/06 | 08:34:28 | 59.1 |
| 301 | 2019/02/06 | 08:34:29 | 58.1 |
| 302 | 2019/02/06 | 08:34:30 | 58.2 |
| 303 | 2019/02/06 | 08:34:31 | 58.8 |
| 304 | 2019/02/06 | 08:34:32 | 59.2 |
| 305 | 2019/02/06 | 08:34:33 | 62.8 |
| 306 | 2019/02/06 | 08:34:34 | 65.1 |
| 307 | 2019/02/06 | 08:34:35 | 69.0 |
| 308 | 2019/02/06 | 08:34:36 | 68.3 |
| 309 | 2019/02/06 | 08:34:37 | 63.2 |
| 310 | 2019/02/06 | 08:34:38 | 60.5 |
| 311 | 2019/02/06 | 08:34:39 | 59.5 |
| 312 | 2019/02/06 | 08:34:40 | 60.5 |
| 313 | 2019/02/06 | 08:34:41 | 59.8 |
| 314 | 2019/02/06 | 08:34:42 | 61.5 |
| 315 | 2019/02/06 | 08:34:43 | 62.8 |
| 316 | 2019/02/06 | 08:34:44 | 63.8 |
| 317 | 2019/02/06 | 08:34:45 | 67.7 |
| 318 | 2019/02/06 | 08:34:46 | 65.8 |
| 319 | 2019/02/06 | 08:34:47 | 63.2 |
| 320 | 2019/02/06 | 08:34:48 | 59.5 |
| 321 | 2019/02/06 | 08:34:49 | 58.0 |
| 322 | 2019/02/06 | 08:34:50 | 58.2 |
| 323 | 2019/02/06 | 08:34:51 | 58.4 |
| 324 | 2019/02/06 | 08:34:52 | 57.2 |
| 325 | 2019/02/06 | 08:34:53 | 54.7 |
| 326 | 2019/02/06 | 08:34:54 | 53.5 |
| 327 | 2019/02/06 | 08:34:55 | 53.1 |
| 328 | 2019/02/06 | 08:34:56 | 55.3 |
| 329 | 2019/02/06 | 08:34:57 | 54.2 |
| 330 | 2019/02/06 | 08:34:58 | 53.9 |
| 331 | 2019/02/06 | 08:34:59 | 53.1 |
| 332 | 2019/02/06 | 08:35:00 | 53.3 |
| 333 | 2019/02/06 | 08:35:01 | 52.9 |
| 334 | 2019/02/06 | 08:35:02 | 53.8 |
| 335 | 2019/02/06 | 08:35:03 | 63.6 |
| 336 | 2019/02/06 | 08:35:04 | 51.7 |
| 337 | 2019/02/06 | 08:35:05 | 51.7 |
| 338 | 2019/02/06 | 08:35:06 | 52.9 |
| 339 | 2019/02/06 | 08:35:07 | 52.5 |
| 340 | 2019/02/06 | 08:35:08 | 51.5 |
| 341 | 2019/02/06 | 08:35:09 | 51.5 |
| 342 | 2019/02/06 | 08:35:10 | 50.5 |
| 343 | 2019/02/06 | 08:35:11 | 49.9 |
| 344 | 2019/02/06 | 08:35:12 | 50.1 |
| 345 | 2019/02/06 | 08:35:13 | 50.9 |
| 346 | 2019/02/06 | 08:35:14 | 54.3 |
| 347 | 2019/02/06 | 08:35:15 | 51.5 |
| 348 | 2019/02/06 | 08:35:16 | 50.8 |
| 349 | 2019/02/06 | 08:35:17 | 50.9 |
| 350 | 2019/02/06 | 08:35:18 | 52.2 |
| 351 | 2019/02/06 | 08:35:19 | 51.8 |
| 352 | 2019/02/06 | 08:35:20 | 54.5 |
| 353 | 2019/02/06 | 08:35:21 | 53.2 |
| 354 | 2019/02/06 | 08:35:22 | 51.2 |
| 355 | 2019/02/06 | 08:35:23 | 51.5 |
| 356 | 2019/02/06 | 08:35:24 | 53.5 |
| 357 | 2019/02/06 | 08:35:25 | 55.9 |
| 358 | 2019/02/06 | 08:35:26 | 58.0 |
| 359 | 2019/02/06 | 08:35:27 | 61.0 |
| 360 | 2019/02/06 | 08:35:28 | 65.0 |
| 361 | 2019/02/06 | 08:35:29 | 68.5 |
| 362 | 2019/02/06 | 08:35:30 | 68.8 |
| 363 | 2019/02/06 | 08:35:31 | 68.1 |
| 364 | 2019/02/06 | 08:35:32 | 68.5 |
| 365 | 2019/02/06 | 08:35:33 | 69.2 |
| 366 | 2019/02/06 | 08:35:34 | 70.8 |
| 367 | 2019/02/06 | 08:35:35 | 69.9 |
| 368 | 2019/02/06 | 08:35:36 | 70.4 |
| 369 | 2019/02/06 | 08:35:37 | 71.6 |
| 370 | 2019/02/06 | 08:35:38 | 69.9 |
| 371 | 2019/02/06 | 08:35:39 | 67.3 |
| 372 | 2019/02/06 | 08:35:40 | 67.4 |
| 373 | 2019/02/06 | 08:35:41 | 67.3 |
| 374 | 2019/02/06 | 08:35:42 | 68.1 |
| 375 | 2019/02/06 | 08:35:43 | 69.2 |
| 376 | 2019/02/06 | 08:35:44 | 68.9 |
| 377 | 2019/02/06 | 08:35:45 | 69.8 |
| 378 | 2019/02/06 | 08:35:46 | 68.3 |
| 379 | 2019/02/06 | 08:35:47 | 68.6 |
| 380 | 2019/02/06 | 08:35:48 | 70.6 |
| 381 | 2019/02/06 | 08:35:49 | 73.0 |
| 382 | 2019/02/06 | 08:35:50 | 75.0 |

| | | | |
|---|---|---|---|
| 383 | 2019/02/06 | 08:35:51 | 73.0 |
| 384 | 2019/02/06 | 08:35:52 | 68.7 |
| 385 | 2019/02/06 | 08:35:53 | 70.3 |
| 386 | 2019/02/06 | 08:35:54 | 70.6 |
| 387 | 2019/02/06 | 08:35:55 | 68.5 |
| 388 | 2019/02/06 | 08:35:56 | 67.0 |
| 389 | 2019/02/06 | 08:35:57 | 66.6 |
| 390 | 2019/02/06 | 08:35:58 | 65.5 |
| 391 | 2019/02/06 | 08:35:59 | 64.7 |
| 392 | 2019/02/06 | 08:36:00 | 64.6 |
| 393 | 2019/02/06 | 08:36:01 | 66.2 |
| 394 | 2019/02/06 | 08:36:02 | 62.9 |
| 395 | 2019/02/06 | 08:36:03 | 59.3 |
| 396 | 2019/02/06 | 08:36:04 | 57.6 |
| 397 | 2019/02/06 | 08:36:05 | 57.3 |
| 398 | 2019/02/06 | 08:36:06 | 58.8 |
| 399 | 2019/02/06 | 08:36:07 | 62.6 |
| 400 | 2019/02/06 | 08:36:08 | 66.0 |
| 401 | 2019/02/06 | 08:36:09 | 70.9 |
| 402 | 2019/02/06 | 08:36:10 | 72.0 |
| 403 | 2019/02/06 | 08:36:11 | 71.1 |
| 404 | 2019/02/06 | 08:36:12 | 69.1 |
| 405 | 2019/02/06 | 08:36:13 | 65.6 |
| 406 | 2019/02/06 | 08:36:14 | 63.2 |
| 407 | 2019/02/06 | 08:36:15 | 64.2 |
| 408 | 2019/02/06 | 08:36:16 | 67.1 |
| 409 | 2019/02/06 | 08:36:17 | 69.9 |
| 410 | 2019/02/06 | 08:36:18 | 71.6 |
| 411 | 2019/02/06 | 08:36:19 | 69.4 |
| 412 | 2019/02/06 | 08:36:20 | 64.4 |
| 413 | 2019/02/06 | 08:36:21 | 64.2 |
| 414 | 2019/02/06 | 08:36:22 | 66.0 |
| 415 | 2019/02/06 | 08:36:23 | 66.4 |
| 416 | 2019/02/06 | 08:36:24 | 67.1 |
| 417 | 2019/02/06 | 08:36:25 | 65.7 |
| 418 | 2019/02/06 | 08:36:26 | 63.9 |
| 419 | 2019/02/06 | 08:36:27 | 59.8 |
| 420 | 2019/02/06 | 08:36:28 | 57.5 |
| 421 | 2019/02/06 | 08:36:29 | 56.7 |
| 422 | 2019/02/06 | 08:36:30 | 53.8 |
| 423 | 2019/02/06 | 08:36:31 | 53.4 |
| 424 | 2019/02/06 | 08:36:32 | 53.5 |
| 425 | 2019/02/06 | 08:36:33 | 53.9 |
| 426 | 2019/02/06 | 08:36:34 | 53.3 |
| 427 | 2019/02/06 | 08:36:35 | 52.6 |
| 428 | 2019/02/06 | 08:36:36 | 51.5 |
| 429 | 2019/02/06 | 08:36:37 | 51.5 |
| 430 | 2019/02/06 | 08:36:38 | 51.9 |
| 431 | 2019/02/06 | 08:36:39 | 53.6 |
| 432 | 2019/02/06 | 08:36:40 | 53.9 |
| 433 | 2019/02/06 | 08:36:41 | 55.5 |
| 434 | 2019/02/06 | 08:36:42 | 56.1 |
| 435 | 2019/02/06 | 08:36:43 | 60.2 |
| 436 | 2019/02/06 | 08:36:44 | 62.2 |
| 437 | 2019/02/06 | 08:36:45 | 66.3 |
| 438 | 2019/02/06 | 08:36:46 | 68.9 |
| 439 | 2019/02/06 | 08:36:47 | 70.6 |
| 440 | 2019/02/06 | 08:36:48 | 70.6 |
| 441 | 2019/02/06 | 08:36:49 | 72.9 |
| 442 | 2019/02/06 | 08:36:50 | 74.8 |
| 443 | 2019/02/06 | 08:36:51 | 73.4 |
| 444 | 2019/02/06 | 08:36:52 | 71.8 |
| 445 | 2019/02/06 | 08:36:53 | 70.5 |
| 446 | 2019/02/06 | 08:36:54 | 70.6 |
| 447 | 2019/02/06 | 08:36:55 | 70.9 |
| 448 | 2019/02/06 | 08:36:56 | 69.0 |
| 449 | 2019/02/06 | 08:36:57 | 66.2 |
| 450 | 2019/02/06 | 08:36:58 | 66.6 |
| 451 | 2019/02/06 | 08:36:59 | 65.7 |
| 452 | 2019/02/06 | 08:37:00 | 63.8 |
| 453 | 2019/02/06 | 08:37:01 | 62.4 |
| 454 | 2019/02/06 | 08:37:02 | 63.0 |
| 455 | 2019/02/06 | 08:37:03 | 67.2 |
| 456 | 2019/02/06 | 08:37:04 | 71.6 |
| 457 | 2019/02/06 | 08:37:05 | 72.5 |
| 458 | 2019/02/06 | 08:37:06 | 68.1 |
| 459 | 2019/02/06 | 08:37:07 | 68.0 |
| 460 | 2019/02/06 | 08:37:08 | 66.9 |
| 461 | 2019/02/06 | 08:37:09 | 64.5 |
| 462 | 2019/02/06 | 08:37:10 | 66.5 |
| 463 | 2019/02/06 | 08:37:11 | 66.8 |
| 464 | 2019/02/06 | 08:37:12 | 70.6 |
| 465 | 2019/02/06 | 08:37:13 | 69.8 |
| 466 | 2019/02/06 | 08:37:14 | 69.6 |
| 467 | 2019/02/06 | 08:37:15 | 69.3 |
| 468 | 2019/02/06 | 08:37:16 | 67.3 |
| 469 | 2019/02/06 | 08:37:17 | 67.1 |
| 470 | 2019/02/06 | 08:37:18 | 66.3 |
| 471 | 2019/02/06 | 08:37:19 | 64.7 |
| 472 | 2019/02/06 | 08:37:20 | 65.6 |
| 473 | 2019/02/06 | 08:37:21 | 65.9 |
| 474 | 2019/02/06 | 08:37:22 | 67.1 |
| 475 | 2019/02/06 | 08:37:23 | 67.5 |
| 476 | 2019/02/06 | 08:37:24 | 65.4 |
| 477 | 2019/02/06 | 08:37:25 | 63.8 |
| 478 | 2019/02/06 | 08:37:26 | 63.4 |
| 479 | 2019/02/06 | 08:37:27 | 66.7 |
| 480 | 2019/02/06 | 08:37:28 | 66.9 |
| 481 | 2019/02/06 | 08:37:29 | 64.7 |

| | | | |
|---|---|---|---|
| 482 | 2019/02/06 | 08:37:30 | 66.1 |
| 483 | 2019/02/06 | 08:37:31 | 65.5 |
| 484 | 2019/02/06 | 08:37:32 | 64.2 |
| 485 | 2019/02/06 | 08:37:33 | 65.2 |
| 486 | 2019/02/06 | 08:37:34 | 65.9 |
| 487 | 2019/02/06 | 08:37:35 | 67.1 |
| 488 | 2019/02/06 | 08:37:36 | 66.8 |
| 489 | 2019/02/06 | 08:37:37 | 69.2 |
| 490 | 2019/02/06 | 08:37:38 | 67.7 |
| 491 | 2019/02/06 | 08:37:39 | 65.0 |
| 492 | 2019/02/06 | 08:37:40 | 61.4 |
| 493 | 2019/02/06 | 08:37:41 | 61.9 |
| 494 | 2019/02/06 | 08:37:42 | 60.8 |
| 495 | 2019/02/06 | 08:37:43 | 61.1 |
| 496 | 2019/02/06 | 08:37:44 | 63.8 |
| 497 | 2019/02/06 | 08:37:45 | 65.8 |
| 498 | 2019/02/06 | 08:37:46 | 66.3 |
| 499 | 2019/02/06 | 08:37:47 | 66.0 |
| 500 | 2019/02/06 | 08:37:48 | 65.9 |
| 501 | 2019/02/06 | 08:37:49 | 66.0 |
| 502 | 2019/02/06 | 08:37:50 | 67.6 |
| 503 | 2019/02/06 | 08:37:51 | 66.8 |
| 504 | 2019/02/06 | 08:37:52 | 67.4 |
| 505 | 2019/02/06 | 08:37:53 | 68.8 |
| 506 | 2019/02/06 | 08:37:54 | 70.6 |
| 507 | 2019/02/06 | 08:37:55 | 70.8 |
| 508 | 2019/02/06 | 08:37:56 | 69.1 |
| 509 | 2019/02/06 | 08:37:57 | 65.8 |
| 510 | 2019/02/06 | 08:37:58 | 66.0 |
| 511 | 2019/02/06 | 08:37:59 | 66.1 |
| 512 | 2019/02/06 | 08:38:00 | 65.8 |
| 513 | 2019/02/06 | 08:38:01 | 65.8 |
| 514 | 2019/02/06 | 08:38:02 | 67.5 |
| 515 | 2019/02/06 | 08:38:03 | 71.1 |
| 516 | 2019/02/06 | 08:38:04 | 71.0 |
| 517 | 2019/02/06 | 08:38:05 | 71.1 |
| 518 | 2019/02/06 | 08:38:06 | 68.2 |
| 519 | 2019/02/06 | 08:38:07 | 68.1 |
| 520 | 2019/02/06 | 08:38:08 | 70.9 |
| 521 | 2019/02/06 | 08:38:09 | 73.5 |
| 522 | 2019/02/06 | 08:38:10 | 70.9 |
| 523 | 2019/02/06 | 08:38:11 | 66.6 |
| 524 | 2019/02/06 | 08:38:12 | 67.0 |
| 525 | 2019/02/06 | 08:38:13 | 69.2 |
| 526 | 2019/02/06 | 08:38:14 | 70.6 |
| 527 | 2019/02/06 | 08:38:15 | 69.1 |
| 528 | 2019/02/06 | 08:38:16 | 65.2 |
| 529 | 2019/02/06 | 08:38:17 | 69.5 |
| 530 | 2019/02/06 | 08:38:18 | 71.8 |
| 531 | 2019/02/06 | 08:38:19 | 70.7 |
| 532 | 2019/02/06 | 08:38:20 | 69.9 |
| 533 | 2019/02/06 | 08:38:21 | 67.2 |
| 534 | 2019/02/06 | 08:38:22 | 69.5 |
| 535 | 2019/02/06 | 08:38:23 | 68.5 |
| 536 | 2019/02/06 | 08:38:24 | 67.1 |
| 537 | 2019/02/06 | 08:38:25 | 64.4 |
| 538 | 2019/02/06 | 08:38:26 | 63.1 |
| 539 | 2019/02/06 | 08:38:27 | 63.4 |
| 540 | 2019/02/06 | 08:38:28 | 61.9 |
| 541 | 2019/02/06 | 08:38:29 | 61.9 |
| 542 | 2019/02/06 | 08:38:30 | 57.2 |
| 543 | 2019/02/06 | 08:38:31 | 56.1 |
| 544 | 2019/02/06 | 08:38:32 | 58.6 |
| 545 | 2019/02/06 | 08:38:33 | 61.6 |
| 546 | 2019/02/06 | 08:38:34 | 64.8 |
| 547 | 2019/02/06 | 08:38:35 | 64.2 |
| 548 | 2019/02/06 | 08:38:36 | 62.3 |
| 549 | 2019/02/06 | 08:38:37 | 58.6 |
| 550 | 2019/02/06 | 08:38:38 | 58.9 |
| 551 | 2019/02/06 | 08:38:39 | 59.6 |
| 552 | 2019/02/06 | 08:38:40 | 62.2 |
| 553 | 2019/02/06 | 08:38:41 | 67.0 |
| 554 | 2019/02/06 | 08:38:42 | 67.0 |
| 555 | 2019/02/06 | 08:38:43 | 68.0 |
| 556 | 2019/02/06 | 08:38:44 | 66.5 |
| 557 | 2019/02/06 | 08:38:45 | 62.8 |
| 558 | 2019/02/06 | 08:38:46 | 60.2 |
| 559 | 2019/02/06 | 08:38:47 | 58.2 |
| 560 | 2019/02/06 | 08:38:48 | 56.9 |
| 561 | 2019/02/06 | 08:38:49 | 55.7 |
| 562 | 2019/02/06 | 08:38:50 | 57.8 |
| 563 | 2019/02/06 | 08:38:51 | 59.1 |
| 564 | 2019/02/06 | 08:38:52 | 59.9 |
| 565 | 2019/02/06 | 08:38:53 | 63.1 |
| 566 | 2019/02/06 | 08:38:54 | 64.6 |
| 567 | 2019/02/06 | 08:38:55 | 66.1 |
| 568 | 2019/02/06 | 08:38:56 | 66.7 |
| 569 | 2019/02/06 | 08:38:57 | 66.2 |
| 570 | 2019/02/06 | 08:38:58 | 67.1 |
| 571 | 2019/02/06 | 08:38:59 | 67.3 |
| 572 | 2019/02/06 | 08:39:00 | 66.5 |
| 573 | 2019/02/06 | 08:39:01 | 64.5 |
| 574 | 2019/02/06 | 08:39:02 | 60.8 |
| 575 | 2019/02/06 | 08:39:03 | 59.8 |
| 576 | 2019/02/06 | 08:39:04 | 57.9 |
| 577 | 2019/02/06 | 08:39:05 | 59.1 |
| 578 | 2019/02/06 | 08:39:06 | 59.1 |
| 579 | 2019/02/06 | 08:39:07 | 58.2 |
| 580 | 2019/02/06 | 08:39:08 | 59.3 |

| | | | |
|---|---|---|---|
| 581 | 2019/02/06 | 08:39:09 | 60.5 |
| 582 | 2019/02/06 | 08:39:10 | 62.1 |
| 583 | 2019/02/06 | 08:39:11 | 64.8 |
| 584 | 2019/02/06 | 08:39:12 | 64.5 |
| 585 | 2019/02/06 | 08:39:13 | 64.0 |
| 586 | 2019/02/06 | 08:39:14 | 64.7 |
| 587 | 2019/02/06 | 08:39:15 | 64.5 |
| 588 | 2019/02/06 | 08:39:16 | 67.1 |
| 589 | 2019/02/06 | 08:39:17 | 68.9 |
| 590 | 2019/02/06 | 08:39:18 | 69.7 |
| 591 | 2019/02/06 | 08:39:19 | 68.5 |
| 592 | 2019/02/06 | 08:39:20 | 68.1 |
| 593 | 2019/02/06 | 08:39:21 | 66.6 |
| 594 | 2019/02/06 | 08:39:22 | 66.0 |
| 595 | 2019/02/06 | 08:39:23 | 67.7 |
| 596 | 2019/02/06 | 08:39:24 | 66.8 |
| 597 | 2019/02/06 | 08:39:25 | 73.2 |
| 598 | 2019/02/06 | 08:39:26 | 75.4 |
| 599 | 2019/02/06 | 08:39:27 | 77.5 |
| 600 | 2019/02/06 | 08:39:28 | 73.7 |
| 601 | 2019/02/06 | 08:39:29 | 66.7 |
| 602 | 2019/02/06 | 08:39:30 | 62.8 |
| 603 | 2019/02/06 | 08:39:31 | 62.1 |
| 604 | 2019/02/06 | 08:39:32 | 66.2 |
| 605 | 2019/02/06 | 08:39:33 | 59.2 |
| 606 | 2019/02/06 | 08:39:34 | 65.3 |
| 607 | 2019/02/06 | 08:39:35 | 60.1 |
| 608 | 2019/02/06 | 08:39:36 | 59.2 |
| 609 | 2019/02/06 | 08:39:37 | 58.6 |
| 610 | 2019/02/06 | 08:39:38 | 63.3 |
| 611 | 2019/02/06 | 08:39:39 | 64.0 |
| 612 | 2019/02/06 | 08:39:40 | 62.3 |
| 613 | 2019/02/06 | 08:39:41 | 62.4 |
| 614 | 2019/02/06 | 08:39:42 | 64.5 |
| 615 | 2019/02/06 | 08:39:43 | 65.5 |
| 616 | 2019/02/06 | 08:39:44 | 64.9 |
| 617 | 2019/02/06 | 08:39:45 | 66.4 |
| 618 | 2019/02/06 | 08:39:46 | 65.2 |
| 619 | 2019/02/06 | 08:39:47 | 63.6 |
| 620 | 2019/02/06 | 08:39:48 | 60.4 |
| 621 | 2019/02/06 | 08:39:49 | 61.7 |
| 622 | 2019/02/06 | 08:39:50 | 64.4 |
| 623 | 2019/02/06 | 08:39:51 | 64.8 |
| 624 | 2019/02/06 | 08:39:52 | 62.2 |
| 625 | 2019/02/06 | 08:39:53 | 59.3 |
| 626 | 2019/02/06 | 08:39:54 | 59.3 |
| 627 | 2019/02/06 | 08:39:55 | 59.4 |
| 628 | 2019/02/06 | 08:39:56 | 60.8 |
| 629 | 2019/02/06 | 08:39:57 | 60.9 |
| 630 | 2019/02/06 | 08:39:58 | 61.5 |
| 631 | 2019/02/06 | 08:39:59 | 61.7 |
| 632 | 2019/02/06 | 08:40:00 | 62.1 |
| 633 | 2019/02/06 | 08:40:01 | 63.7 |
| 634 | 2019/02/06 | 08:40:02 | 66.2 |
| 635 | 2019/02/06 | 08:40:03 | 65.4 |
| 636 | 2019/02/06 | 08:40:04 | 61.8 |
| 637 | 2019/02/06 | 08:40:05 | 61.2 |
| 638 | 2019/02/06 | 08:40:06 | 60.9 |
| 639 | 2019/02/06 | 08:40:07 | 59.5 |
| 640 | 2019/02/06 | 08:40:08 | 60.6 |
| 641 | 2019/02/06 | 08:40:09 | 58.6 |
| 642 | 2019/02/06 | 08:40:10 | 58.8 |
| 643 | 2019/02/06 | 08:40:11 | 57.4 |
| 644 | 2019/02/06 | 08:40:12 | 57.6 |
| 645 | 2019/02/06 | 08:40:13 | 57.3 |
| 646 | 2019/02/06 | 08:40:14 | 55.1 |
| 647 | 2019/02/06 | 08:40:15 | 56.0 |
| 648 | 2019/02/06 | 08:40:16 | 55.7 |
| 649 | 2019/02/06 | 08:40:17 | 56.4 |
| 650 | 2019/02/06 | 08:40:18 | 56.1 |
| 651 | 2019/02/06 | 08:40:19 | 57.7 |
| 652 | 2019/02/06 | 08:40:20 | 60.1 |
| 653 | 2019/02/06 | 08:40:21 | 60.9 |
| 654 | 2019/02/06 | 08:40:22 | 63.8 |
| 655 | 2019/02/06 | 08:40:23 | 65.0 |
| 656 | 2019/02/06 | 08:40:24 | 63.6 |
| 657 | 2019/02/06 | 08:40:25 | 65.2 |
| 658 | 2019/02/06 | 08:40:26 | 68.6 |
| 659 | 2019/02/06 | 08:40:27 | 70.0 |
| 660 | 2019/02/06 | 08:40:28 | 69.5 |
| 661 | 2019/02/06 | 08:40:29 | 72.4 |
| 662 | 2019/02/06 | 08:40:30 | 72.7 |
| 663 | 2019/02/06 | 08:40:31 | 71.5 |
| 664 | 2019/02/06 | 08:40:32 | 71.9 |
| 665 | 2019/02/06 | 08:40:33 | 71.3 |
| 666 | 2019/02/06 | 08:40:34 | 71.9 |
| 667 | 2019/02/06 | 08:40:35 | 73.4 |
| 668 | 2019/02/06 | 08:40:36 | 70.3 |
| 669 | 2019/02/06 | 08:40:37 | 69.2 |
| 670 | 2019/02/06 | 08:40:38 | 69.2 |
| 671 | 2019/02/06 | 08:40:39 | 71.9 |
| 672 | 2019/02/06 | 08:40:40 | 72.9 |
| 673 | 2019/02/06 | 08:40:41 | 72.4 |
| 674 | 2019/02/06 | 08:40:42 | 73.1 |
| 675 | 2019/02/06 | 08:40:43 | 71.1 |
| 676 | 2019/02/06 | 08:40:44 | 70.8 |
| 677 | 2019/02/06 | 08:40:45 | 69.4 |
| 678 | 2019/02/06 | 08:40:46 | 69.9 |
| 679 | 2019/02/06 | 08:40:47 | 73.2 |

| | | | |
|---|---|---|---|
| 680 | 2019/02/06 | 08:40:48 | 72.0 |
| 681 | 2019/02/06 | 08:40:49 | 71.1 |
| 682 | 2019/02/06 | 08:40:50 | 73.0 |
| 683 | 2019/02/06 | 08:40:51 | 70.6 |
| 684 | 2019/02/06 | 08:40:52 | 70.3 |
| 685 | 2019/02/06 | 08:40:53 | 68.0 |
| 686 | 2019/02/06 | 08:40:54 | 67.7 |
| 687 | 2019/02/06 | 08:40:55 | 66.4 |
| 688 | 2019/02/06 | 08:40:56 | 65.3 |
| 689 | 2019/02/06 | 08:40:57 | 64.5 |
| 690 | 2019/02/06 | 08:40:58 | 62.3 |
| 691 | 2019/02/06 | 08:40:59 | 62.5 |
| 692 | 2019/02/06 | 08:41:00 | 60.3 |
| 693 | 2019/02/06 | 08:41:01 | 60.2 |
| 694 | 2019/02/06 | 08:41:02 | 60.0 |
| 695 | 2019/02/06 | 08:41:03 | 59.4 |
| 696 | 2019/02/06 | 08:41:04 | 58.4 |
| 697 | 2019/02/06 | 08:41:05 | 59.0 |
| 698 | 2019/02/06 | 08:41:06 | 58.2 |
| 699 | 2019/02/06 | 08:41:07 | 58.8 |
| 700 | 2019/02/06 | 08:41:08 | 59.4 |
| 701 | 2019/02/06 | 08:41:09 | 60.1 |
| 702 | 2019/02/06 | 08:41:10 | 64.1 |
| 703 | 2019/02/06 | 08:41:11 | 66.3 |
| 704 | 2019/02/06 | 08:41:12 | 66.6 |
| 705 | 2019/02/06 | 08:41:13 | 66.8 |
| 706 | 2019/02/06 | 08:41:14 | 66.7 |
| 707 | 2019/02/06 | 08:41:15 | 65.5 |
| 708 | 2019/02/06 | 08:41:16 | 65.0 |
| 709 | 2019/02/06 | 08:41:17 | 65.3 |
| 710 | 2019/02/06 | 08:41:18 | 65.3 |
| 711 | 2019/02/06 | 08:41:19 | 64.5 |
| 712 | 2019/02/06 | 08:41:20 | 62.8 |
| 713 | 2019/02/06 | 08:41:21 | 59.4 |
| 714 | 2019/02/06 | 08:41:22 | 57.6 |
| 715 | 2019/02/06 | 08:41:23 | 56.4 |
| 716 | 2019/02/06 | 08:41:24 | 57.8 |
| 717 | 2019/02/06 | 08:41:25 | 58.0 |
| 718 | 2019/02/06 | 08:41:26 | 59.1 |
| 719 | 2019/02/06 | 08:41:27 | 58.2 |
| 720 | 2019/02/06 | 08:41:28 | 59.6 |
| 721 | 2019/02/06 | 08:41:29 | 62.5 |
| 722 | 2019/02/06 | 08:41:30 | 65.7 |
| 723 | 2019/02/06 | 08:41:31 | 65.6 |
| 724 | 2019/02/06 | 08:41:32 | 64.5 |
| 725 | 2019/02/06 | 08:41:33 | 65.2 |
| 726 | 2019/02/06 | 08:41:34 | 64.6 |
| 727 | 2019/02/06 | 08:41:35 | 69.4 |
| 728 | 2019/02/06 | 08:41:36 | 69.6 |
| 729 | 2019/02/06 | 08:41:37 | 70.1 |
| 730 | 2019/02/06 | 08:41:38 | 68.9 |
| 731 | 2019/02/06 | 08:41:39 | 66.6 |
| 732 | 2019/02/06 | 08:41:40 | 68.2 |
| 733 | 2019/02/06 | 08:41:41 | 67.0 |
| 734 | 2019/02/06 | 08:41:42 | 68.5 |
| 735 | 2019/02/06 | 08:41:43 | 71.3 |
| 736 | 2019/02/06 | 08:41:44 | 71.6 |
| 737 | 2019/02/06 | 08:41:45 | 74.5 |
| 738 | 2019/02/06 | 08:41:46 | 73.9 |
| 739 | 2019/02/06 | 08:41:47 | 77.2 |
| 740 | 2019/02/06 | 08:41:48 | 78.7 |
| 741 | 2019/02/06 | 08:41:49 | 80.5 |
| 742 | 2019/02/06 | 08:41:50 | 78.5 |
| 743 | 2019/02/06 | 08:41:51 | 75.5 |
| 744 | 2019/02/06 | 08:41:52 | 76.0 |
| 745 | 2019/02/06 | 08:41:53 | 76.2 |
| 746 | 2019/02/06 | 08:41:54 | 76.2 |
| 747 | 2019/02/06 | 08:41:55 | 75.9 |
| 748 | 2019/02/06 | 08:41:56 | 78.5 |
| 749 | 2019/02/06 | 08:41:57 | 77.5 |
| 750 | 2019/02/06 | 08:41:58 | 77.9 |
| 751 | 2019/02/06 | 08:41:59 | 78.4 |
| 752 | 2019/02/06 | 08:42:00 | 76.2 |
| 753 | 2019/02/06 | 08:42:01 | 78.4 |
| 754 | 2019/02/06 | 08:42:02 | 74.9 |
| 755 | 2019/02/06 | 08:42:03 | 77.4 |
| 756 | 2019/02/06 | 08:42:04 | 76.7 |
| 757 | 2019/02/06 | 08:42:05 | 75.1 |
| 758 | 2019/02/06 | 08:42:06 | 74.6 |
| 759 | 2019/02/06 | 08:42:07 | 75.5 |
| 760 | 2019/02/06 | 08:42:08 | 74.5 |
| 761 | 2019/02/06 | 08:42:09 | 74.5 |
| 762 | 2019/02/06 | 08:42:10 | 73.3 |
| 763 | 2019/02/06 | 08:42:11 | 72.3 |
| 764 | 2019/02/06 | 08:42:12 | 74.8 |
| 765 | 2019/02/06 | 08:42:13 | 73.0 |
| 766 | 2019/02/06 | 08:42:14 | 73.5 |
| 767 | 2019/02/06 | 08:42:15 | 72.8 |
| 768 | 2019/02/06 | 08:42:16 | 72.9 |
| 769 | 2019/02/06 | 08:42:17 | 70.9 |
| 770 | 2019/02/06 | 08:42:18 | 68.9 |
| 771 | 2019/02/06 | 08:42:19 | 66.5 |
| 772 | 2019/02/06 | 08:42:20 | 70.7 |
| 773 | 2019/02/06 | 08:42:21 | 67.1 |
| 774 | 2019/02/06 | 08:42:22 | 64.5 |
| 775 | 2019/02/06 | 08:42:23 | 62.2 |
| 776 | 2019/02/06 | 08:42:24 | 62.8 |
| 777 | 2019/02/06 | 08:42:25 | 63.5 |
| 778 | 2019/02/06 | 08:42:26 | 62.7 |

| | | | |
|---|---|---|---|
| 779 | 2019/02/06 | 08:42:27 | 62.0 |
| 780 | 2019/02/06 | 08:42:28 | 61.4 |
| 781 | 2019/02/06 | 08:42:29 | 61.0 |
| 782 | 2019/02/06 | 08:42:30 | 63.9 |
| 783 | 2019/02/06 | 08:42:31 | 64.9 |
| 784 | 2019/02/06 | 08:42:32 | 66.9 |
| 785 | 2019/02/06 | 08:42:33 | 67.9 |
| 786 | 2019/02/06 | 08:42:34 | 67.4 |
| 787 | 2019/02/06 | 08:42:35 | 65.0 |
| 788 | 2019/02/06 | 08:42:36 | 65.4 |
| 789 | 2019/02/06 | 08:42:37 | 65.4 |
| 790 | 2019/02/06 | 08:42:38 | 64.2 |
| 791 | 2019/02/06 | 08:42:39 | 60.9 |
| 792 | 2019/02/06 | 08:42:40 | 59.2 |
| 793 | 2019/02/06 | 08:42:41 | 59.6 |
| 794 | 2019/02/06 | 08:42:42 | 59.0 |
| 795 | 2019/02/06 | 08:42:43 | 59.3 |
| 796 | 2019/02/06 | 08:42:44 | 61.1 |
| 797 | 2019/02/06 | 08:42:45 | 63.7 |
| 798 | 2019/02/06 | 08:42:46 | 66.0 |
| 799 | 2019/02/06 | 08:42:47 | 64.4 |
| 800 | 2019/02/06 | 08:42:48 | 63.6 |
| 801 | 2019/02/06 | 08:42:49 | 59.7 |
| 802 | 2019/02/06 | 08:42:50 | 59.6 |
| 803 | 2019/02/06 | 08:42:51 | 58.0 |
| 804 | 2019/02/06 | 08:42:52 | 59.0 |
| 805 | 2019/02/06 | 08:42:53 | 58.1 |
| 806 | 2019/02/06 | 08:42:54 | 59.3 |
| 807 | 2019/02/06 | 08:42:55 | 59.6 |
| 808 | 2019/02/06 | 08:42:56 | 62.3 |
| 809 | 2019/02/06 | 08:42:57 | 64.8 |
| 810 | 2019/02/06 | 08:42:58 | 70.0 |
| 811 | 2019/02/06 | 08:42:59 | 71.6 |
| 812 | 2019/02/06 | 08:43:00 | 71.9 |
| 813 | 2019/02/06 | 08:43:01 | 68.9 |
| 814 | 2019/02/06 | 08:43:02 | 69.6 |
| 815 | 2019/02/06 | 08:43:03 | 70.5 |
| 816 | 2019/02/06 | 08:43:04 | 71.5 |
| 817 | 2019/02/06 | 08:43:05 | 69.8 |
| 818 | 2019/02/06 | 08:43:06 | 67.3 |
| 819 | 2019/02/06 | 08:43:07 | 69.0 |
| 820 | 2019/02/06 | 08:43:08 | 70.5 |
| 821 | 2019/02/06 | 08:43:09 | 71.2 |
| 822 | 2019/02/06 | 08:43:10 | 69.9 |
| 823 | 2019/02/06 | 08:43:11 | 69.9 |
| 824 | 2019/02/06 | 08:43:12 | 64.6 |
| 825 | 2019/02/06 | 08:43:13 | 61.0 |
| 826 | 2019/02/06 | 08:43:14 | 60.0 |
| 827 | 2019/02/06 | 08:43:15 | 61.9 |
| 828 | 2019/02/06 | 08:43:16 | 65.2 |
| 829 | 2019/02/06 | 08:43:17 | 66.8 |
| 830 | 2019/02/06 | 08:43:18 | 63.7 |
| 831 | 2019/02/06 | 08:43:19 | 62.7 |
| 832 | 2019/02/06 | 08:43:20 | 66.7 |
| 833 | 2019/02/06 | 08:43:21 | 68.3 |
| 834 | 2019/02/06 | 08:43:22 | 68.4 |
| 835 | 2019/02/06 | 08:43:23 | 72.3 |
| 836 | 2019/02/06 | 08:43:24 | 67.4 |
| 837 | 2019/02/06 | 08:43:25 | 62.9 |
| 838 | 2019/02/06 | 08:43:26 | 60.8 |
| 839 | 2019/02/06 | 08:43:27 | 59.0 |
| 840 | 2019/02/06 | 08:43:28 | 59.1 |
| 841 | 2019/02/06 | 08:43:29 | 58.5 |
| 842 | 2019/02/06 | 08:43:30 | 57.7 |
| 843 | 2019/02/06 | 08:43:31 | 57.5 |
| 844 | 2019/02/06 | 08:43:32 | 58.9 |
| 845 | 2019/02/06 | 08:43:33 | 60.9 |
| 846 | 2019/02/06 | 08:43:34 | 66.5 |
| 847 | 2019/02/06 | 08:43:35 | 69.9 |
| 848 | 2019/02/06 | 08:43:36 | 69.2 |
| 849 | 2019/02/06 | 08:43:37 | 69.6 |
| 850 | 2019/02/06 | 08:43:38 | 68.9 |
| 851 | 2019/02/06 | 08:43:39 | 69.1 |
| 852 | 2019/02/06 | 08:43:40 | 69.5 |
| 853 | 2019/02/06 | 08:43:41 | 67.3 |
| 854 | 2019/02/06 | 08:43:42 | 63.5 |
| 855 | 2019/02/06 | 08:43:43 | 62.3 |
| 856 | 2019/02/06 | 08:43:44 | 60.8 |
| 857 | 2019/02/06 | 08:43:45 | 63.5 |
| 858 | 2019/02/06 | 08:43:46 | 67.1 |
| 859 | 2019/02/06 | 08:43:47 | 68.0 |
| 860 | 2019/02/06 | 08:43:48 | 65.8 |
| 861 | 2019/02/06 | 08:43:49 | 63.8 |
| 862 | 2019/02/06 | 08:43:50 | 64.3 |
| 863 | 2019/02/06 | 08:43:51 | 65.2 |
| 864 | 2019/02/06 | 08:43:52 | 67.0 |
| 865 | 2019/02/06 | 08:43:53 | 65.7 |
| 866 | 2019/02/06 | 08:43:54 | 64.5 |
| 867 | 2019/02/06 | 08:43:55 | 62.6 |
| 868 | 2019/02/06 | 08:43:56 | 60.2 |
| 869 | 2019/02/06 | 08:43:57 | 62.5 |
| 870 | 2019/02/06 | 08:43:58 | 63.9 |
| 871 | 2019/02/06 | 08:43:59 | 65.4 |
| 872 | 2019/02/06 | 08:44:00 | 65.9 |
| 873 | 2019/02/06 | 08:44:01 | 66.2 |
| 874 | 2019/02/06 | 08:44:02 | 64.5 |
| 875 | 2019/02/06 | 08:44:03 | 64.9 |
| 876 | 2019/02/06 | 08:44:04 | 64.1 |
| 877 | 2019/02/06 | 08:44:05 | 63.5 |

| | | | |
|---|---|---|---|
| 878 | 2019/02/06 | 08:44:06 | 62.7 |
| 879 | 2019/02/06 | 08:44:07 | 63.1 |
| 880 | 2019/02/06 | 08:44:08 | 62.6 |
| 881 | 2019/02/06 | 08:44:09 | 63.4 |
| 882 | 2019/02/06 | 08:44:10 | 64.2 |
| 883 | 2019/02/06 | 08:44:11 | 63.1 |
| 884 | 2019/02/06 | 08:44:12 | 64.2 |
| 885 | 2019/02/06 | 08:44:13 | 64.4 |
| 886 | 2019/02/06 | 08:44:14 | 67.2 |
| 887 | 2019/02/06 | 08:44:15 | 70.6 |
| 888 | 2019/02/06 | 08:44:16 | 70.3 |
| 889 | 2019/02/06 | 08:44:17 | 69.7 |
| 890 | 2019/02/06 | 08:44:18 | 70.3 |
| 891 | 2019/02/06 | 08:44:19 | 69.5 |
| 892 | 2019/02/06 | 08:44:20 | 70.1 |
| 893 | 2019/02/06 | 08:44:21 | 71.0 |
| 894 | 2019/02/06 | 08:44:22 | 71.1 |
| 895 | 2019/02/06 | 08:44:23 | 66.6 |
| 896 | 2019/02/06 | 08:44:24 | 62.6 |
| 897 | 2019/02/06 | 08:44:25 | 63.7 |
| 898 | 2019/02/06 | 08:44:26 | 65.6 |
| 899 | 2019/02/06 | 08:44:27 | 66.0 |
| 900 | 2019/02/06 | 08:44:28 | 64.6 |

Noise Measurement 2

- Freq Weight : A
- Time Weight : FAST
- Level Range : 40-100
- Max dB : 53.4 - 2019/02/06 08:07:08
- Level Range : 40-100
- SEL : 73.1
- Leq : 43.6
-

| No.s | Date Time | (dB) |
|---|---|---|
| 1 | 2019/02/06 08:00:52 | 49.0 |
| 2 | 2019/02/06 08:00:53 | 44.9 |
| 3 | 2019/02/06 08:00:54 | 43.1 |
| 4 | 2019/02/06 08:00:55 | 43.6 |
| 5 | 2019/02/06 08:00:56 | 44.0 |
| 6 | 2019/02/06 08:00:57 | 45.3 |
| 7 | 2019/02/06 08:00:58 | 44.4 |
| 8 | 2019/02/06 08:00:59 | 43.7 |
| 9 | 2019/02/06 08:01:00 | 44.6 |
| 10 | 2019/02/06 08:01:01 | 44.0 |
| 11 | 2019/02/06 08:01:02 | 43.8 |
| 12 | 2019/02/06 08:01:03 | 43.9 |
| 13 | 2019/02/06 08:01:04 | 44.4 |
| 14 | 2019/02/06 08:01:05 | 45.2 |
| 15 | 2019/02/06 08:01:06 | 44.3 |
| 16 | 2019/02/06 08:01:07 | 44.2 |
| 17 | 2019/02/06 08:01:08 | 44.2 |
| 18 | 2019/02/06 08:01:09 | 43.7 |
| 19 | 2019/02/06 08:01:10 | 44.1 |
| 20 | 2019/02/06 08:01:11 | 43.7 |
| 21 | 2019/02/06 08:01:12 | 44.1 |
| 22 | 2019/02/06 08:01:13 | 43.3 |
| 23 | 2019/02/06 08:01:14 | 43.2 |
| 24 | 2019/02/06 08:01:15 | 43.9 |
| 25 | 2019/02/06 08:01:16 | 43.3 |
| 26 | 2019/02/06 08:01:17 | 43.0 |
| 27 | 2019/02/06 08:01:18 | 43.2 |
| 28 | 2019/02/06 08:01:19 | 42.8 |
| 29 | 2019/02/06 08:01:20 | 42.9 |
| 30 | 2019/02/06 08:01:21 | 42.8 |
| 31 | 2019/02/06 08:01:22 | 43.2 |
| 32 | 2019/02/06 08:01:23 | 44.2 |
| 33 | 2019/02/06 08:01:24 | 43.4 |
| 34 | 2019/02/06 08:01:25 | 44.5 |
| 35 | 2019/02/06 08:01:26 | 44.5 |
| 36 | 2019/02/06 08:01:27 | 46.8 |
| 37 | 2019/02/06 08:01:28 | 42.8 |
| 38 | 2019/02/06 08:01:29 | 42.7 |
| 39 | 2019/02/06 08:01:30 | 44.5 |
| 40 | 2019/02/06 08:01:31 | 44.1 |
| 41 | 2019/02/06 08:01:32 | 44.6 |
| 42 | 2019/02/06 08:01:33 | 43.9 |
| 43 | 2019/02/06 08:01:34 | 43.6 |
| 44 | 2019/02/06 08:01:35 | 44.2 |
| 45 | 2019/02/06 08:01:36 | 43.8 |
| 46 | 2019/02/06 08:01:37 | 43.2 |
| 47 | 2019/02/06 08:01:38 | 42.8 |
| 48 | 2019/02/06 08:01:39 | 43.2 |
| 49 | 2019/02/06 08:01:40 | 43.4 |
| 50 | 2019/02/06 08:01:41 | 42.5 |
| 51 | 2019/02/06 08:01:42 | 43.2 |
| 52 | 2019/02/06 08:01:43 | 42.8 |
| 53 | 2019/02/06 08:01:44 | 43.1 |
| 54 | 2019/02/06 08:01:45 | 43.7 |
| 55 | 2019/02/06 08:01:46 | 43.4 |
| 56 | 2019/02/06 08:01:47 | 43.7 |
| 57 | 2019/02/06 08:01:48 | 43.3 |
| 58 | 2019/02/06 08:01:49 | 43.8 |
| 59 | 2019/02/06 08:01:50 | 43.3 |
| 60 | 2019/02/06 08:01:51 | 43.8 |
| 61 | 2019/02/06 08:01:52 | 43.5 |
| 62 | 2019/02/06 08:01:53 | 43.2 |
| 63 | 2019/02/06 08:01:54 | 43.6 |
| 64 | 2019/02/06 08:01:55 | 43.0 |
| 65 | 2019/02/06 08:01:56 | 43.9 |
| 66 | 2019/02/06 08:01:57 | 44.3 |
| 67 | 2019/02/06 08:01:58 | 43.6 |
| 68 | 2019/02/06 08:01:59 | 43.2 |
| 69 | 2019/02/06 08:02:00 | 42.4 |
| 70 | 2019/02/06 08:02:01 | 43.0 |
| 71 | 2019/02/06 08:02:02 | 42.8 |
| 72 | 2019/02/06 08:02:03 | 42.9 |
| 73 | 2019/02/06 08:02:04 | 42.4 |
| 74 | 2019/02/06 08:02:05 | 42.9 |
| 75 | 2019/02/06 08:02:06 | 41.7 |
| 76 | 2019/02/06 08:02:07 | 42.2 |
| 77 | 2019/02/06 08:02:08 | 42.7 |
| 78 | 2019/02/06 08:02:09 | 42.7 |
| 79 | 2019/02/06 08:02:10 | 43.8 |
| 80 | 2019/02/06 08:02:11 | 43.8 |
| 81 | 2019/02/06 08:02:12 | 43.6 |
| 82 | 2019/02/06 08:02:13 | 44.1 |
| 83 | 2019/02/06 08:02:14 | 44.5 |
| 84 | 2019/02/06 08:02:15 | 44.1 |
| 85 | 2019/02/06 08:02:16 | 43.5 |

| | | | |
|---|---|---|---|
| 86 | 2019/02/06 | 08:02:17 | 43.4 |
| 87 | 2019/02/06 | 08:02:18 | 44.3 |
| 88 | 2019/02/06 | 08:02:19 | 44.1 |
| 89 | 2019/02/06 | 08:02:20 | 43.6 |
| 90 | 2019/02/06 | 08:02:21 | 44.5 |
| 91 | 2019/02/06 | 08:02:22 | 43.6 |
| 92 | 2019/02/06 | 08:02:23 | 43.6 |
| 93 | 2019/02/06 | 08:02:24 | 44.1 |
| 94 | 2019/02/06 | 08:02:25 | 44.6 |
| 95 | 2019/02/06 | 08:02:26 | 45.0 |
| 96 | 2019/02/06 | 08:02:27 | 44.7 |
| 97 | 2019/02/06 | 08:02:28 | 44.1 |
| 98 | 2019/02/06 | 08:02:29 | 44.3 |
| 99 | 2019/02/06 | 08:02:30 | 44.2 |
| 100 | 2019/02/06 | 08:02:31 | 44.1 |
| 101 | 2019/02/06 | 08:02:32 | 43.1 |
| 102 | 2019/02/06 | 08:02:33 | 44.1 |
| 103 | 2019/02/06 | 08:02:34 | 43.6 |
| 104 | 2019/02/06 | 08:02:35 | 43.1 |
| 105 | 2019/02/06 | 08:02:36 | 43.1 |
| 106 | 2019/02/06 | 08:02:37 | 43.6 |
| 107 | 2019/02/06 | 08:02:38 | 43.8 |
| 108 | 2019/02/06 | 08:02:39 | 43.6 |
| 109 | 2019/02/06 | 08:02:40 | 43.8 |
| 110 | 2019/02/06 | 08:02:41 | 43.6 |
| 111 | 2019/02/06 | 08:02:42 | 43.7 |
| 112 | 2019/02/06 | 08:02:43 | 44.3 |
| 113 | 2019/02/06 | 08:02:44 | 43.4 |
| 114 | 2019/02/06 | 08:02:45 | 43.4 |
| 115 | 2019/02/06 | 08:02:46 | 44.0 |
| 116 | 2019/02/06 | 08:02:47 | 44.1 |
| 117 | 2019/02/06 | 08:02:48 | 44.7 |
| 118 | 2019/02/06 | 08:02:49 | 44.6 |
| 119 | 2019/02/06 | 08:02:50 | 43.5 |
| 120 | 2019/02/06 | 08:02:51 | 43.5 |
| 121 | 2019/02/06 | 08:02:52 | 44.5 |
| 122 | 2019/02/06 | 08:02:53 | 43.8 |
| 123 | 2019/02/06 | 08:02:54 | 43.9 |
| 124 | 2019/02/06 | 08:02:55 | 45.0 |
| 125 | 2019/02/06 | 08:02:56 | 44.4 |
| 126 | 2019/02/06 | 08:02:57 | 44.7 |
| 127 | 2019/02/06 | 08:02:58 | 43.9 |
| 128 | 2019/02/06 | 08:02:59 | 43.9 |
| 129 | 2019/02/06 | 08:03:00 | 43.5 |
| 130 | 2019/02/06 | 08:03:01 | 44.3 |
| 131 | 2019/02/06 | 08:03:02 | 45.0 |
| 132 | 2019/02/06 | 08:03:03 | 44.0 |
| 133 | 2019/02/06 | 08:03:04 | 44.9 |
| 134 | 2019/02/06 | 08:03:05 | 44.4 |
| 135 | 2019/02/06 | 08:03:06 | 44.3 |
| 136 | 2019/02/06 | 08:03:07 | 45.2 |
| 137 | 2019/02/06 | 08:03:08 | 44.4 |
| 138 | 2019/02/06 | 08:03:09 | 44.1 |
| 139 | 2019/02/06 | 08:03:10 | 43.9 |
| 140 | 2019/02/06 | 08:03:11 | 43.6 |
| 141 | 2019/02/06 | 08:03:12 | 43.2 |
| 142 | 2019/02/06 | 08:03:13 | 43.9 |
| 143 | 2019/02/06 | 08:03:14 | 44.1 |
| 144 | 2019/02/06 | 08:03:15 | 43.4 |
| 145 | 2019/02/06 | 08:03:16 | 43.3 |
| 146 | 2019/02/06 | 08:03:17 | 43.8 |
| 147 | 2019/02/06 | 08:03:18 | 43.1 |
| 148 | 2019/02/06 | 08:03:19 | 42.8 |
| 149 | 2019/02/06 | 08:03:20 | 43.1 |
| 150 | 2019/02/06 | 08:03:21 | 43.1 |
| 151 | 2019/02/06 | 08:03:22 | 43.2 |
| 152 | 2019/02/06 | 08:03:23 | 43.6 |
| 153 | 2019/02/06 | 08:03:24 | 43.6 |
| 154 | 2019/02/06 | 08:03:25 | 42.7 |
| 155 | 2019/02/06 | 08:03:26 | 43.5 |
| 156 | 2019/02/06 | 08:03:27 | 43.7 |
| 157 | 2019/02/06 | 08:03:28 | 42.8 |
| 158 | 2019/02/06 | 08:03:29 | 42.9 |
| 159 | 2019/02/06 | 08:03:30 | 42.9 |
| 160 | 2019/02/06 | 08:03:31 | 43.0 |
| 161 | 2019/02/06 | 08:03:32 | 42.8 |
| 162 | 2019/02/06 | 08:03:33 | 42.8 |
| 163 | 2019/02/06 | 08:03:34 | 43.2 |
| 164 | 2019/02/06 | 08:03:35 | 42.2 |
| 165 | 2019/02/06 | 08:03:36 | 43.0 |
| 166 | 2019/02/06 | 08:03:37 | 44.5 |
| 167 | 2019/02/06 | 08:03:38 | 42.8 |
| 168 | 2019/02/06 | 08:03:39 | 43.2 |
| 169 | 2019/02/06 | 08:03:40 | 42.4 |
| 170 | 2019/02/06 | 08:03:41 | 43.4 |
| 171 | 2019/02/06 | 08:03:42 | 45.2 |
| 172 | 2019/02/06 | 08:03:43 | 43.5 |
| 173 | 2019/02/06 | 08:03:44 | 43.4 |
| 174 | 2019/02/06 | 08:03:45 | 43.7 |
| 175 | 2019/02/06 | 08:03:46 | 43.7 |
| 176 | 2019/02/06 | 08:03:47 | 44.2 |
| 177 | 2019/02/06 | 08:03:48 | 43.3 |
| 178 | 2019/02/06 | 08:03:49 | 49.0 |
| 179 | 2019/02/06 | 08:03:50 | 43.8 |
| 180 | 2019/02/06 | 08:03:51 | 43.1 |
| 181 | 2019/02/06 | 08:03:52 | 48.5 |
| 182 | 2019/02/06 | 08:03:53 | 43.4 |
| 183 | 2019/02/06 | 08:03:54 | 43.7 |
| 184 | 2019/02/06 | 08:03:55 | 44.1 |

| | | | |
|---|---|---|---|
| 185 | 2019/02/06 | 08:03:56 | 44.1 |
| 186 | 2019/02/06 | 08:03:57 | 44.0 |
| 187 | 2019/02/06 | 08:03:58 | 44.6 |
| 188 | 2019/02/06 | 08:03:59 | 50.9 |
| 189 | 2019/02/06 | 08:04:00 | 44.5 |
| 190 | 2019/02/06 | 08:04:01 | 44.4 |
| 191 | 2019/02/06 | 08:04:02 | 43.3 |
| 192 | 2019/02/06 | 08:04:03 | 46.0 |
| 193 | 2019/02/06 | 08:04:04 | 43.2 |
| 194 | 2019/02/06 | 08:04:05 | 44.5 |
| 195 | 2019/02/06 | 08:04:06 | 43.2 |
| 196 | 2019/02/06 | 08:04:07 | 43.3 |
| 197 | 2019/02/06 | 08:04:08 | 43.0 |
| 198 | 2019/02/06 | 08:04:09 | 44.6 |
| 199 | 2019/02/06 | 08:04:10 | 44.0 |
| 200 | 2019/02/06 | 08:04:11 | 42.4 |
| 201 | 2019/02/06 | 08:04:12 | 45.8 |
| 202 | 2019/02/06 | 08:04:13 | 42.3 |
| 203 | 2019/02/06 | 08:04:14 | 43.9 |
| 204 | 2019/02/06 | 08:04:15 | 42.6 |
| 205 | 2019/02/06 | 08:04:16 | 43.9 |
| 206 | 2019/02/06 | 08:04:17 | 42.8 |
| 207 | 2019/02/06 | 08:04:18 | 44.1 |
| 208 | 2019/02/06 | 08:04:19 | 42.8 |
| 209 | 2019/02/06 | 08:04:20 | 42.6 |
| 210 | 2019/02/06 | 08:04:21 | 43.5 |
| 211 | 2019/02/06 | 08:04:22 | 43.0 |
| 212 | 2019/02/06 | 08:04:23 | 43.4 |
| 213 | 2019/02/06 | 08:04:24 | 43.7 |
| 214 | 2019/02/06 | 08:04:25 | 44.0 |
| 215 | 2019/02/06 | 08:04:26 | 43.8 |
| 216 | 2019/02/06 | 08:04:27 | 43.8 |
| 217 | 2019/02/06 | 08:04:28 | 43.3 |
| 218 | 2019/02/06 | 08:04:29 | 43.6 |
| 219 | 2019/02/06 | 08:04:30 | 43.5 |
| 220 | 2019/02/06 | 08:04:31 | 43.1 |
| 221 | 2019/02/06 | 08:04:32 | 43.2 |
| 222 | 2019/02/06 | 08:04:33 | 42.8 |
| 223 | 2019/02/06 | 08:04:34 | 42.7 |
| 224 | 2019/02/06 | 08:04:35 | 43.0 |
| 225 | 2019/02/06 | 08:04:36 | 42.4 |
| 226 | 2019/02/06 | 08:04:37 | 43.3 |
| 227 | 2019/02/06 | 08:04:38 | 43.2 |
| 228 | 2019/02/06 | 08:04:39 | 43.9 |
| 229 | 2019/02/06 | 08:04:40 | 43.1 |
| 230 | 2019/02/06 | 08:04:41 | 43.3 |
| 231 | 2019/02/06 | 08:04:42 | 43.2 |
| 232 | 2019/02/06 | 08:04:43 | 43.9 |
| 233 | 2019/02/06 | 08:04:44 | 43.7 |
| 234 | 2019/02/06 | 08:04:45 | 43.2 |
| 235 | 2019/02/06 | 08:04:46 | 43.1 |
| 236 | 2019/02/06 | 08:04:47 | 43.4 |
| 237 | 2019/02/06 | 08:04:48 | 43.4 |
| 238 | 2019/02/06 | 08:04:49 | 43.2 |
| 239 | 2019/02/06 | 08:04:50 | 43.5 |
| 240 | 2019/02/06 | 08:04:51 | 43.8 |
| 241 | 2019/02/06 | 08:04:52 | 43.4 |
| 242 | 2019/02/06 | 08:04:53 | 43.9 |
| 243 | 2019/02/06 | 08:04:54 | 43.4 |
| 244 | 2019/02/06 | 08:04:55 | 44.2 |
| 245 | 2019/02/06 | 08:04:56 | 43.7 |
| 246 | 2019/02/06 | 08:04:57 | 44.4 |
| 247 | 2019/02/06 | 08:04:58 | 46.6 |
| 248 | 2019/02/06 | 08:04:59 | 43.9 |
| 249 | 2019/02/06 | 08:05:00 | 45.0 |
| 250 | 2019/02/06 | 08:05:01 | 44.4 |
| 251 | 2019/02/06 | 08:05:02 | 44.8 |
| 252 | 2019/02/06 | 08:05:03 | 44.2 |
| 253 | 2019/02/06 | 08:05:04 | 43.9 |
| 254 | 2019/02/06 | 08:05:05 | 44.0 |
| 255 | 2019/02/06 | 08:05:06 | 44.1 |
| 256 | 2019/02/06 | 08:05:07 | 43.8 |
| 257 | 2019/02/06 | 08:05:08 | 45.3 |
| 258 | 2019/02/06 | 08:05:09 | 43.8 |
| 259 | 2019/02/06 | 08:05:10 | 43.8 |
| 260 | 2019/02/06 | 08:05:11 | 45.2 |
| 261 | 2019/02/06 | 08:05:12 | 43.3 |
| 262 | 2019/02/06 | 08:05:13 | 43.3 |
| 263 | 2019/02/06 | 08:05:14 | 43.7 |
| 264 | 2019/02/06 | 08:05:15 | 43.5 |
| 265 | 2019/02/06 | 08:05:16 | 44.1 |
| 266 | 2019/02/06 | 08:05:17 | 44.6 |
| 267 | 2019/02/06 | 08:05:18 | 43.7 |
| 268 | 2019/02/06 | 08:05:19 | 43.7 |
| 269 | 2019/02/06 | 08:05:20 | 43.1 |
| 270 | 2019/02/06 | 08:05:21 | 42.5 |
| 271 | 2019/02/06 | 08:05:22 | 42.6 |
| 272 | 2019/02/06 | 08:05:23 | 41.8 |
| 273 | 2019/02/06 | 08:05:24 | 42.1 |
| 274 | 2019/02/06 | 08:05:25 | 42.3 |
| 275 | 2019/02/06 | 08:05:26 | 41.9 |
| 276 | 2019/02/06 | 08:05:27 | 46.1 |
| 277 | 2019/02/06 | 08:05:28 | 42.1 |
| 278 | 2019/02/06 | 08:05:29 | 42.4 |
| 279 | 2019/02/06 | 08:05:30 | 43.0 |
| 280 | 2019/02/06 | 08:05:31 | 42.6 |
| 281 | 2019/02/06 | 08:05:32 | 43.4 |
| 282 | 2019/02/06 | 08:05:33 | 42.9 |
| 283 | 2019/02/06 | 08:05:34 | 42.9 |

| | | | |
|---|---|---|---|
| 284 | 2019/02/06 | 08:05:35 | 42.8 |
| 285 | 2019/02/06 | 08:05:36 | 44.5 |
| 286 | 2019/02/06 | 08:05:37 | 43.8 |
| 287 | 2019/02/06 | 08:05:38 | 44.3 |
| 288 | 2019/02/06 | 08:05:39 | 44.3 |
| 289 | 2019/02/06 | 08:05:40 | 45.2 |
| 290 | 2019/02/06 | 08:05:41 | 44.2 |
| 291 | 2019/02/06 | 08:05:42 | 44.6 |
| 292 | 2019/02/06 | 08:05:43 | 43.2 |
| 293 | 2019/02/06 | 08:05:44 | 44.0 |
| 294 | 2019/02/06 | 08:05:45 | 43.2 |
| 295 | 2019/02/06 | 08:05:46 | 44.4 |
| 296 | 2019/02/06 | 08:05:47 | 44.4 |
| 297 | 2019/02/06 | 08:05:48 | 47.0 |
| 298 | 2019/02/06 | 08:05:49 | 43.9 |
| 299 | 2019/02/06 | 08:05:50 | 43.6 |
| 300 | 2019/02/06 | 08:05:51 | 43.5 |
| 301 | 2019/02/06 | 08:05:52 | 43.3 |
| 302 | 2019/02/06 | 08:05:53 | 46.9 |
| 303 | 2019/02/06 | 08:05:54 | 45.7 |
| 304 | 2019/02/06 | 08:05:55 | 43.3 |
| 305 | 2019/02/06 | 08:05:56 | 43.2 |
| 306 | 2019/02/06 | 08:05:57 | 43.3 |
| 307 | 2019/02/06 | 08:05:58 | 43.6 |
| 308 | 2019/02/06 | 08:05:59 | 43.4 |
| 309 | 2019/02/06 | 08:06:00 | 43.5 |
| 310 | 2019/02/06 | 08:06:01 | 43.2 |
| 311 | 2019/02/06 | 08:06:02 | 44.2 |
| 312 | 2019/02/06 | 08:06:03 | 43.8 |
| 313 | 2019/02/06 | 08:06:04 | 44.1 |
| 314 | 2019/02/06 | 08:06:05 | 43.6 |
| 315 | 2019/02/06 | 08:06:06 | 46.5 |
| 316 | 2019/02/06 | 08:06:07 | 47.2 |
| 317 | 2019/02/06 | 08:06:08 | 42.3 |
| 318 | 2019/02/06 | 08:06:09 | 45.3 |
| 319 | 2019/02/06 | 08:06:10 | 42.6 |
| 320 | 2019/02/06 | 08:06:11 | 42.9 |
| 321 | 2019/02/06 | 08:06:12 | 42.5 |
| 322 | 2019/02/06 | 08:06:13 | 42.0 |
| 323 | 2019/02/06 | 08:06:14 | 42.9 |
| 324 | 2019/02/06 | 08:06:15 | 42.1 |
| 325 | 2019/02/06 | 08:06:16 | 42.1 |
| 326 | 2019/02/06 | 08:06:17 | 43.0 |
| 327 | 2019/02/06 | 08:06:18 | 41.6 |
| 328 | 2019/02/06 | 08:06:19 | 41.9 |
| 329 | 2019/02/06 | 08:06:20 | 42.8 |
| 330 | 2019/02/06 | 08:06:21 | 42.8 |
| 331 | 2019/02/06 | 08:06:22 | 43.2 |
| 332 | 2019/02/06 | 08:06:23 | 42.1 |
| 333 | 2019/02/06 | 08:06:24 | 42.8 |
| 334 | 2019/02/06 | 08:06:25 | 42.7 |
| 335 | 2019/02/06 | 08:06:26 | 42.5 |
| 336 | 2019/02/06 | 08:06:27 | 42.8 |
| 337 | 2019/02/06 | 08:06:28 | 41.9 |
| 338 | 2019/02/06 | 08:06:29 | 43.2 |
| 339 | 2019/02/06 | 08:06:30 | 42.6 |
| 340 | 2019/02/06 | 08:06:31 | 41.9 |
| 341 | 2019/02/06 | 08:06:32 | 42.5 |
| 342 | 2019/02/06 | 08:06:33 | 42.9 |
| 343 | 2019/02/06 | 08:06:34 | 43.8 |
| 344 | 2019/02/06 | 08:06:35 | 44.2 |
| 345 | 2019/02/06 | 08:06:36 | 43.7 |
| 346 | 2019/02/06 | 08:06:37 | 43.4 |
| 347 | 2019/02/06 | 08:06:38 | 44.6 |
| 348 | 2019/02/06 | 08:06:39 | 44.2 |
| 349 | 2019/02/06 | 08:06:40 | 43.7 |
| 350 | 2019/02/06 | 08:06:41 | 43.7 |
| 351 | 2019/02/06 | 08:06:42 | 43.9 |
| 352 | 2019/02/06 | 08:06:43 | 43.4 |
| 353 | 2019/02/06 | 08:06:44 | 44.0 |
| 354 | 2019/02/06 | 08:06:45 | 42.7 |
| 355 | 2019/02/06 | 08:06:46 | 42.9 |
| 356 | 2019/02/06 | 08:06:47 | 42.3 |
| 357 | 2019/02/06 | 08:06:48 | 41.5 |
| 358 | 2019/02/06 | 08:06:49 | 47.1 |
| 359 | 2019/02/06 | 08:06:50 | 41.9 |
| 360 | 2019/02/06 | 08:06:51 | 42.8 |
| 361 | 2019/02/06 | 08:06:52 | 43.4 |
| 362 | 2019/02/06 | 08:06:53 | 41.5 |
| 363 | 2019/02/06 | 08:06:54 | 41.9 |
| 364 | 2019/02/06 | 08:06:55 | 42.0 |
| 365 | 2019/02/06 | 08:06:56 | 42.4 |
| 366 | 2019/02/06 | 08:06:57 | 43.7 |
| 367 | 2019/02/06 | 08:06:58 | 47.1 |
| 368 | 2019/02/06 | 08:06:59 | 42.0 |
| 369 | 2019/02/06 | 08:07:00 | 42.3 |
| 370 | 2019/02/06 | 08:07:01 | 43.2 |
| 371 | 2019/02/06 | 08:07:02 | 46.2 |
| 372 | 2019/02/06 | 08:07:03 | 43.5 |
| 373 | 2019/02/06 | 08:07:04 | 44.2 |
| 374 | 2019/02/06 | 08:07:05 | 45.3 |
| 375 | 2019/02/06 | 08:07:06 | 46.2 |
| 376 | 2019/02/06 | 08:07:07 | 45.5 |
| 377 | 2019/02/06 | 08:07:08 | 48.4 |
| 378 | 2019/02/06 | 08:07:09 | 45.3 |
| 379 | 2019/02/06 | 08:07:10 | 43.4 |
| 380 | 2019/02/06 | 08:07:11 | 44.0 |
| 381 | 2019/02/06 | 08:07:12 | 45.2 |
| 382 | 2019/02/06 | 08:07:13 | 43.8 |

| | | | |
|---|---|---|---|
| 383 | 2019/02/06 | 08:07:14 | 43.8 |
| 384 | 2019/02/06 | 08:07:15 | 45.8 |
| 385 | 2019/02/06 | 08:07:16 | 46.9 |
| 386 | 2019/02/06 | 08:07:17 | 46.3 |
| 387 | 2019/02/06 | 08:07:18 | 46.7 |
| 388 | 2019/02/06 | 08:07:19 | 48.2 |
| 389 | 2019/02/06 | 08:07:20 | 48.0 |
| 390 | 2019/02/06 | 08:07:21 | 46.5 |
| 391 | 2019/02/06 | 08:07:22 | 46.2 |
| 392 | 2019/02/06 | 08:07:23 | 46.5 |
| 393 | 2019/02/06 | 08:07:24 | 45.3 |
| 394 | 2019/02/06 | 08:07:25 | 45.3 |
| 395 | 2019/02/06 | 08:07:26 | 44.7 |
| 396 | 2019/02/06 | 08:07:27 | 43.6 |
| 397 | 2019/02/06 | 08:07:28 | 42.7 |
| 398 | 2019/02/06 | 08:07:29 | 43.3 |
| 399 | 2019/02/06 | 08:07:30 | 44.1 |
| 400 | 2019/02/06 | 08:07:31 | 44.2 |
| 401 | 2019/02/06 | 08:07:32 | 44.0 |
| 402 | 2019/02/06 | 08:07:33 | 43.2 |
| 403 | 2019/02/06 | 08:07:34 | 43.8 |
| 404 | 2019/02/06 | 08:07:35 | 44.6 |
| 405 | 2019/02/06 | 08:07:36 | 44.1 |
| 406 | 2019/02/06 | 08:07:37 | 44.6 |
| 407 | 2019/02/06 | 08:07:38 | 44.1 |
| 408 | 2019/02/06 | 08:07:39 | 44.8 |
| 409 | 2019/02/06 | 08:07:40 | 43.2 |
| 410 | 2019/02/06 | 08:07:41 | 43.9 |
| 411 | 2019/02/06 | 08:07:42 | 42.6 |
| 412 | 2019/02/06 | 08:07:43 | 44.3 |
| 413 | 2019/02/06 | 08:07:44 | 44.0 |
| 414 | 2019/02/06 | 08:07:45 | 44.1 |
| 415 | 2019/02/06 | 08:07:46 | 43.6 |
| 416 | 2019/02/06 | 08:07:47 | 43.1 |
| 417 | 2019/02/06 | 08:07:48 | 45.3 |
| 418 | 2019/02/06 | 08:07:49 | 44.1 |
| 419 | 2019/02/06 | 08:07:50 | 44.6 |
| 420 | 2019/02/06 | 08:07:51 | 43.7 |
| 421 | 2019/02/06 | 08:07:52 | 45.2 |
| 422 | 2019/02/06 | 08:07:53 | 43.9 |
| 423 | 2019/02/06 | 08:07:54 | 44.2 |
| 424 | 2019/02/06 | 08:07:55 | 44.1 |
| 425 | 2019/02/06 | 08:07:56 | 44.2 |
| 426 | 2019/02/06 | 08:07:57 | 45.4 |
| 427 | 2019/02/06 | 08:07:58 | 44.9 |
| 428 | 2019/02/06 | 08:07:59 | 45.3 |
| 429 | 2019/02/06 | 08:08:00 | 44.6 |
| 430 | 2019/02/06 | 08:08:01 | 45.3 |
| 431 | 2019/02/06 | 08:08:02 | 44.7 |
| 432 | 2019/02/06 | 08:08:03 | 44.6 |
| 433 | 2019/02/06 | 08:08:04 | 43.9 |
| 434 | 2019/02/06 | 08:08:05 | 44.0 |
| 435 | 2019/02/06 | 08:08:06 | 45.5 |
| 436 | 2019/02/06 | 08:08:07 | 46.2 |
| 437 | 2019/02/06 | 08:08:08 | 46.0 |
| 438 | 2019/02/06 | 08:08:09 | 44.9 |
| 439 | 2019/02/06 | 08:08:10 | 44.3 |
| 440 | 2019/02/06 | 08:08:11 | 44.7 |
| 441 | 2019/02/06 | 08:08:12 | 44.3 |
| 442 | 2019/02/06 | 08:08:13 | 44.4 |
| 443 | 2019/02/06 | 08:08:14 | 44.4 |
| 444 | 2019/02/06 | 08:08:15 | 43.7 |
| 445 | 2019/02/06 | 08:08:16 | 44.4 |
| 446 | 2019/02/06 | 08:08:17 | 43.4 |
| 447 | 2019/02/06 | 08:08:18 | 44.0 |
| 448 | 2019/02/06 | 08:08:19 | 44.3 |
| 449 | 2019/02/06 | 08:08:20 | 43.4 |
| 450 | 2019/02/06 | 08:08:21 | 45.6 |
| 451 | 2019/02/06 | 08:08:22 | 43.8 |
| 452 | 2019/02/06 | 08:08:23 | 45.1 |
| 453 | 2019/02/06 | 08:08:24 | 42.7 |
| 454 | 2019/02/06 | 08:08:25 | 43.4 |
| 455 | 2019/02/06 | 08:08:26 | 43.2 |
| 456 | 2019/02/06 | 08:08:27 | 43.1 |
| 457 | 2019/02/06 | 08:08:28 | 43.5 |
| 458 | 2019/02/06 | 08:08:29 | 42.6 |
| 459 | 2019/02/06 | 08:08:30 | 43.0 |
| 460 | 2019/02/06 | 08:08:31 | 43.4 |
| 461 | 2019/02/06 | 08:08:32 | 42.8 |
| 462 | 2019/02/06 | 08:08:33 | 44.4 |
| 463 | 2019/02/06 | 08:08:34 | 42.8 |
| 464 | 2019/02/06 | 08:08:35 | 43.3 |
| 465 | 2019/02/06 | 08:08:36 | 42.4 |
| 466 | 2019/02/06 | 08:08:37 | 43.6 |
| 467 | 2019/02/06 | 08:08:38 | 48.0 |
| 468 | 2019/02/06 | 08:08:39 | 43.1 |
| 469 | 2019/02/06 | 08:08:40 | 42.9 |
| 470 | 2019/02/06 | 08:08:41 | 45.0 |
| 471 | 2019/02/06 | 08:08:42 | 42.7 |
| 472 | 2019/02/06 | 08:08:43 | 42.7 |
| 473 | 2019/02/06 | 08:08:44 | 42.7 |
| 474 | 2019/02/06 | 08:08:45 | 47.2 |
| 475 | 2019/02/06 | 08:08:46 | 47.3 |
| 476 | 2019/02/06 | 08:08:47 | 43.2 |
| 477 | 2019/02/06 | 08:08:48 | 42.3 |
| 478 | 2019/02/06 | 08:08:49 | 44.9 |
| 479 | 2019/02/06 | 08:08:50 | 42.8 |
| 480 | 2019/02/06 | 08:08:51 | 43.4 |
| 481 | 2019/02/06 | 08:08:52 | 44.1 |

| | | | |
|---|---|---|---|
| 482 | 2019/02/06 | 08:08:53 | 44.5 |
| 483 | 2019/02/06 | 08:08:54 | 42.3 |
| 484 | 2019/02/06 | 08:08:55 | 42.7 |
| 485 | 2019/02/06 | 08:08:56 | 42.5 |
| 486 | 2019/02/06 | 08:08:57 | 42.7 |
| 487 | 2019/02/06 | 08:08:58 | 42.1 |
| 488 | 2019/02/06 | 08:08:59 | 45.5 |
| 489 | 2019/02/06 | 08:09:00 | 42.7 |
| 490 | 2019/02/06 | 08:09:01 | 46.7 |
| 491 | 2019/02/06 | 08:09:02 | 47.8 |
| 492 | 2019/02/06 | 08:09:03 | 43.8 |
| 493 | 2019/02/06 | 08:09:04 | 43.2 |
| 494 | 2019/02/06 | 08:09:05 | 43.9 |
| 495 | 2019/02/06 | 08:09:06 | 45.3 |
| 496 | 2019/02/06 | 08:09:07 | 42.5 |
| 497 | 2019/02/06 | 08:09:08 | 43.9 |
| 498 | 2019/02/06 | 08:09:09 | 42.3 |
| 499 | 2019/02/06 | 08:09:10 | 42.9 |
| 500 | 2019/02/06 | 08:09:11 | 42.9 |
| 501 | 2019/02/06 | 08:09:12 | 45.1 |
| 502 | 2019/02/06 | 08:09:13 | 45.5 |
| 503 | 2019/02/06 | 08:09:14 | 45.2 |
| 504 | 2019/02/06 | 08:09:15 | 43.9 |
| 505 | 2019/02/06 | 08:09:16 | 43.1 |
| 506 | 2019/02/06 | 08:09:17 | 50.7 |
| 507 | 2019/02/06 | 08:09:18 | 42.2 |
| 508 | 2019/02/06 | 08:09:19 | 42.5 |
| 509 | 2019/02/06 | 08:09:20 | 46.8 |
| 510 | 2019/02/06 | 08:09:21 | 41.7 |
| 511 | 2019/02/06 | 08:09:22 | 44.1 |
| 512 | 2019/02/06 | 08:09:23 | 42.7 |
| 513 | 2019/02/06 | 08:09:24 | 42.0 |
| 514 | 2019/02/06 | 08:09:25 | 42.4 |
| 515 | 2019/02/06 | 08:09:26 | 42.3 |
| 516 | 2019/02/06 | 08:09:27 | 43.3 |
| 517 | 2019/02/06 | 08:09:28 | 43.4 |
| 518 | 2019/02/06 | 08:09:29 | 43.7 |
| 519 | 2019/02/06 | 08:09:30 | 45.0 |
| 520 | 2019/02/06 | 08:09:31 | 43.5 |
| 521 | 2019/02/06 | 08:09:32 | 43.9 |
| 522 | 2019/02/06 | 08:09:33 | 43.8 |
| 523 | 2019/02/06 | 08:09:34 | 43.9 |
| 524 | 2019/02/06 | 08:09:35 | 49.0 |
| 525 | 2019/02/06 | 08:09:36 | 44.4 |
| 526 | 2019/02/06 | 08:09:37 | 44.7 |
| 527 | 2019/02/06 | 08:09:38 | 43.2 |
| 528 | 2019/02/06 | 08:09:39 | 45.6 |
| 529 | 2019/02/06 | 08:09:40 | 47.4 |
| 530 | 2019/02/06 | 08:09:41 | 45.3 |
| 531 | 2019/02/06 | 08:09:42 | 45.3 |
| 532 | 2019/02/06 | 08:09:43 | 48.4 |
| 533 | 2019/02/06 | 08:09:44 | 45.4 |
| 534 | 2019/02/06 | 08:09:45 | 43.7 |
| 535 | 2019/02/06 | 08:09:46 | 43.1 |
| 536 | 2019/02/06 | 08:09:47 | 43.0 |
| 537 | 2019/02/06 | 08:09:48 | 43.2 |
| 538 | 2019/02/06 | 08:09:49 | 43.5 |
| 539 | 2019/02/06 | 08:09:50 | 44.2 |
| 540 | 2019/02/06 | 08:09:51 | 44.2 |
| 541 | 2019/02/06 | 08:09:52 | 43.5 |
| 542 | 2019/02/06 | 08:09:53 | 43.2 |
| 543 | 2019/02/06 | 08:09:54 | 43.2 |
| 544 | 2019/02/06 | 08:09:55 | 43.1 |
| 545 | 2019/02/06 | 08:09:56 | 43.3 |
| 546 | 2019/02/06 | 08:09:57 | 42.2 |
| 547 | 2019/02/06 | 08:09:58 | 42.7 |
| 548 | 2019/02/06 | 08:09:59 | 42.6 |
| 549 | 2019/02/06 | 08:10:00 | 42.1 |
| 550 | 2019/02/06 | 08:10:01 | 42.8 |
| 551 | 2019/02/06 | 08:10:02 | 43.5 |
| 552 | 2019/02/06 | 08:10:03 | 44.4 |
| 553 | 2019/02/06 | 08:10:04 | 43.0 |
| 554 | 2019/02/06 | 08:10:05 | 42.3 |
| 555 | 2019/02/06 | 08:10:06 | 42.4 |
| 556 | 2019/02/06 | 08:10:07 | 42.3 |
| 557 | 2019/02/06 | 08:10:08 | 42.4 |
| 558 | 2019/02/06 | 08:10:09 | 42.7 |
| 559 | 2019/02/06 | 08:10:10 | 41.2 |
| 560 | 2019/02/06 | 08:10:11 | 41.7 |
| 561 | 2019/02/06 | 08:10:12 | 41.9 |
| 562 | 2019/02/06 | 08:10:13 | 41.1 |
| 563 | 2019/02/06 | 08:10:14 | 41.7 |
| 564 | 2019/02/06 | 08:10:15 | 41.4 |
| 565 | 2019/02/06 | 08:10:16 | 44.8 |
| 566 | 2019/02/06 | 08:10:17 | 41.7 |
| 567 | 2019/02/06 | 08:10:18 | 41.3 |
| 568 | 2019/02/06 | 08:10:19 | 41.0 |
| 569 | 2019/02/06 | 08:10:20 | 41.3 |
| 570 | 2019/02/06 | 08:10:21 | 41.2 |
| 571 | 2019/02/06 | 08:10:22 | 41.3 |
| 572 | 2019/02/06 | 08:10:23 | 41.0 |
| 573 | 2019/02/06 | 08:10:24 | 40.8 |
| 574 | 2019/02/06 | 08:10:25 | 40.6 |
| 575 | 2019/02/06 | 08:10:26 | 40.5 |
| 576 | 2019/02/06 | 08:10:27 | 40.2 |
| 577 | 2019/02/06 | 08:10:28 | 40.9 |
| 578 | 2019/02/06 | 08:10:29 | 40.5 |
| 579 | 2019/02/06 | 08:10:30 | 42.4 |
| 580 | 2019/02/06 | 08:10:31 | 41.1 |

| | | | |
|---|---|---|---|
| 581 | 2019/02/06 | 08:10:32 | 40.6 |
| 582 | 2019/02/06 | 08:10:33 | 40.7 |
| 583 | 2019/02/06 | 08:10:34 | 41.0 |
| 584 | 2019/02/06 | 08:10:35 | 40.9 |
| 585 | 2019/02/06 | 08:10:36 | 41.0 |
| 586 | 2019/02/06 | 08:10:37 | 42.4 |
| 587 | 2019/02/06 | 08:10:38 | 41.4 |
| 588 | 2019/02/06 | 08:10:39 | 41.1 |
| 589 | 2019/02/06 | 08:10:40 | 40.8 |
| 590 | 2019/02/06 | 08:10:41 | 40.2 |
| 591 | 2019/02/06 | 08:10:42 | 41.4 |
| 592 | 2019/02/06 | 08:10:43 | 40.9 |
| 593 | 2019/02/06 | 08:10:44 | 41.9 |
| 594 | 2019/02/06 | 08:10:45 | 41.9 |
| 595 | 2019/02/06 | 08:10:46 | 41.9 |
| 596 | 2019/02/06 | 08:10:47 | 42.2 |
| 597 | 2019/02/06 | 08:10:48 | 42.2 |
| 598 | 2019/02/06 | 08:10:49 | 42.5 |
| 599 | 2019/02/06 | 08:10:50 | 42.6 |
| 600 | 2019/02/06 | 08:10:51 | 43.4 |
| 601 | 2019/02/06 | 08:10:52 | 42.9 |
| 602 | 2019/02/06 | 08:10:53 | 44.1 |
| 603 | 2019/02/06 | 08:10:54 | 44.1 |
| 604 | 2019/02/06 | 08:10:55 | 43.7 |
| 605 | 2019/02/06 | 08:10:56 | 42.7 |
| 606 | 2019/02/06 | 08:10:57 | 43.0 |
| 607 | 2019/02/06 | 08:10:58 | 42.5 |
| 608 | 2019/02/06 | 08:10:59 | 42.2 |
| 609 | 2019/02/06 | 08:11:00 | 42.7 |
| 610 | 2019/02/06 | 08:11:01 | 42.1 |
| 611 | 2019/02/06 | 08:11:02 | 42.1 |
| 612 | 2019/02/06 | 08:11:03 | 42.2 |
| 613 | 2019/02/06 | 08:11:04 | 42.2 |
| 614 | 2019/02/06 | 08:11:05 | 41.1 |
| 615 | 2019/02/06 | 08:11:06 | 42.4 |
| 616 | 2019/02/06 | 08:11:07 | 41.8 |
| 617 | 2019/02/06 | 08:11:08 | 41.5 |
| 618 | 2019/02/06 | 08:11:09 | 41.0 |
| 619 | 2019/02/06 | 08:11:10 | 42.3 |
| 620 | 2019/02/06 | 08:11:11 | 42.1 |
| 621 | 2019/02/06 | 08:11:12 | 41.6 |
| 622 | 2019/02/06 | 08:11:13 | 41.9 |
| 623 | 2019/02/06 | 08:11:14 | 41.6 |
| 624 | 2019/02/06 | 08:11:15 | 41.9 |
| 625 | 2019/02/06 | 08:11:16 | 40.9 |
| 626 | 2019/02/06 | 08:11:17 | 42.5 |
| 627 | 2019/02/06 | 08:11:18 | 41.9 |
| 628 | 2019/02/06 | 08:11:19 | 42.5 |
| 629 | 2019/02/06 | 08:11:20 | 42.1 |
| 630 | 2019/02/06 | 08:11:21 | 40.7 |
| 631 | 2019/02/06 | 08:11:22 | 40.9 |
| 632 | 2019/02/06 | 08:11:23 | 41.2 |
| 633 | 2019/02/06 | 08:11:24 | 40.8 |
| 634 | 2019/02/06 | 08:11:25 | 41.7 |
| 635 | 2019/02/06 | 08:11:26 | 40.4 |
| 636 | 2019/02/06 | 08:11:27 | 41.2 |
| 637 | 2019/02/06 | 08:11:28 | 41.7 |
| 638 | 2019/02/06 | 08:11:29 | 41.8 |
| 639 | 2019/02/06 | 08:11:30 | 41.5 |
| 640 | 2019/02/06 | 08:11:31 | 41.0 |
| 641 | 2019/02/06 | 08:11:32 | 42.3 |
| 642 | 2019/02/06 | 08:11:33 | 42.3 |
| 643 | 2019/02/06 | 08:11:34 | 41.1 |
| 644 | 2019/02/06 | 08:11:35 | 41.6 |
| 645 | 2019/02/06 | 08:11:36 | 41.9 |
| 646 | 2019/02/06 | 08:11:37 | 42.4 |
| 647 | 2019/02/06 | 08:11:38 | 42.2 |
| 648 | 2019/02/06 | 08:11:39 | 42.5 |
| 649 | 2019/02/06 | 08:11:40 | 42.9 |
| 650 | 2019/02/06 | 08:11:41 | 42.1 |
| 651 | 2019/02/06 | 08:11:42 | 43.1 |
| 652 | 2019/02/06 | 08:11:43 | 42.8 |
| 653 | 2019/02/06 | 08:11:44 | 42.7 |
| 654 | 2019/02/06 | 08:11:45 | 41.6 |
| 655 | 2019/02/06 | 08:11:46 | 41.9 |
| 656 | 2019/02/06 | 08:11:47 | 42.1 |
| 657 | 2019/02/06 | 08:11:48 | 41.6 |
| 658 | 2019/02/06 | 08:11:49 | 42.5 |
| 659 | 2019/02/06 | 08:11:50 | 42.8 |
| 660 | 2019/02/06 | 08:11:51 | 42.0 |
| 661 | 2019/02/06 | 08:11:52 | 42.6 |
| 662 | 2019/02/06 | 08:11:53 | 41.8 |
| 663 | 2019/02/06 | 08:11:54 | 42.4 |
| 664 | 2019/02/06 | 08:11:55 | 41.7 |
| 665 | 2019/02/06 | 08:11:56 | 42.9 |
| 666 | 2019/02/06 | 08:11:57 | 42.5 |
| 667 | 2019/02/06 | 08:11:58 | 42.7 |
| 668 | 2019/02/06 | 08:11:59 | 42.7 |
| 669 | 2019/02/06 | 08:12:00 | 42.8 |
| 670 | 2019/02/06 | 08:12:01 | 42.6 |
| 671 | 2019/02/06 | 08:12:02 | 42.5 |
| 672 | 2019/02/06 | 08:12:03 | 42.3 |
| 673 | 2019/02/06 | 08:12:04 | 42.4 |
| 674 | 2019/02/06 | 08:12:05 | 41.9 |
| 675 | 2019/02/06 | 08:12:06 | 42.8 |
| 676 | 2019/02/06 | 08:12:07 | 42.7 |
| 677 | 2019/02/06 | 08:12:08 | 43.0 |
| 678 | 2019/02/06 | 08:12:09 | 43.0 |
| 679 | 2019/02/06 | 08:12:10 | 42.8 |

| | | | |
|---|---|---|---|
| 680 | 2019/02/06 | 08:12:11 | 42.4 |
| 681 | 2019/02/06 | 08:12:12 | 42.2 |
| 682 | 2019/02/06 | 08:12:13 | 42.8 |
| 683 | 2019/02/06 | 08:12:14 | 42.5 |
| 684 | 2019/02/06 | 08:12:15 | 43.0 |
| 685 | 2019/02/06 | 08:12:16 | 42.6 |
| 686 | 2019/02/06 | 08:12:17 | 42.7 |
| 687 | 2019/02/06 | 08:12:18 | 47.0 |
| 688 | 2019/02/06 | 08:12:19 | 43.6 |
| 689 | 2019/02/06 | 08:12:20 | 43.3 |
| 690 | 2019/02/06 | 08:12:21 | 43.8 |
| 691 | 2019/02/06 | 08:12:22 | 42.8 |
| 692 | 2019/02/06 | 08:12:23 | 43.3 |
| 693 | 2019/02/06 | 08:12:24 | 45.1 |
| 694 | 2019/02/06 | 08:12:25 | 42.7 |
| 695 | 2019/02/06 | 08:12:26 | 43.9 |
| 696 | 2019/02/06 | 08:12:27 | 44.6 |
| 697 | 2019/02/06 | 08:12:28 | 42.7 |
| 698 | 2019/02/06 | 08:12:29 | 43.8 |
| 699 | 2019/02/06 | 08:12:30 | 42.0 |
| 700 | 2019/02/06 | 08:12:31 | 44.3 |
| 701 | 2019/02/06 | 08:12:32 | 43.1 |
| 702 | 2019/02/06 | 08:12:33 | 42.2 |
| 703 | 2019/02/06 | 08:12:34 | 42.3 |
| 704 | 2019/02/06 | 08:12:35 | 43.2 |
| 705 | 2019/02/06 | 08:12:36 | 42.3 |
| 706 | 2019/02/06 | 08:12:37 | 43.2 |
| 707 | 2019/02/06 | 08:12:38 | 41.8 |
| 708 | 2019/02/06 | 08:12:39 | 42.6 |
| 709 | 2019/02/06 | 08:12:40 | 42.4 |
| 710 | 2019/02/06 | 08:12:41 | 42.8 |
| 711 | 2019/02/06 | 08:12:42 | 42.8 |
| 712 | 2019/02/06 | 08:12:43 | 42.4 |
| 713 | 2019/02/06 | 08:12:44 | 41.3 |
| 714 | 2019/02/06 | 08:12:45 | 42.6 |
| 715 | 2019/02/06 | 08:12:46 | 45.8 |
| 716 | 2019/02/06 | 08:12:47 | 45.2 |
| 717 | 2019/02/06 | 08:12:48 | 42.4 |
| 718 | 2019/02/06 | 08:12:49 | 41.9 |
| 719 | 2019/02/06 | 08:12:50 | 41.8 |
| 720 | 2019/02/06 | 08:12:51 | 43.0 |
| 721 | 2019/02/06 | 08:12:52 | 42.7 |
| 722 | 2019/02/06 | 08:12:53 | 42.5 |
| 723 | 2019/02/06 | 08:12:54 | 42.3 |
| 724 | 2019/02/06 | 08:12:55 | 41.6 |
| 725 | 2019/02/06 | 08:12:56 | 42.0 |
| 726 | 2019/02/06 | 08:12:57 | 42.1 |
| 727 | 2019/02/06 | 08:12:58 | 45.5 |
| 728 | 2019/02/06 | 08:12:59 | 41.7 |
| 729 | 2019/02/06 | 08:13:00 | 46.9 |
| 730 | 2019/02/06 | 08:13:01 | 41.0 |
| 731 | 2019/02/06 | 08:13:02 | 42.1 |
| 732 | 2019/02/06 | 08:13:03 | 41.6 |
| 733 | 2019/02/06 | 08:13:04 | 43.0 |
| 734 | 2019/02/06 | 08:13:05 | 46.3 |
| 735 | 2019/02/06 | 08:13:06 | 47.5 |
| 736 | 2019/02/06 | 08:13:07 | 45.1 |
| 737 | 2019/02/06 | 08:13:08 | 41.9 |
| 738 | 2019/02/06 | 08:13:09 | 42.5 |
| 739 | 2019/02/06 | 08:13:10 | 42.2 |
| 740 | 2019/02/06 | 08:13:11 | 41.9 |
| 741 | 2019/02/06 | 08:13:12 | 41.9 |
| 742 | 2019/02/06 | 08:13:13 | 43.0 |
| 743 | 2019/02/06 | 08:13:14 | 42.5 |
| 744 | 2019/02/06 | 08:13:15 | 42.4 |
| 745 | 2019/02/06 | 08:13:16 | 41.4 |
| 746 | 2019/02/06 | 08:13:17 | 41.0 |
| 747 | 2019/02/06 | 08:13:18 | 40.9 |
| 748 | 2019/02/06 | 08:13:19 | 40.2 |
| 749 | 2019/02/06 | 08:13:20 | 42.1 |
| 750 | 2019/02/06 | 08:13:21 | 43.4 |
| 751 | 2019/02/06 | 08:13:22 | 40.5 |
| 752 | 2019/02/06 | 08:13:23 | 40.6 |
| 753 | 2019/02/06 | 08:13:24 | 40.6 |
| 754 | 2019/02/06 | 08:13:25 | 41.4 |
| 755 | 2019/02/06 | 08:13:26 | 43.7 |
| 756 | 2019/02/06 | 08:13:27 | 41.6 |
| 757 | 2019/02/06 | 08:13:28 | 41.3 |
| 758 | 2019/02/06 | 08:13:29 | 41.7 |
| 759 | 2019/02/06 | 08:13:30 | 41.1 |
| 760 | 2019/02/06 | 08:13:31 | 41.5 |
| 761 | 2019/02/06 | 08:13:32 | 42.2 |
| 762 | 2019/02/06 | 08:13:33 | 41.8 |
| 763 | 2019/02/06 | 08:13:34 | 41.7 |
| 764 | 2019/02/06 | 08:13:35 | 42.9 |
| 765 | 2019/02/06 | 08:13:36 | 42.4 |
| 766 | 2019/02/06 | 08:13:37 | 42.6 |
| 767 | 2019/02/06 | 08:13:38 | 43.5 |
| 768 | 2019/02/06 | 08:13:39 | 43.0 |
| 769 | 2019/02/06 | 08:13:40 | 43.0 |
| 770 | 2019/02/06 | 08:13:41 | 43.3 |
| 771 | 2019/02/06 | 08:13:42 | 42.8 |
| 772 | 2019/02/06 | 08:13:43 | 43.7 |
| 773 | 2019/02/06 | 08:13:44 | 43.6 |
| 774 | 2019/02/06 | 08:13:45 | 43.2 |
| 775 | 2019/02/06 | 08:13:46 | 42.9 |
| 776 | 2019/02/06 | 08:13:47 | 43.7 |
| 777 | 2019/02/06 | 08:13:48 | 44.1 |
| 778 | 2019/02/06 | 08:13:49 | 41.9 |

| | | | |
|---|---|---|---|
| 779 | 2019/02/06 | 08:13:50 | 44.2 |
| 780 | 2019/02/06 | 08:13:51 | 43.4 |
| 781 | 2019/02/06 | 08:13:52 | 43.4 |
| 782 | 2019/02/06 | 08:13:53 | 45.1 |
| 783 | 2019/02/06 | 08:13:54 | 45.5 |
| 784 | 2019/02/06 | 08:13:55 | 44.7 |
| 785 | 2019/02/06 | 08:13:56 | 42.3 |
| 786 | 2019/02/06 | 08:13:57 | 45.3 |
| 787 | 2019/02/06 | 08:13:58 | 46.9 |
| 788 | 2019/02/06 | 08:13:59 | 42.9 |
| 789 | 2019/02/06 | 08:14:00 | 44.8 |
| 790 | 2019/02/06 | 08:14:01 | 47.2 |
| 791 | 2019/02/06 | 08:14:02 | 43.8 |
| 792 | 2019/02/06 | 08:14:03 | 45.2 |
| 793 | 2019/02/06 | 08:14:04 | 44.1 |
| 794 | 2019/02/06 | 08:14:05 | 43.0 |
| 795 | 2019/02/06 | 08:14:06 | 44.1 |
| 796 | 2019/02/06 | 08:14:07 | 45.2 |
| 797 | 2019/02/06 | 08:14:08 | 47.2 |
| 798 | 2019/02/06 | 08:14:09 | 43.9 |
| 799 | 2019/02/06 | 08:14:10 | 43.9 |
| 800 | 2019/02/06 | 08:14:11 | 47.9 |
| 801 | 2019/02/06 | 08:14:12 | 45.9 |
| 802 | 2019/02/06 | 08:14:13 | 45.9 |
| 803 | 2019/02/06 | 08:14:14 | 44.5 |
| 804 | 2019/02/06 | 08:14:15 | 43.3 |
| 805 | 2019/02/06 | 08:14:16 | 43.7 |
| 806 | 2019/02/06 | 08:14:17 | 45.5 |
| 807 | 2019/02/06 | 08:14:18 | 44.4 |
| 808 | 2019/02/06 | 08:14:19 | 43.3 |
| 809 | 2019/02/06 | 08:14:20 | 45.1 |
| 810 | 2019/02/06 | 08:14:21 | 45.2 |
| 811 | 2019/02/06 | 08:14:22 | 46.0 |
| 812 | 2019/02/06 | 08:14:23 | 45.0 |
| 813 | 2019/02/06 | 08:14:24 | 42.8 |
| 814 | 2019/02/06 | 08:14:25 | 43.7 |
| 815 | 2019/02/06 | 08:14:26 | 44.4 |
| 816 | 2019/02/06 | 08:14:27 | 44.3 |
| 817 | 2019/02/06 | 08:14:28 | 43.7 |
| 818 | 2019/02/06 | 08:14:29 | 43.5 |
| 819 | 2019/02/06 | 08:14:30 | 44.7 |
| 820 | 2019/02/06 | 08:14:31 | 43.5 |
| 821 | 2019/02/06 | 08:14:32 | 43.4 |
| 822 | 2019/02/06 | 08:14:33 | 43.7 |
| 823 | 2019/02/06 | 08:14:34 | 45.7 |
| 824 | 2019/02/06 | 08:14:35 | 43.3 |
| 825 | 2019/02/06 | 08:14:36 | 44.3 |
| 826 | 2019/02/06 | 08:14:37 | 43.9 |
| 827 | 2019/02/06 | 08:14:38 | 43.9 |
| 828 | 2019/02/06 | 08:14:39 | 43.6 |
| 829 | 2019/02/06 | 08:14:40 | 43.6 |
| 830 | 2019/02/06 | 08:14:41 | 43.3 |
| 831 | 2019/02/06 | 08:14:42 | 43.2 |
| 832 | 2019/02/06 | 08:14:43 | 43.1 |
| 833 | 2019/02/06 | 08:14:44 | 43.0 |
| 834 | 2019/02/06 | 08:14:45 | 43.3 |
| 835 | 2019/02/06 | 08:14:46 | 43.5 |
| 836 | 2019/02/06 | 08:14:47 | 43.5 |
| 837 | 2019/02/06 | 08:14:48 | 43.7 |
| 838 | 2019/02/06 | 08:14:49 | 43.9 |
| 839 | 2019/02/06 | 08:14:50 | 43.2 |
| 840 | 2019/02/06 | 08:14:51 | 43.6 |
| 841 | 2019/02/06 | 08:14:52 | 43.7 |
| 842 | 2019/02/06 | 08:14:53 | 43.3 |
| 843 | 2019/02/06 | 08:14:54 | 43.3 |
| 844 | 2019/02/06 | 08:14:55 | 43.9 |
| 845 | 2019/02/06 | 08:14:56 | 44.4 |
| 846 | 2019/02/06 | 08:14:57 | 44.7 |
| 847 | 2019/02/06 | 08:14:58 | 43.7 |
| 848 | 2019/02/06 | 08:14:59 | 45.4 |
| 849 | 2019/02/06 | 08:15:00 | 43.2 |
| 850 | 2019/02/06 | 08:15:01 | 43.5 |
| 851 | 2019/02/06 | 08:15:02 | 43.3 |
| 852 | 2019/02/06 | 08:15:03 | 42.7 |
| 853 | 2019/02/06 | 08:15:04 | 42.9 |
| 854 | 2019/02/06 | 08:15:05 | 43.9 |
| 855 | 2019/02/06 | 08:15:06 | 43.6 |
| 856 | 2019/02/06 | 08:15:07 | 43.1 |
| 857 | 2019/02/06 | 08:15:08 | 42.4 |
| 858 | 2019/02/06 | 08:15:09 | 42.0 |
| 859 | 2019/02/06 | 08:15:10 | 42.1 |
| 860 | 2019/02/06 | 08:15:11 | 43.2 |
| 861 | 2019/02/06 | 08:15:12 | 43.8 |
| 862 | 2019/02/06 | 08:15:13 | 43.0 |
| 863 | 2019/02/06 | 08:15:14 | 46.1 |
| 864 | 2019/02/06 | 08:15:15 | 43.1 |
| 865 | 2019/02/06 | 08:15:16 | 42.5 |
| 866 | 2019/02/06 | 08:15:17 | 42.9 |
| 867 | 2019/02/06 | 08:15:18 | 43.1 |
| 868 | 2019/02/06 | 08:15:19 | 42.9 |
| 869 | 2019/02/06 | 08:15:20 | 42.6 |
| 870 | 2019/02/06 | 08:15:21 | 43.3 |
| 871 | 2019/02/06 | 08:15:22 | 42.4 |
| 872 | 2019/02/06 | 08:15:23 | 43.2 |
| 873 | 2019/02/06 | 08:15:24 | 43.0 |
| 874 | 2019/02/06 | 08:15:25 | 43.1 |
| 875 | 2019/02/06 | 08:15:26 | 42.8 |
| 876 | 2019/02/06 | 08:15:27 | 42.1 |
| 877 | 2019/02/06 | 08:15:28 | 43.5 |

| | | | |
|---|---|---|---|
| 878 | 2019/02/06 | 08:15:29 | 42.2 |
| 879 | 2019/02/06 | 08:15:30 | 43.5 |
| 880 | 2019/02/06 | 08:15:31 | 42.5 |
| 881 | 2019/02/06 | 08:15:32 | 42.3 |
| 882 | 2019/02/06 | 08:15:33 | 42.6 |
| 883 | 2019/02/06 | 08:15:34 | 42.6 |
| 884 | 2019/02/06 | 08:15:35 | 43.6 |
| 885 | 2019/02/06 | 08:15:36 | 43.9 |
| 886 | 2019/02/06 | 08:15:37 | 43.3 |
| 887 | 2019/02/06 | 08:15:38 | 43.6 |
| 888 | 2019/02/06 | 08:15:39 | 43.2 |
| 889 | 2019/02/06 | 08:15:40 | 44.1 |
| 890 | 2019/02/06 | 08:15:41 | 43.4 |
| 891 | 2019/02/06 | 08:15:42 | 43.5 |
| 892 | 2019/02/06 | 08:15:43 | 43.1 |
| 893 | 2019/02/06 | 08:15:44 | 43.8 |
| 894 | 2019/02/06 | 08:15:45 | 43.7 |
| 895 | 2019/02/06 | 08:15:46 | 43.3 |
| 896 | 2019/02/06 | 08:15:47 | 43.4 |
| 897 | 2019/02/06 | 08:15:48 | 43.1 |
| 898 | 2019/02/06 | 08:15:49 | 43.2 |
| 899 | 2019/02/06 | 08:15:50 | 43.6 |
| 900 | 2019/02/06 | 08:15:51 | 44.3 |

Noise Measurement 3

- Freq Weight : A
- Time Weight : FAST
- Level Range : 40-100
- Max dB : 78.2 - 2019/02/06 17:06:49
- Level Range : 40-100
- SEL : 99.5
- Leq : 70.0
-

| No.s | Date Time | (dB) |
|---|---|---|
| 1 | 2019/02/06 16:52:08 | 66.9 |
| 2 | 2019/02/06 16:52:09 | 66.1 |
| 3 | 2019/02/06 16:52:10 | 66.5 |
| 4 | 2019/02/06 16:52:11 | 68.3 |
| 5 | 2019/02/06 16:52:12 | 70.7 |
| 6 | 2019/02/06 16:52:13 | 68.9 |
| 7 | 2019/02/06 16:52:14 | 68.8 |
| 8 | 2019/02/06 16:52:15 | 70.0 |
| 9 | 2019/02/06 16:52:16 | 69.3 |
| 10 | 2019/02/06 16:52:17 | 69.5 |
| 11 | 2019/02/06 16:52:18 | 69.8 |
| 12 | 2019/02/06 16:52:19 | 69.5 |
| 13 | 2019/02/06 16:52:20 | 72.4 |
| 14 | 2019/02/06 16:52:21 | 72.7 |
| 15 | 2019/02/06 16:52:22 | 70.6 |
| 16 | 2019/02/06 16:52:23 | 70.6 |
| 17 | 2019/02/06 16:52:24 | 69.0 |
| 18 | 2019/02/06 16:52:25 | 67.8 |
| 19 | 2019/02/06 16:52:26 | 68.5 |
| 20 | 2019/02/06 16:52:27 | 69.3 |
| 21 | 2019/02/06 16:52:28 | 69.1 |
| 22 | 2019/02/06 16:52:29 | 69.5 |
| 23 | 2019/02/06 16:52:30 | 69.7 |
| 24 | 2019/02/06 16:52:31 | 69.9 |
| 25 | 2019/02/06 16:52:32 | 68.9 |
| 26 | 2019/02/06 16:52:33 | 69.5 |
| 27 | 2019/02/06 16:52:34 | 68.8 |
| 28 | 2019/02/06 16:52:35 | 69.7 |
| 29 | 2019/02/06 16:52:36 | 71.0 |
| 30 | 2019/02/06 16:52:37 | 71.2 |
| 31 | 2019/02/06 16:52:38 | 71.5 |
| 32 | 2019/02/06 16:52:39 | 71.5 |
| 33 | 2019/02/06 16:52:40 | 70.7 |
| 34 | 2019/02/06 16:52:41 | 69.4 |
| 35 | 2019/02/06 16:52:42 | 68.4 |
| 36 | 2019/02/06 16:52:43 | 68.2 |
| 37 | 2019/02/06 16:52:44 | 66.6 |
| 38 | 2019/02/06 16:52:45 | 66.4 |
| 39 | 2019/02/06 16:52:46 | 67.4 |
| 40 | 2019/02/06 16:52:47 | 67.0 |
| 41 | 2019/02/06 16:52:48 | 67.5 |
| 42 | 2019/02/06 16:52:49 | 68.1 |
| 43 | 2019/02/06 16:52:50 | 68.2 |
| 44 | 2019/02/06 16:52:51 | 69.2 |
| 45 | 2019/02/06 16:52:52 | 71.2 |
| 46 | 2019/02/06 16:52:53 | 71.3 |
| 47 | 2019/02/06 16:52:54 | 69.9 |
| 48 | 2019/02/06 16:52:55 | 68.1 |
| 49 | 2019/02/06 16:52:56 | 68.2 |
| 50 | 2019/02/06 16:52:57 | 69.5 |
| 51 | 2019/02/06 16:52:58 | 71.0 |
| 52 | 2019/02/06 16:52:59 | 70.7 |
| 53 | 2019/02/06 16:53:00 | 71.3 |
| 54 | 2019/02/06 16:53:01 | 69.8 |
| 55 | 2019/02/06 16:53:02 | 68.3 |
| 56 | 2019/02/06 16:53:03 | 67.4 |
| 57 | 2019/02/06 16:53:04 | 67.7 |
| 58 | 2019/02/06 16:53:05 | 69.6 |
| 59 | 2019/02/06 16:53:06 | 68.7 |
| 60 | 2019/02/06 16:53:07 | 69.0 |
| 61 | 2019/02/06 16:53:08 | 71.8 |
| 62 | 2019/02/06 16:53:09 | 72.9 |
| 63 | 2019/02/06 16:53:10 | 71.6 |
| 64 | 2019/02/06 16:53:11 | 70.8 |
| 65 | 2019/02/06 16:53:12 | 70.6 |
| 66 | 2019/02/06 16:53:13 | 73.0 |
| 67 | 2019/02/06 16:53:14 | 70.6 |
| 68 | 2019/02/06 16:53:15 | 68.3 |
| 69 | 2019/02/06 16:53:16 | 66.7 |
| 70 | 2019/02/06 16:53:17 | 66.9 |
| 71 | 2019/02/06 16:53:18 | 66.2 |
| 72 | 2019/02/06 16:53:19 | 66.8 |
| 73 | 2019/02/06 16:53:20 | 67.6 |
| 74 | 2019/02/06 16:53:21 | 66.3 |
| 75 | 2019/02/06 16:53:22 | 67.8 |
| 76 | 2019/02/06 16:53:23 | 67.6 |
| 77 | 2019/02/06 16:53:24 | 70.2 |
| 78 | 2019/02/06 16:53:25 | 69.0 |
| 79 | 2019/02/06 16:53:26 | 66.7 |
| 80 | 2019/02/06 16:53:27 | 67.4 |
| 81 | 2019/02/06 16:53:28 | 68.1 |
| 82 | 2019/02/06 16:53:29 | 67.6 |
| 83 | 2019/02/06 16:53:30 | 67.7 |
| 84 | 2019/02/06 16:53:31 | 67.5 |
| 85 | 2019/02/06 16:53:32 | 67.1 |

| | | |
|---|---|---|
| 86 | 2019/02/06 16:53:33 | 66.9 |
| 87 | 2019/02/06 16:53:34 | 67.3 |
| 88 | 2019/02/06 16:53:35 | 68.1 |
| 89 | 2019/02/06 16:53:36 | 69.1 |
| 90 | 2019/02/06 16:53:37 | 67.8 |
| 91 | 2019/02/06 16:53:38 | 66.9 |
| 92 | 2019/02/06 16:53:39 | 68.0 |
| 93 | 2019/02/06 16:53:40 | 68.0 |
| 94 | 2019/02/06 16:53:41 | 69.3 |
| 95 | 2019/02/06 16:53:42 | 70.0 |
| 96 | 2019/02/06 16:53:43 | 69.3 |
| 97 | 2019/02/06 16:53:44 | 70.1 |
| 98 | 2019/02/06 16:53:45 | 69.3 |
| 99 | 2019/02/06 16:53:46 | 71.6 |
| 100 | 2019/02/06 16:53:47 | 72.0 |
| 101 | 2019/02/06 16:53:48 | 72.0 |
| 102 | 2019/02/06 16:53:49 | 71.3 |
| 103 | 2019/02/06 16:53:50 | 71.7 |
| 104 | 2019/02/06 16:53:51 | 71.6 |
| 105 | 2019/02/06 16:53:52 | 71.8 |
| 106 | 2019/02/06 16:53:53 | 72.6 |
| 107 | 2019/02/06 16:53:54 | 72.3 |
| 108 | 2019/02/06 16:53:55 | 71.9 |
| 109 | 2019/02/06 16:53:56 | 70.8 |
| 110 | 2019/02/06 16:53:57 | 70.0 |
| 111 | 2019/02/06 16:53:58 | 69.8 |
| 112 | 2019/02/06 16:53:59 | 69.2 |
| 113 | 2019/02/06 16:54:00 | 69.1 |
| 114 | 2019/02/06 16:54:01 | 67.9 |
| 115 | 2019/02/06 16:54:02 | 69.2 |
| 116 | 2019/02/06 16:54:03 | 69.1 |
| 117 | 2019/02/06 16:54:04 | 70.5 |
| 118 | 2019/02/06 16:54:05 | 70.1 |
| 119 | 2019/02/06 16:54:06 | 71.5 |
| 120 | 2019/02/06 16:54:07 | 68.9 |
| 121 | 2019/02/06 16:54:08 | 68.6 |
| 122 | 2019/02/06 16:54:09 | 69.8 |
| 123 | 2019/02/06 16:54:10 | 70.1 |
| 124 | 2019/02/06 16:54:11 | 69.7 |
| 125 | 2019/02/06 16:54:12 | 70.4 |
| 126 | 2019/02/06 16:54:13 | 68.8 |
| 127 | 2019/02/06 16:54:14 | 70.0 |
| 128 | 2019/02/06 16:54:15 | 71.3 |
| 129 | 2019/02/06 16:54:16 | 70.2 |
| 130 | 2019/02/06 16:54:17 | 70.5 |
| 131 | 2019/02/06 16:54:18 | 69.5 |
| 132 | 2019/02/06 16:54:19 | 67.7 |
| 133 | 2019/02/06 16:54:20 | 67.8 |
| 134 | 2019/02/06 16:54:21 | 67.0 |
| 135 | 2019/02/06 16:54:22 | 68.5 |
| 136 | 2019/02/06 16:54:23 | 65.8 |
| 137 | 2019/02/06 16:54:24 | 67.7 |
| 138 | 2019/02/06 16:54:25 | 68.6 |
| 139 | 2019/02/06 16:54:26 | 67.8 |
| 140 | 2019/02/06 16:54:27 | 66.0 |
| 141 | 2019/02/06 16:54:28 | 66.0 |
| 142 | 2019/02/06 16:54:29 | 66.1 |
| 143 | 2019/02/06 16:54:30 | 67.7 |
| 144 | 2019/02/06 16:54:31 | 65.4 |
| 145 | 2019/02/06 16:54:32 | 66.0 |
| 146 | 2019/02/06 16:54:33 | 65.3 |
| 147 | 2019/02/06 16:54:34 | 64.1 |
| 148 | 2019/02/06 16:54:35 | 64.0 |
| 149 | 2019/02/06 16:54:36 | 65.2 |
| 150 | 2019/02/06 16:54:37 | 68.8 |
| 151 | 2019/02/06 16:54:38 | 68.6 |
| 152 | 2019/02/06 16:54:39 | 70.0 |
| 153 | 2019/02/06 16:54:40 | 70.5 |
| 154 | 2019/02/06 16:54:41 | 70.6 |
| 155 | 2019/02/06 16:54:42 | 68.9 |
| 156 | 2019/02/06 16:54:43 | 66.7 |
| 157 | 2019/02/06 16:54:44 | 65.7 |
| 158 | 2019/02/06 16:54:45 | 63.4 |
| 159 | 2019/02/06 16:54:46 | 63.5 |
| 160 | 2019/02/06 16:54:47 | 66.8 |
| 161 | 2019/02/06 16:54:48 | 69.1 |
| 162 | 2019/02/06 16:54:49 | 68.7 |
| 163 | 2019/02/06 16:54:50 | 69.3 |
| 164 | 2019/02/06 16:54:51 | 71.3 |
| 165 | 2019/02/06 16:54:52 | 71.9 |
| 166 | 2019/02/06 16:54:53 | 71.0 |
| 167 | 2019/02/06 16:54:54 | 71.5 |
| 168 | 2019/02/06 16:54:55 | 71.6 |
| 169 | 2019/02/06 16:54:56 | 71.2 |
| 170 | 2019/02/06 16:54:57 | 72.0 |
| 171 | 2019/02/06 16:54:58 | 70.0 |
| 172 | 2019/02/06 16:54:59 | 68.6 |
| 173 | 2019/02/06 16:55:00 | 69.6 |
| 174 | 2019/02/06 16:55:01 | 70.3 |
| 175 | 2019/02/06 16:55:02 | 71.8 |
| 176 | 2019/02/06 16:55:03 | 71.6 |
| 177 | 2019/02/06 16:55:04 | 71.2 |
| 178 | 2019/02/06 16:55:05 | 70.1 |
| 179 | 2019/02/06 16:55:06 | 70.5 |
| 180 | 2019/02/06 16:55:07 | 70.9 |
| 181 | 2019/02/06 16:55:08 | 70.4 |
| 182 | 2019/02/06 16:55:09 | 69.7 |
| 183 | 2019/02/06 16:55:10 | 68.9 |
| 184 | 2019/02/06 16:55:11 | 68.1 |

| | | |
|---|---|---|
| 185 | 2019/02/06 16:55:12 | 68.1 |
| 186 | 2019/02/06 16:55:13 | 66.8 |
| 187 | 2019/02/06 16:55:14 | 67.9 |
| 188 | 2019/02/06 16:55:15 | 68.3 |
| 189 | 2019/02/06 16:55:16 | 69.2 |
| 190 | 2019/02/06 16:55:17 | 69.6 |
| 191 | 2019/02/06 16:55:18 | 69.9 |
| 192 | 2019/02/06 16:55:19 | 70.3 |
| 193 | 2019/02/06 16:55:20 | 70.1 |
| 194 | 2019/02/06 16:55:21 | 70.2 |
| 195 | 2019/02/06 16:55:22 | 71.0 |
| 196 | 2019/02/06 16:55:23 | 72.3 |
| 197 | 2019/02/06 16:55:24 | 71.8 |
| 198 | 2019/02/06 16:55:25 | 71.5 |
| 199 | 2019/02/06 16:55:26 | 71.8 |
| 200 | 2019/02/06 16:55:27 | 70.9 |
| 201 | 2019/02/06 16:55:28 | 71.4 |
| 202 | 2019/02/06 16:55:29 | 70.7 |
| 203 | 2019/02/06 16:55:30 | 71.3 |
| 204 | 2019/02/06 16:55:31 | 71.1 |
| 205 | 2019/02/06 16:55:32 | 71.8 |
| 206 | 2019/02/06 16:55:33 | 71.2 |
| 207 | 2019/02/06 16:55:34 | 70.9 |
| 208 | 2019/02/06 16:55:35 | 69.9 |
| 209 | 2019/02/06 16:55:36 | 69.8 |
| 210 | 2019/02/06 16:55:37 | 71.1 |
| 211 | 2019/02/06 16:55:38 | 70.6 |
| 212 | 2019/02/06 16:55:39 | 72.4 |
| 213 | 2019/02/06 16:55:40 | 72.9 |
| 214 | 2019/02/06 16:55:41 | 71.2 |
| 215 | 2019/02/06 16:55:42 | 72.0 |
| 216 | 2019/02/06 16:55:43 | 72.1 |
| 217 | 2019/02/06 16:55:44 | 71.1 |
| 218 | 2019/02/06 16:55:45 | 71.4 |
| 219 | 2019/02/06 16:55:46 | 70.5 |
| 220 | 2019/02/06 16:55:47 | 71.6 |
| 221 | 2019/02/06 16:55:48 | 71.3 |
| 222 | 2019/02/06 16:55:49 | 69.6 |
| 223 | 2019/02/06 16:55:50 | 68.3 |
| 224 | 2019/02/06 16:55:51 | 66.3 |
| 225 | 2019/02/06 16:55:52 | 66.5 |
| 226 | 2019/02/06 16:55:53 | 65.1 |
| 227 | 2019/02/06 16:55:54 | 68.3 |
| 228 | 2019/02/06 16:55:55 | 68.2 |
| 229 | 2019/02/06 16:55:56 | 68.3 |
| 230 | 2019/02/06 16:55:57 | 68.6 |
| 231 | 2019/02/06 16:55:58 | 66.1 |
| 232 | 2019/02/06 16:55:59 | 65.8 |
| 233 | 2019/02/06 16:56:00 | 66.2 |
| 234 | 2019/02/06 16:56:01 | 68.2 |
| 235 | 2019/02/06 16:56:02 | 66.4 |
| 236 | 2019/02/06 16:56:03 | 63.8 |
| 237 | 2019/02/06 16:56:04 | 64.2 |
| 238 | 2019/02/06 16:56:05 | 63.8 |
| 239 | 2019/02/06 16:56:06 | 64.9 |
| 240 | 2019/02/06 16:56:07 | 68.0 |
| 241 | 2019/02/06 16:56:08 | 68.2 |
| 242 | 2019/02/06 16:56:09 | 70.7 |
| 243 | 2019/02/06 16:56:10 | 70.8 |
| 244 | 2019/02/06 16:56:11 | 70.9 |
| 245 | 2019/02/06 16:56:12 | 71.0 |
| 246 | 2019/02/06 16:56:13 | 70.3 |
| 247 | 2019/02/06 16:56:14 | 70.1 |
| 248 | 2019/02/06 16:56:15 | 70.6 |
| 249 | 2019/02/06 16:56:16 | 71.5 |
| 250 | 2019/02/06 16:56:17 | 72.2 |
| 251 | 2019/02/06 16:56:18 | 71.1 |
| 252 | 2019/02/06 16:56:19 | 69.5 |
| 253 | 2019/02/06 16:56:20 | 70.1 |
| 254 | 2019/02/06 16:56:21 | 70.7 |
| 255 | 2019/02/06 16:56:22 | 71.2 |
| 256 | 2019/02/06 16:56:23 | 70.8 |
| 257 | 2019/02/06 16:56:24 | 70.5 |
| 258 | 2019/02/06 16:56:25 | 71.1 |
| 259 | 2019/02/06 16:56:26 | 71.3 |
| 260 | 2019/02/06 16:56:27 | 70.7 |
| 261 | 2019/02/06 16:56:28 | 72.0 |
| 262 | 2019/02/06 16:56:29 | 70.5 |
| 263 | 2019/02/06 16:56:30 | 70.8 |
| 264 | 2019/02/06 16:56:31 | 69.5 |
| 265 | 2019/02/06 16:56:32 | 70.3 |
| 266 | 2019/02/06 16:56:33 | 71.2 |
| 267 | 2019/02/06 16:56:34 | 69.9 |
| 268 | 2019/02/06 16:56:35 | 70.4 |
| 269 | 2019/02/06 16:56:36 | 70.3 |
| 270 | 2019/02/06 16:56:37 | 71.3 |
| 271 | 2019/02/06 16:56:38 | 69.0 |
| 272 | 2019/02/06 16:56:39 | 70.1 |
| 273 | 2019/02/06 16:56:40 | 70.8 |
| 274 | 2019/02/06 16:56:41 | 70.5 |
| 275 | 2019/02/06 16:56:42 | 70.0 |
| 276 | 2019/02/06 16:56:43 | 71.0 |
| 277 | 2019/02/06 16:56:44 | 70.3 |
| 278 | 2019/02/06 16:56:45 | 70.5 |
| 279 | 2019/02/06 16:56:46 | 71.8 |
| 280 | 2019/02/06 16:56:47 | 71.7 |
| 281 | 2019/02/06 16:56:48 | 72.5 |
| 282 | 2019/02/06 16:56:49 | 71.5 |
| 283 | 2019/02/06 16:56:50 | 70.1 |

| | | |
|---|---|---|
| 284 | 2019/02/06 16:56:51 | 70.8 |
| 285 | 2019/02/06 16:56:52 | 69.7 |
| 286 | 2019/02/06 16:56:53 | 70.9 |
| 287 | 2019/02/06 16:56:54 | 69.7 |
| 288 | 2019/02/06 16:56:55 | 70.2 |
| 289 | 2019/02/06 16:56:56 | 69.0 |
| 290 | 2019/02/06 16:56:57 | 69.7 |
| 291 | 2019/02/06 16:56:58 | 70.9 |
| 292 | 2019/02/06 16:56:59 | 69.8 |
| 293 | 2019/02/06 16:57:00 | 67.6 |
| 294 | 2019/02/06 16:57:01 | 65.2 |
| 295 | 2019/02/06 16:57:02 | 63.3 |
| 296 | 2019/02/06 16:57:03 | 61.9 |
| 297 | 2019/02/06 16:57:04 | 61.9 |
| 298 | 2019/02/06 16:57:05 | 63.0 |
| 299 | 2019/02/06 16:57:06 | 65.5 |
| 300 | 2019/02/06 16:57:07 | 69.1 |
| 301 | 2019/02/06 16:57:08 | 70.9 |
| 302 | 2019/02/06 16:57:09 | 70.5 |
| 303 | 2019/02/06 16:57:10 | 68.9 |
| 304 | 2019/02/06 16:57:11 | 68.5 |
| 305 | 2019/02/06 16:57:12 | 68.8 |
| 306 | 2019/02/06 16:57:13 | 70.3 |
| 307 | 2019/02/06 16:57:14 | 71.0 |
| 308 | 2019/02/06 16:57:15 | 70.9 |
| 309 | 2019/02/06 16:57:16 | 70.5 |
| 310 | 2019/02/06 16:57:17 | 70.6 |
| 311 | 2019/02/06 16:57:18 | 70.4 |
| 312 | 2019/02/06 16:57:19 | 69.5 |
| 313 | 2019/02/06 16:57:20 | 68.7 |
| 314 | 2019/02/06 16:57:21 | 69.0 |
| 315 | 2019/02/06 16:57:22 | 69.2 |
| 316 | 2019/02/06 16:57:23 | 69.5 |
| 317 | 2019/02/06 16:57:24 | 69.8 |
| 318 | 2019/02/06 16:57:25 | 70.6 |
| 319 | 2019/02/06 16:57:26 | 70.5 |
| 320 | 2019/02/06 16:57:27 | 72.6 |
| 321 | 2019/02/06 16:57:28 | 70.9 |
| 322 | 2019/02/06 16:57:29 | 69.8 |
| 323 | 2019/02/06 16:57:30 | 69.3 |
| 324 | 2019/02/06 16:57:31 | 71.8 |
| 325 | 2019/02/06 16:57:32 | 71.9 |
| 326 | 2019/02/06 16:57:33 | 71.5 |
| 327 | 2019/02/06 16:57:34 | 73.8 |
| 328 | 2019/02/06 16:57:35 | 72.7 |
| 329 | 2019/02/06 16:57:36 | 71.9 |
| 330 | 2019/02/06 16:57:37 | 70.1 |
| 331 | 2019/02/06 16:57:38 | 70.4 |
| 332 | 2019/02/06 16:57:39 | 74.4 |
| 333 | 2019/02/06 16:57:40 | 73.1 |
| 334 | 2019/02/06 16:57:41 | 72.9 |
| 335 | 2019/02/06 16:57:42 | 73.3 |
| 336 | 2019/02/06 16:57:43 | 71.1 |
| 337 | 2019/02/06 16:57:44 | 72.9 |
| 338 | 2019/02/06 16:57:45 | 73.1 |
| 339 | 2019/02/06 16:57:46 | 72.1 |
| 340 | 2019/02/06 16:57:47 | 72.9 |
| 341 | 2019/02/06 16:57:48 | 72.8 |
| 342 | 2019/02/06 16:57:49 | 73.0 |
| 343 | 2019/02/06 16:57:50 | 73.5 |
| 344 | 2019/02/06 16:57:51 | 72.7 |
| 345 | 2019/02/06 16:57:52 | 71.8 |
| 346 | 2019/02/06 16:57:53 | 71.2 |
| 347 | 2019/02/06 16:57:54 | 71.3 |
| 348 | 2019/02/06 16:57:55 | 71.1 |
| 349 | 2019/02/06 16:57:56 | 71.1 |
| 350 | 2019/02/06 16:57:57 | 72.6 |
| 351 | 2019/02/06 16:57:58 | 73.3 |
| 352 | 2019/02/06 16:57:59 | 72.5 |
| 353 | 2019/02/06 16:58:00 | 71.7 |
| 354 | 2019/02/06 16:58:01 | 70.9 |
| 355 | 2019/02/06 16:58:02 | 71.3 |
| 356 | 2019/02/06 16:58:03 | 70.5 |
| 357 | 2019/02/06 16:58:04 | 71.3 |
| 358 | 2019/02/06 16:58:05 | 71.1 |
| 359 | 2019/02/06 16:58:06 | 70.6 |
| 360 | 2019/02/06 16:58:07 | 69.8 |
| 361 | 2019/02/06 16:58:08 | 71.5 |
| 362 | 2019/02/06 16:58:09 | 69.7 |
| 363 | 2019/02/06 16:58:10 | 69.5 |
| 364 | 2019/02/06 16:58:11 | 67.7 |
| 365 | 2019/02/06 16:58:12 | 67.8 |
| 366 | 2019/02/06 16:58:13 | 69.0 |
| 367 | 2019/02/06 16:58:14 | 69.0 |
| 368 | 2019/02/06 16:58:15 | 69.8 |
| 369 | 2019/02/06 16:58:16 | 71.1 |
| 370 | 2019/02/06 16:58:17 | 71.7 |
| 371 | 2019/02/06 16:58:18 | 70.5 |
| 372 | 2019/02/06 16:58:19 | 69.3 |
| 373 | 2019/02/06 16:58:20 | 69.0 |
| 374 | 2019/02/06 16:58:21 | 69.4 |
| 375 | 2019/02/06 16:58:22 | 69.2 |
| 376 | 2019/02/06 16:58:23 | 70.7 |
| 377 | 2019/02/06 16:58:24 | 71.6 |
| 378 | 2019/02/06 16:58:25 | 73.5 |
| 379 | 2019/02/06 16:58:26 | 71.7 |
| 380 | 2019/02/06 16:58:27 | 71.8 |
| 381 | 2019/02/06 16:58:28 | 71.8 |
| 382 | 2019/02/06 16:58:29 | 71.7 |

| | | |
|---|---|---|
| 383 | 2019/02/06 16:58:30 | 70.5 |
| 384 | 2019/02/06 16:58:31 | 70.7 |
| 385 | 2019/02/06 16:58:32 | 70.5 |
| 386 | 2019/02/06 16:58:33 | 69.7 |
| 387 | 2019/02/06 16:58:34 | 67.6 |
| 388 | 2019/02/06 16:58:35 | 67.1 |
| 389 | 2019/02/06 16:58:36 | 67.7 |
| 390 | 2019/02/06 16:58:37 | 69.9 |
| 391 | 2019/02/06 16:58:38 | 69.2 |
| 392 | 2019/02/06 16:58:39 | 70.3 |
| 393 | 2019/02/06 16:58:40 | 70.2 |
| 394 | 2019/02/06 16:58:41 | 69.9 |
| 395 | 2019/02/06 16:58:42 | 68.3 |
| 396 | 2019/02/06 16:58:43 | 68.5 |
| 397 | 2019/02/06 16:58:44 | 67.5 |
| 398 | 2019/02/06 16:58:45 | 68.8 |
| 399 | 2019/02/06 16:58:46 | 68.9 |
| 400 | 2019/02/06 16:58:47 | 69.5 |
| 401 | 2019/02/06 16:58:48 | 70.9 |
| 402 | 2019/02/06 16:58:49 | 70.3 |
| 403 | 2019/02/06 16:58:50 | 69.8 |
| 404 | 2019/02/06 16:58:51 | 68.6 |
| 405 | 2019/02/06 16:58:52 | 68.5 |
| 406 | 2019/02/06 16:58:53 | 68.0 |
| 407 | 2019/02/06 16:58:54 | 68.4 |
| 408 | 2019/02/06 16:58:55 | 70.1 |
| 409 | 2019/02/06 16:58:56 | 70.3 |
| 410 | 2019/02/06 16:58:57 | 68.3 |
| 411 | 2019/02/06 16:58:58 | 67.7 |
| 412 | 2019/02/06 16:58:59 | 69.1 |
| 413 | 2019/02/06 16:59:00 | 70.7 |
| 414 | 2019/02/06 16:59:01 | 69.7 |
| 415 | 2019/02/06 16:59:02 | 69.2 |
| 416 | 2019/02/06 16:59:03 | 67.5 |
| 417 | 2019/02/06 16:59:04 | 66.9 |
| 418 | 2019/02/06 16:59:05 | 68.4 |
| 419 | 2019/02/06 16:59:06 | 70.8 |
| 420 | 2019/02/06 16:59:07 | 72.4 |
| 421 | 2019/02/06 16:59:08 | 71.5 |
| 422 | 2019/02/06 16:59:09 | 70.1 |
| 423 | 2019/02/06 16:59:10 | 71.5 |
| 424 | 2019/02/06 16:59:11 | 71.0 |
| 425 | 2019/02/06 16:59:12 | 70.9 |
| 426 | 2019/02/06 16:59:13 | 72.3 |
| 427 | 2019/02/06 16:59:14 | 70.3 |
| 428 | 2019/02/06 16:59:15 | 71.0 |
| 429 | 2019/02/06 16:59:16 | 70.7 |
| 430 | 2019/02/06 16:59:17 | 69.5 |
| 431 | 2019/02/06 16:59:18 | 70.4 |
| 432 | 2019/02/06 16:59:19 | 69.9 |
| 433 | 2019/02/06 16:59:20 | 68.4 |
| 434 | 2019/02/06 16:59:21 | 68.0 |
| 435 | 2019/02/06 16:59:22 | 66.9 |
| 436 | 2019/02/06 16:59:23 | 68.9 |
| 437 | 2019/02/06 16:59:24 | 68.8 |
| 438 | 2019/02/06 16:59:25 | 67.2 |
| 439 | 2019/02/06 16:59:26 | 68.7 |
| 440 | 2019/02/06 16:59:27 | 66.9 |
| 441 | 2019/02/06 16:59:28 | 66.3 |
| 442 | 2019/02/06 16:59:29 | 68.4 |
| 443 | 2019/02/06 16:59:30 | 71.1 |
| 444 | 2019/02/06 16:59:31 | 68.1 |
| 445 | 2019/02/06 16:59:32 | 67.1 |
| 446 | 2019/02/06 16:59:33 | 66.5 |
| 447 | 2019/02/06 16:59:34 | 69.7 |
| 448 | 2019/02/06 16:59:35 | 69.1 |
| 449 | 2019/02/06 16:59:36 | 69.8 |
| 450 | 2019/02/06 16:59:37 | 69.8 |
| 451 | 2019/02/06 16:59:38 | 69.7 |
| 452 | 2019/02/06 16:59:39 | 68.7 |
| 453 | 2019/02/06 16:59:40 | 68.9 |
| 454 | 2019/02/06 16:59:41 | 68.3 |
| 455 | 2019/02/06 16:59:42 | 69.0 |
| 456 | 2019/02/06 16:59:43 | 68.3 |
| 457 | 2019/02/06 16:59:44 | 67.3 |
| 458 | 2019/02/06 16:59:45 | 67.8 |
| 459 | 2019/02/06 16:59:46 | 67.2 |
| 460 | 2019/02/06 16:59:47 | 67.0 |
| 461 | 2019/02/06 16:59:48 | 67.4 |
| 462 | 2019/02/06 16:59:49 | 68.0 |
| 463 | 2019/02/06 16:59:50 | 68.7 |
| 464 | 2019/02/06 16:59:51 | 67.1 |
| 465 | 2019/02/06 16:59:52 | 68.0 |
| 466 | 2019/02/06 16:59:53 | 70.0 |
| 467 | 2019/02/06 16:59:54 | 71.5 |
| 468 | 2019/02/06 16:59:55 | 68.8 |
| 469 | 2019/02/06 16:59:56 | 68.8 |
| 470 | 2019/02/06 16:59:57 | 69.3 |
| 471 | 2019/02/06 16:59:58 | 70.3 |
| 472 | 2019/02/06 16:59:59 | 72.3 |
| 473 | 2019/02/06 17:00:00 | 72.4 |
| 474 | 2019/02/06 17:00:01 | 72.4 |
| 475 | 2019/02/06 17:00:02 | 71.6 |
| 476 | 2019/02/06 17:00:03 | 72.0 |
| 477 | 2019/02/06 17:00:04 | 71.4 |
| 478 | 2019/02/06 17:00:05 | 71.5 |
| 479 | 2019/02/06 17:00:06 | 71.0 |
| 480 | 2019/02/06 17:00:07 | 70.6 |
| 481 | 2019/02/06 17:00:08 | 69.9 |

| | | |
|---|---|---|
| 482 | 2019/02/06 17:00:09 | 67.8 |
| 483 | 2019/02/06 17:00:10 | 67.4 |
| 484 | 2019/02/06 17:00:11 | 68.5 |
| 485 | 2019/02/06 17:00:12 | 70.4 |
| 486 | 2019/02/06 17:00:13 | 68.9 |
| 487 | 2019/02/06 17:00:14 | 70.0 |
| 488 | 2019/02/06 17:00:15 | 70.6 |
| 489 | 2019/02/06 17:00:16 | 70.9 |
| 490 | 2019/02/06 17:00:17 | 72.1 |
| 491 | 2019/02/06 17:00:18 | 69.8 |
| 492 | 2019/02/06 17:00:19 | 69.6 |
| 493 | 2019/02/06 17:00:20 | 70.4 |
| 494 | 2019/02/06 17:00:21 | 70.2 |
| 495 | 2019/02/06 17:00:22 | 69.7 |
| 496 | 2019/02/06 17:00:23 | 67.5 |
| 497 | 2019/02/06 17:00:24 | 69.2 |
| 498 | 2019/02/06 17:00:25 | 67.9 |
| 499 | 2019/02/06 17:00:26 | 66.9 |
| 500 | 2019/02/06 17:00:27 | 67.4 |
| 501 | 2019/02/06 17:00:28 | 66.2 |
| 502 | 2019/02/06 17:00:29 | 66.7 |
| 503 | 2019/02/06 17:00:30 | 66.0 |
| 504 | 2019/02/06 17:00:31 | 64.7 |
| 505 | 2019/02/06 17:00:32 | 63.2 |
| 506 | 2019/02/06 17:00:33 | 64.7 |
| 507 | 2019/02/06 17:00:34 | 66.0 |
| 508 | 2019/02/06 17:00:35 | 66.9 |
| 509 | 2019/02/06 17:00:36 | 67.0 |
| 510 | 2019/02/06 17:00:37 | 70.7 |
| 511 | 2019/02/06 17:00:38 | 69.5 |
| 512 | 2019/02/06 17:00:39 | 68.2 |
| 513 | 2019/02/06 17:00:40 | 69.7 |
| 514 | 2019/02/06 17:00:41 | 66.2 |
| 515 | 2019/02/06 17:00:42 | 66.9 |
| 516 | 2019/02/06 17:00:43 | 69.9 |
| 517 | 2019/02/06 17:00:44 | 69.7 |
| 518 | 2019/02/06 17:00:45 | 70.3 |
| 519 | 2019/02/06 17:00:46 | 68.2 |
| 520 | 2019/02/06 17:00:47 | 67.2 |
| 521 | 2019/02/06 17:00:48 | 66.4 |
| 522 | 2019/02/06 17:00:49 | 66.7 |
| 523 | 2019/02/06 17:00:50 | 67.4 |
| 524 | 2019/02/06 17:00:51 | 66.6 |
| 525 | 2019/02/06 17:00:52 | 67.2 |
| 526 | 2019/02/06 17:00:53 | 66.2 |
| 527 | 2019/02/06 17:00:54 | 66.2 |
| 528 | 2019/02/06 17:00:55 | 68.1 |
| 529 | 2019/02/06 17:00:56 | 69.1 |
| 530 | 2019/02/06 17:00:57 | 68.6 |
| 531 | 2019/02/06 17:00:58 | 67.8 |
| 532 | 2019/02/06 17:00:59 | 67.8 |
| 533 | 2019/02/06 17:01:00 | 68.9 |
| 534 | 2019/02/06 17:01:01 | 67.3 |
| 535 | 2019/02/06 17:01:02 | 68.9 |
| 536 | 2019/02/06 17:01:03 | 70.3 |
| 537 | 2019/02/06 17:01:04 | 70.7 |
| 538 | 2019/02/06 17:01:05 | 71.1 |
| 539 | 2019/02/06 17:01:06 | 69.3 |
| 540 | 2019/02/06 17:01:07 | 71.5 |
| 541 | 2019/02/06 17:01:08 | 72.8 |
| 542 | 2019/02/06 17:01:09 | 73.4 |
| 543 | 2019/02/06 17:01:10 | 74.1 |
| 544 | 2019/02/06 17:01:11 | 73.4 |
| 545 | 2019/02/06 17:01:12 | 73.6 |
| 546 | 2019/02/06 17:01:13 | 73.9 |
| 547 | 2019/02/06 17:01:14 | 72.5 |
| 548 | 2019/02/06 17:01:15 | 72.2 |
| 549 | 2019/02/06 17:01:16 | 73.4 |
| 550 | 2019/02/06 17:01:17 | 72.3 |
| 551 | 2019/02/06 17:01:18 | 69.5 |
| 552 | 2019/02/06 17:01:19 | 69.2 |
| 553 | 2019/02/06 17:01:20 | 69.0 |
| 554 | 2019/02/06 17:01:21 | 69.7 |
| 555 | 2019/02/06 17:01:22 | 69.3 |
| 556 | 2019/02/06 17:01:23 | 68.3 |
| 557 | 2019/02/06 17:01:24 | 67.5 |
| 558 | 2019/02/06 17:01:25 | 68.4 |
| 559 | 2019/02/06 17:01:26 | 70.9 |
| 560 | 2019/02/06 17:01:27 | 69.8 |
| 561 | 2019/02/06 17:01:28 | 69.9 |
| 562 | 2019/02/06 17:01:29 | 70.1 |
| 563 | 2019/02/06 17:01:30 | 69.2 |
| 564 | 2019/02/06 17:01:31 | 69.0 |
| 565 | 2019/02/06 17:01:32 | 68.6 |
| 566 | 2019/02/06 17:01:33 | 67.6 |
| 567 | 2019/02/06 17:01:34 | 66.7 |
| 568 | 2019/02/06 17:01:35 | 65.9 |
| 569 | 2019/02/06 17:01:36 | 68.0 |
| 570 | 2019/02/06 17:01:37 | 67.1 |
| 571 | 2019/02/06 17:01:38 | 66.7 |
| 572 | 2019/02/06 17:01:39 | 66.9 |
| 573 | 2019/02/06 17:01:40 | 67.3 |
| 574 | 2019/02/06 17:01:41 | 69.2 |
| 575 | 2019/02/06 17:01:42 | 71.2 |
| 576 | 2019/02/06 17:01:43 | 72.3 |
| 577 | 2019/02/06 17:01:44 | 71.5 |
| 578 | 2019/02/06 17:01:45 | 71.9 |
| 579 | 2019/02/06 17:01:46 | 70.7 |
| 580 | 2019/02/06 17:01:47 | 70.9 |

| | | |
|---|---|---|
| 581 | 2019/02/06 17:01:48 | 69.5 |
| 582 | 2019/02/06 17:01:49 | 70.1 |
| 583 | 2019/02/06 17:01:50 | 69.2 |
| 584 | 2019/02/06 17:01:51 | 67.4 |
| 585 | 2019/02/06 17:01:52 | 68.0 |
| 586 | 2019/02/06 17:01:53 | 68.1 |
| 587 | 2019/02/06 17:01:54 | 66.3 |
| 588 | 2019/02/06 17:01:55 | 66.1 |
| 589 | 2019/02/06 17:01:56 | 66.7 |
| 590 | 2019/02/06 17:01:57 | 67.4 |
| 591 | 2019/02/06 17:01:58 | 65.6 |
| 592 | 2019/02/06 17:01:59 | 65.1 |
| 593 | 2019/02/06 17:02:00 | 65.4 |
| 594 | 2019/02/06 17:02:01 | 68.4 |
| 595 | 2019/02/06 17:02:02 | 67.8 |
| 596 | 2019/02/06 17:02:03 | 67.8 |
| 597 | 2019/02/06 17:02:04 | 67.7 |
| 598 | 2019/02/06 17:02:05 | 67.2 |
| 599 | 2019/02/06 17:02:06 | 68.5 |
| 600 | 2019/02/06 17:02:07 | 69.0 |
| 601 | 2019/02/06 17:02:08 | 65.6 |
| 602 | 2019/02/06 17:02:09 | 66.2 |
| 603 | 2019/02/06 17:02:10 | 66.7 |
| 604 | 2019/02/06 17:02:11 | 65.7 |
| 605 | 2019/02/06 17:02:12 | 65.7 |
| 606 | 2019/02/06 17:02:13 | 66.8 |
| 607 | 2019/02/06 17:02:14 | 66.7 |
| 608 | 2019/02/06 17:02:15 | 67.6 |
| 609 | 2019/02/06 17:02:16 | 67.7 |
| 610 | 2019/02/06 17:02:17 | 69.3 |
| 611 | 2019/02/06 17:02:18 | 70.5 |
| 612 | 2019/02/06 17:02:19 | 70.6 |
| 613 | 2019/02/06 17:02:20 | 72.2 |
| 614 | 2019/02/06 17:02:21 | 71.1 |
| 615 | 2019/02/06 17:02:22 | 71.8 |
| 616 | 2019/02/06 17:02:23 | 72.0 |
| 617 | 2019/02/06 17:02:24 | 69.4 |
| 618 | 2019/02/06 17:02:25 | 69.6 |
| 619 | 2019/02/06 17:02:26 | 68.5 |
| 620 | 2019/02/06 17:02:27 | 67.2 |
| 621 | 2019/02/06 17:02:28 | 67.5 |
| 622 | 2019/02/06 17:02:29 | 68.3 |
| 623 | 2019/02/06 17:02:30 | 67.3 |
| 624 | 2019/02/06 17:02:31 | 67.2 |
| 625 | 2019/02/06 17:02:32 | 67.5 |
| 626 | 2019/02/06 17:02:33 | 67.2 |
| 627 | 2019/02/06 17:02:34 | 68.3 |
| 628 | 2019/02/06 17:02:35 | 67.7 |
| 629 | 2019/02/06 17:02:36 | 67.2 |
| 630 | 2019/02/06 17:02:37 | 67.3 |
| 631 | 2019/02/06 17:02:38 | 72.5 |
| 632 | 2019/02/06 17:02:39 | 73.4 |
| 633 | 2019/02/06 17:02:40 | 71.7 |
| 634 | 2019/02/06 17:02:41 | 71.0 |
| 635 | 2019/02/06 17:02:42 | 68.8 |
| 636 | 2019/02/06 17:02:43 | 69.3 |
| 637 | 2019/02/06 17:02:44 | 69.2 |
| 638 | 2019/02/06 17:02:45 | 68.3 |
| 639 | 2019/02/06 17:02:46 | 67.0 |
| 640 | 2019/02/06 17:02:47 | 70.0 |
| 641 | 2019/02/06 17:02:48 | 67.8 |
| 642 | 2019/02/06 17:02:49 | 66.3 |
| 643 | 2019/02/06 17:02:50 | 69.1 |
| 644 | 2019/02/06 17:02:51 | 68.3 |
| 645 | 2019/02/06 17:02:52 | 66.8 |
| 646 | 2019/02/06 17:02:53 | 65.5 |
| 647 | 2019/02/06 17:02:54 | 64.5 |
| 648 | 2019/02/06 17:02:55 | 63.1 |
| 649 | 2019/02/06 17:02:56 | 64.3 |
| 650 | 2019/02/06 17:02:57 | 63.8 |
| 651 | 2019/02/06 17:02:58 | 65.5 |
| 652 | 2019/02/06 17:02:59 | 66.0 |
| 653 | 2019/02/06 17:03:00 | 67.7 |
| 654 | 2019/02/06 17:03:01 | 69.3 |
| 655 | 2019/02/06 17:03:02 | 70.6 |
| 656 | 2019/02/06 17:03:03 | 70.5 |
| 657 | 2019/02/06 17:03:04 | 69.0 |
| 658 | 2019/02/06 17:03:05 | 70.7 |
| 659 | 2019/02/06 17:03:06 | 70.3 |
| 660 | 2019/02/06 17:03:07 | 72.5 |
| 661 | 2019/02/06 17:03:08 | 71.2 |
| 662 | 2019/02/06 17:03:09 | 70.6 |
| 663 | 2019/02/06 17:03:10 | 69.2 |
| 664 | 2019/02/06 17:03:11 | 68.8 |
| 665 | 2019/02/06 17:03:12 | 68.4 |
| 666 | 2019/02/06 17:03:13 | 65.7 |
| 667 | 2019/02/06 17:03:14 | 64.5 |
| 668 | 2019/02/06 17:03:15 | 64.0 |
| 669 | 2019/02/06 17:03:16 | 63.1 |
| 670 | 2019/02/06 17:03:17 | 62.4 |
| 671 | 2019/02/06 17:03:18 | 64.6 |
| 672 | 2019/02/06 17:03:19 | 65.0 |
| 673 | 2019/02/06 17:03:20 | 65.6 |
| 674 | 2019/02/06 17:03:21 | 68.0 |
| 675 | 2019/02/06 17:03:22 | 68.1 |
| 676 | 2019/02/06 17:03:23 | 69.2 |
| 677 | 2019/02/06 17:03:24 | 67.0 |
| 678 | 2019/02/06 17:03:25 | 67.3 |
| 679 | 2019/02/06 17:03:26 | 69.2 |

| | | |
|---|---|---|
| 680 | 2019/02/06 17:03:27 | 66.6 |
| 681 | 2019/02/06 17:03:28 | 65.4 |
| 682 | 2019/02/06 17:03:29 | 64.9 |
| 683 | 2019/02/06 17:03:30 | 67.2 |
| 684 | 2019/02/06 17:03:31 | 68.3 |
| 685 | 2019/02/06 17:03:32 | 65.4 |
| 686 | 2019/02/06 17:03:33 | 65.5 |
| 687 | 2019/02/06 17:03:34 | 65.9 |
| 688 | 2019/02/06 17:03:35 | 65.1 |
| 689 | 2019/02/06 17:03:36 | 62.2 |
| 690 | 2019/02/06 17:03:37 | 61.2 |
| 691 | 2019/02/06 17:03:38 | 61.3 |
| 692 | 2019/02/06 17:03:39 | 61.1 |
| 693 | 2019/02/06 17:03:40 | 60.9 |
| 694 | 2019/02/06 17:03:41 | 61.4 |
| 695 | 2019/02/06 17:03:42 | 61.0 |
| 696 | 2019/02/06 17:03:43 | 64.2 |
| 697 | 2019/02/06 17:03:44 | 66.2 |
| 698 | 2019/02/06 17:03:45 | 66.6 |
| 699 | 2019/02/06 17:03:46 | 66.5 |
| 700 | 2019/02/06 17:03:47 | 65.2 |
| 701 | 2019/02/06 17:03:48 | 65.0 |
| 702 | 2019/02/06 17:03:49 | 65.9 |
| 703 | 2019/02/06 17:03:50 | 67.9 |
| 704 | 2019/02/06 17:03:51 | 69.1 |
| 705 | 2019/02/06 17:03:52 | 68.3 |
| 706 | 2019/02/06 17:03:53 | 66.3 |
| 707 | 2019/02/06 17:03:54 | 66.0 |
| 708 | 2019/02/06 17:03:55 | 66.4 |
| 709 | 2019/02/06 17:03:56 | 66.7 |
| 710 | 2019/02/06 17:03:57 | 68.4 |
| 711 | 2019/02/06 17:03:58 | 69.9 |
| 712 | 2019/02/06 17:03:59 | 69.4 |
| 713 | 2019/02/06 17:04:00 | 71.0 |
| 714 | 2019/02/06 17:04:01 | 72.3 |
| 715 | 2019/02/06 17:04:02 | 72.1 |
| 716 | 2019/02/06 17:04:03 | 69.8 |
| 717 | 2019/02/06 17:04:04 | 69.0 |
| 718 | 2019/02/06 17:04:05 | 70.6 |
| 719 | 2019/02/06 17:04:06 | 70.0 |
| 720 | 2019/02/06 17:04:07 | 68.9 |
| 721 | 2019/02/06 17:04:08 | 67.6 |
| 722 | 2019/02/06 17:04:09 | 66.9 |
| 723 | 2019/02/06 17:04:10 | 66.7 |
| 724 | 2019/02/06 17:04:11 | 65.7 |
| 725 | 2019/02/06 17:04:12 | 66.3 |
| 726 | 2019/02/06 17:04:13 | 65.0 |
| 727 | 2019/02/06 17:04:14 | 64.1 |
| 728 | 2019/02/06 17:04:15 | 66.3 |
| 729 | 2019/02/06 17:04:16 | 68.4 |
| 730 | 2019/02/06 17:04:17 | 70.1 |
| 731 | 2019/02/06 17:04:18 | 70.0 |
| 732 | 2019/02/06 17:04:19 | 70.7 |
| 733 | 2019/02/06 17:04:20 | 72.4 |
| 734 | 2019/02/06 17:04:21 | 71.5 |
| 735 | 2019/02/06 17:04:22 | 70.7 |
| 736 | 2019/02/06 17:04:23 | 70.8 |
| 737 | 2019/02/06 17:04:24 | 68.2 |
| 738 | 2019/02/06 17:04:25 | 69.1 |
| 739 | 2019/02/06 17:04:26 | 70.3 |
| 740 | 2019/02/06 17:04:27 | 68.9 |
| 741 | 2019/02/06 17:04:28 | 70.2 |
| 742 | 2019/02/06 17:04:29 | 69.7 |
| 743 | 2019/02/06 17:04:30 | 70.1 |
| 744 | 2019/02/06 17:04:31 | 70.2 |
| 745 | 2019/02/06 17:04:32 | 69.1 |
| 746 | 2019/02/06 17:04:33 | 70.3 |
| 747 | 2019/02/06 17:04:34 | 70.1 |
| 748 | 2019/02/06 17:04:35 | 71.7 |
| 749 | 2019/02/06 17:04:36 | 69.7 |
| 750 | 2019/02/06 17:04:37 | 69.1 |
| 751 | 2019/02/06 17:04:38 | 71.3 |
| 752 | 2019/02/06 17:04:39 | 73.6 |
| 753 | 2019/02/06 17:04:40 | 73.6 |
| 754 | 2019/02/06 17:04:41 | 76.1 |
| 755 | 2019/02/06 17:04:42 | 74.2 |
| 756 | 2019/02/06 17:04:43 | 73.0 |
| 757 | 2019/02/06 17:04:44 | 72.1 |
| 758 | 2019/02/06 17:04:45 | 72.0 |
| 759 | 2019/02/06 17:04:46 | 71.2 |
| 760 | 2019/02/06 17:04:47 | 69.0 |
| 761 | 2019/02/06 17:04:48 | 69.4 |
| 762 | 2019/02/06 17:04:49 | 71.6 |
| 763 | 2019/02/06 17:04:50 | 71.6 |
| 764 | 2019/02/06 17:04:51 | 70.7 |
| 765 | 2019/02/06 17:04:52 | 70.9 |
| 766 | 2019/02/06 17:04:53 | 72.2 |
| 767 | 2019/02/06 17:04:54 | 72.1 |
| 768 | 2019/02/06 17:04:55 | 72.3 |
| 769 | 2019/02/06 17:04:56 | 73.4 |
| 770 | 2019/02/06 17:04:57 | 74.8 |
| 771 | 2019/02/06 17:04:58 | 74.1 |
| 772 | 2019/02/06 17:04:59 | 73.7 |
| 773 | 2019/02/06 17:05:00 | 73.8 |
| 774 | 2019/02/06 17:05:01 | 72.2 |
| 775 | 2019/02/06 17:05:02 | 72.2 |
| 776 | 2019/02/06 17:05:03 | 72.2 |
| 777 | 2019/02/06 17:05:04 | 72.8 |
| 778 | 2019/02/06 17:05:05 | 72.1 |

| | | |
|---|---|---|
| 779 | 2019/02/06 17:05:06 | 70.4 |
| 780 | 2019/02/06 17:05:07 | 69.8 |
| 781 | 2019/02/06 17:05:08 | 71.9 |
| 782 | 2019/02/06 17:05:09 | 70.1 |
| 783 | 2019/02/06 17:05:10 | 68.7 |
| 784 | 2019/02/06 17:05:11 | 70.2 |
| 785 | 2019/02/06 17:05:12 | 72.2 |
| 786 | 2019/02/06 17:05:13 | 72.3 |
| 787 | 2019/02/06 17:05:14 | 71.2 |
| 788 | 2019/02/06 17:05:15 | 71.2 |
| 789 | 2019/02/06 17:05:16 | 73.4 |
| 790 | 2019/02/06 17:05:17 | 73.1 |
| 791 | 2019/02/06 17:05:18 | 71.1 |
| 792 | 2019/02/06 17:05:19 | 70.9 |
| 793 | 2019/02/06 17:05:20 | 72.2 |
| 794 | 2019/02/06 17:05:21 | 71.9 |
| 795 | 2019/02/06 17:05:22 | 71.4 |
| 796 | 2019/02/06 17:05:23 | 74.5 |
| 797 | 2019/02/06 17:05:24 | 74.3 |
| 798 | 2019/02/06 17:05:25 | 70.5 |
| 799 | 2019/02/06 17:05:26 | 70.3 |
| 800 | 2019/02/06 17:05:27 | 71.6 |
| 801 | 2019/02/06 17:05:28 | 70.6 |
| 802 | 2019/02/06 17:05:29 | 68.4 |
| 803 | 2019/02/06 17:05:30 | 66.9 |
| 804 | 2019/02/06 17:05:31 | 65.5 |
| 805 | 2019/02/06 17:05:32 | 64.5 |
| 806 | 2019/02/06 17:05:33 | 66.4 |
| 807 | 2019/02/06 17:05:34 | 66.8 |
| 808 | 2019/02/06 17:05:35 | 66.1 |
| 809 | 2019/02/06 17:05:36 | 66.3 |
| 810 | 2019/02/06 17:05:37 | 67.2 |
| 811 | 2019/02/06 17:05:38 | 69.9 |
| 812 | 2019/02/06 17:05:39 | 71.0 |
| 813 | 2019/02/06 17:05:40 | 69.7 |
| 814 | 2019/02/06 17:05:41 | 69.1 |
| 815 | 2019/02/06 17:05:42 | 68.7 |
| 816 | 2019/02/06 17:05:43 | 66.8 |
| 817 | 2019/02/06 17:05:44 | 65.2 |
| 818 | 2019/02/06 17:05:45 | 65.3 |
| 819 | 2019/02/06 17:05:46 | 67.2 |
| 820 | 2019/02/06 17:05:47 | 69.8 |
| 821 | 2019/02/06 17:05:48 | 70.1 |
| 822 | 2019/02/06 17:05:49 | 68.4 |
| 823 | 2019/02/06 17:05:50 | 68.2 |
| 824 | 2019/02/06 17:05:51 | 69.0 |
| 825 | 2019/02/06 17:05:52 | 70.0 |
| 826 | 2019/02/06 17:05:53 | 68.9 |
| 827 | 2019/02/06 17:05:54 | 68.9 |
| 828 | 2019/02/06 17:05:55 | 68.8 |
| 829 | 2019/02/06 17:05:56 | 69.3 |
| 830 | 2019/02/06 17:05:57 | 68.0 |
| 831 | 2019/02/06 17:05:58 | 67.9 |
| 832 | 2019/02/06 17:05:59 | 65.1 |
| 833 | 2019/02/06 17:06:00 | 64.6 |
| 834 | 2019/02/06 17:06:01 | 66.2 |
| 835 | 2019/02/06 17:06:02 | 67.0 |
| 836 | 2019/02/06 17:06:03 | 67.5 |
| 837 | 2019/02/06 17:06:04 | 66.8 |
| 838 | 2019/02/06 17:06:05 | 66.1 |
| 839 | 2019/02/06 17:06:06 | 67.1 |
| 840 | 2019/02/06 17:06:07 | 68.7 |
| 841 | 2019/02/06 17:06:08 | 67.0 |
| 842 | 2019/02/06 17:06:09 | 68.6 |
| 843 | 2019/02/06 17:06:10 | 69.3 |
| 844 | 2019/02/06 17:06:11 | 67.5 |
| 845 | 2019/02/06 17:06:12 | 66.3 |
| 846 | 2019/02/06 17:06:13 | 66.5 |
| 847 | 2019/02/06 17:06:14 | 66.4 |
| 848 | 2019/02/06 17:06:15 | 66.9 |
| 849 | 2019/02/06 17:06:16 | 65.5 |
| 850 | 2019/02/06 17:06:17 | 64.5 |
| 851 | 2019/02/06 17:06:18 | 63.7 |
| 852 | 2019/02/06 17:06:19 | 63.9 |
| 853 | 2019/02/06 17:06:20 | 67.3 |
| 854 | 2019/02/06 17:06:21 | 69.3 |
| 855 | 2019/02/06 17:06:22 | 69.2 |
| 856 | 2019/02/06 17:06:23 | 70.3 |
| 857 | 2019/02/06 17:06:24 | 70.6 |
| 858 | 2019/02/06 17:06:25 | 71.7 |
| 859 | 2019/02/06 17:06:26 | 71.2 |
| 860 | 2019/02/06 17:06:27 | 71.1 |
| 861 | 2019/02/06 17:06:28 | 70.6 |
| 862 | 2019/02/06 17:06:29 | 71.3 |
| 863 | 2019/02/06 17:06:30 | 71.6 |
| 864 | 2019/02/06 17:06:31 | 70.3 |
| 865 | 2019/02/06 17:06:32 | 70.3 |
| 866 | 2019/02/06 17:06:33 | 70.1 |
| 867 | 2019/02/06 17:06:34 | 68.6 |
| 868 | 2019/02/06 17:06:35 | 69.6 |
| 869 | 2019/02/06 17:06:36 | 68.3 |
| 870 | 2019/02/06 17:06:37 | 67.9 |
| 871 | 2019/02/06 17:06:38 | 67.6 |
| 872 | 2019/02/06 17:06:39 | 68.4 |
| 873 | 2019/02/06 17:06:40 | 68.2 |
| 874 | 2019/02/06 17:06:41 | 68.2 |
| 875 | 2019/02/06 17:06:42 | 69.4 |
| 876 | 2019/02/06 17:06:43 | 69.6 |
| 877 | 2019/02/06 17:06:44 | 70.6 |

| | | | |
|---|---|---|---|
| 878 | 2019/02/06 | 17:06:45 | 69.8 |
| 879 | 2019/02/06 | 17:06:46 | 70.1 |
| 880 | 2019/02/06 | 17:06:47 | 71.8 |
| 881 | 2019/02/06 | 17:06:48 | 75.8 |
| 882 | 2019/02/06 | 17:06:49 | 75.9 |
| 883 | 2019/02/06 | 17:06:50 | 74.3 |
| 884 | 2019/02/06 | 17:06:51 | 76.3 |
| 885 | 2019/02/06 | 17:06:52 | 74.7 |
| 886 | 2019/02/06 | 17:06:53 | 73.0 |
| 887 | 2019/02/06 | 17:06:54 | 70.4 |
| 888 | 2019/02/06 | 17:06:55 | 70.3 |
| 889 | 2019/02/06 | 17:06:56 | 68.7 |
| 890 | 2019/02/06 | 17:06:57 | 67.4 |
| 891 | 2019/02/06 | 17:06:58 | 68.8 |
| 892 | 2019/02/06 | 17:06:59 | 69.3 |
| 893 | 2019/02/06 | 17:07:00 | 68.5 |
| 894 | 2019/02/06 | 17:07:01 | 67.8 |
| 895 | 2019/02/06 | 17:07:02 | 68.5 |
| 896 | 2019/02/06 | 17:07:03 | 72.2 |
| 897 | 2019/02/06 | 17:07:04 | 71.4 |
| 898 | 2019/02/06 | 17:07:05 | 72.4 |
| 899 | 2019/02/06 | 17:07:06 | 72.6 |
| 900 | 2019/02/06 | 17:07:07 | 73.6 |

# Appendix B

Roadway Construction Noise Model Results

Roadway Construction Noise Model (RCNM),Version 1.1

Report dat 3/8/2019
Case Descr Yucaipa Point Project Reference Noise Level

---- Receptor #1 ----

| Description | Land Use | Baselines (dBA) Daytime | Evening | Night |
|---|---|---|---|---|
| Residences | Residential | 65 | 55 | 45 |

Equipment

| Description | Impact Device | Usage(%) | Spec Lmax (dBA) | Actual Lmax (dBA) | Receptor Distance (feet) | Estimated Shielding (dBA) |
|---|---|---|---|---|---|---|
| Dozer | No | 40 | | 81.7 | 50 | 0 |
| Excavator | No | 40 | | 80.7 | 50 | 0 |
| Front End Loader | No | 40 | | 79.1 | 50 | 0 |
| Generator | No | 50 | | 80.6 | 50 | 0 |
| Backhoe | No | 40 | | 77.6 | 50 | 0 |

Results

| Equipment | Calculated (dBA) *Lmax | Leq | Noise Limits (dBA) Day Lmax | Leq | Evening Lmax | Leq |
|---|---|---|---|---|---|---|
| Dozer | 81.7 | 77.7 | N/A | N/A | N/A | N/A |
| Excavator | 80.7 | 76.7 | N/A | N/A | N/A | N/A |
| Front End Loader | 79.1 | 75.1 | N/A | N/A | N/A | N/A |
| Generator | 80.6 | 77.6 | N/A | N/A | N/A | N/A |
| Backhoe | 77.6 | 73.6 | N/A | N/A | N/A | N/A |
| Total | 81.7 | 83.4 | N/A | N/A | N/A | N/A |

*Calculated Lmax is the Loudest value.

---- Receptor #2 ----

| Description | Land Use | Baselines (dBA) Daytime | Evening | Night |
|---|---|---|---|---|
| Residences | Residential | 65 | 55 | 45 |

Equipment

| Description | Impact Device | Usage(%) | Spec Lmax (dBA) | Actual Lmax (dBA) | Receptor Distance (feet) | Estimated Shielding (dBA) |
|---|---|---|---|---|---|---|
| Dozer | No | 40 | | 81.7 | 50 | 0 |
| Excavator | No | 40 | | 80.7 | 50 | 0 |
| Front End Loader | No | 40 | | 79.1 | 50 | 0 |
| Generator | No | 50 | | 80.6 | 50 | 0 |
| Backhoe | No | 40 | | 77.6 | 50 | 0 |

| | | | Results | | | |
|---|---|---|---|---|---|---|
| | Calculated (dBA) | | Noise Limits (dBA) | | | |
| | | | Day | | Evening | |
| Equipment | *Lmax | Leq | Lmax | Leq | Lmax | Leq |
| Dozer | 81.7 | 77.7 | N/A | N/A | N/A | N/A |
| Excavator | 80.7 | 76.7 | N/A | N/A | N/A | N/A |
| Front End Loader | 79.1 | 75.1 | N/A | N/A | N/A | N/A |
| Generator | 80.6 | 77.6 | N/A | N/A | N/A | N/A |
| Backhoe | 77.6 | 73.6 | N/A | N/A | N/A | N/A |
| Total | 81.7 | 83.4 | N/A | N/A | N/A | N/A |

*Calculated Lmax is the Loudest value.

---- Receptor #3 ----

| | | Baselines (dBA) | | |
|---|---|---|---|---|
| Descriptior | Land Use | Daytime | Evening | Night |
| Church sou | Residential | 65 | 55 | 45 |

| | | | Equipment | | | |
|---|---|---|---|---|---|---|
| | | | Spec | Actual | Receptor | Estimated |
| | Impact | | Lmax | Lmax | Distance | Shielding |
| Description | Device | Usage(%) | (dBA) | (dBA) | (feet) | (dBA) |
| Dozer | No | 40 | | 81.7 | 50 | 0 |
| Excavator | No | 40 | | 80.7 | 50 | 0 |
| Front End Loader | No | 40 | | 79.1 | 50 | 0 |
| Generator | No | 50 | | 80.6 | 50 | 0 |
| Backhoe | No | 40 | | 77.6 | 50 | 0 |

| | | | Results | | | |
|---|---|---|---|---|---|---|
| | Calculated (dBA) | | Noise Limits (dBA) | | | |
| | | | Day | | Evening | |
| Equipment | *Lmax | Leq | Lmax | Leq | Lmax | Leq |
| Dozer | 81.7 | 77.7 | N/A | N/A | N/A | N/A |
| Excavator | 80.7 | 76.7 | N/A | N/A | N/A | N/A |
| Front End Loader | 79.1 | 75.1 | N/A | N/A | N/A | N/A |
| Generator | 80.6 | 77.6 | N/A | N/A | N/A | N/A |
| Backhoe | 77.6 | 73.6 | N/A | N/A | N/A | N/A |
| Total | 81.7 | 83.4 | N/A | N/A | N/A | N/A |

*Calculated Lmax is the Loudest value.

Roadway Construction Noise Model (RCNM),Version 1.1

Report dat 3/8/2019
Case Descr Yucaipa Point Project

---- Receptor #1 ----

| Descriptior | Land Use | Baselines (dBA) Daytime | Evening | Night |
|---|---|---|---|---|
| Residences | Residential | 65 | 55 | 45 |

Equipment

| Description | Impact Device | Usage(%) | Spec Lmax (dBA) | Actual Lmax (dBA) | Receptor Distance (feet) | Estimated Shielding (dBA) |
|---|---|---|---|---|---|---|
| Dozer | No | 40 | | 81.7 | 100 | 0 |
| Excavator | No | 40 | | 80.7 | 100 | 0 |
| Front End Loader | No | 40 | | 79.1 | 100 | 0 |
| Generator | No | 50 | | 80.6 | 100 | 0 |
| Backhoe | No | 40 | | 77.6 | 100 | 0 |

Results

| | Calculated (dBA) | | Noise Limits (dBA) | | | | |
|---|---|---|---|---|---|---|---|
| | | | Day | | Evening | | Night |
| Equipment | *Lmax | Leq | Lmax | Leq | Lmax | Leq | Lmax |
| Dozer | 75.6 | 71.7 | N/A | N/A | N/A | N/A | N/A |
| Excavator | 74.7 | 70.7 | N/A | N/A | N/A | N/A | N/A |
| Front End Loader | 73.1 | 69.1 | N/A | N/A | N/A | N/A | N/A |
| Generator | 74.6 | 71.6 | N/A | N/A | N/A | N/A | N/A |
| Backhoe | 71.5 | 67.6 | N/A | N/A | N/A | N/A | N/A |
| Total | 75.6 | 77.4 | N/A | N/A | N/A | N/A | N/A |

*Calculated Lmax is the Loudest value.

---- Receptor #2 ----

| Descriptior | Land Use | Baselines (dBA) Daytime | Evening | Night |
|---|---|---|---|---|
| Residences | Residential | 65 | 55 | 45 |

Equipment

| Description | Impact Device | Usage(%) | Spec Lmax (dBA) | Actual Lmax (dBA) | Receptor Distance (feet) | Estimated Shielding (dBA) |
|---|---|---|---|---|---|---|
| Dozer | No | 40 | | 81.7 | 800 | 0 |
| Excavator | No | 40 | | 80.7 | 800 | 0 |
| Front End Loader | No | 40 | | 79.1 | 800 | 0 |
| Generator | No | 50 | | 80.6 | 800 | 0 |
| Backhoe | No | 40 | | 77.6 | 800 | 0 |

| | | | Results | | | | |
|---|---|---|---|---|---|---|---|
| | Calculated (dBA) | | | Noise Limits (dBA) | | | |
| | | | Day | | Evening | | Night |
| Equipment | *Lmax | Leq | Lmax | Leq | Lmax | Leq | Lmax |
| Dozer | 57.6 | 53.6 | N/A | N/A | N/A | N/A | N/A |
| Excavator | 56.6 | 52.6 | N/A | N/A | N/A | N/A | N/A |
| Front End Loader | 55 | 51 | N/A | N/A | N/A | N/A | N/A |
| Generator | 56.5 | 53.5 | N/A | N/A | N/A | N/A | N/A |
| Backhoe | 53.5 | 49.5 | N/A | N/A | N/A | N/A | N/A |
| Total | 57.6 | 59.3 | N/A | N/A | N/A | N/A | N/A |

*Calculated Lmax is the Loudest value.

---- Receptor #3 ----

| | | Baselines (dBA) | | |
|---|---|---|---|---|
| Descriptior | Land Use | Daytime | Evening | Night |
| Church sou | Residential | 65 | 55 | 45 |

| | | | Equipment | | | |
|---|---|---|---|---|---|---|
| | | | Spec | Actual | Receptor | Estimated |
| | Impact | | Lmax | Lmax | Distance | Shielding |
| Description | Device | Usage(%) | (dBA) | (dBA) | (feet) | (dBA) |
| Dozer | No | 40 | | 81.7 | 700 | 0 |
| Excavator | No | 40 | | 80.7 | 700 | 0 |
| Front End Loader | No | 40 | | 79.1 | 700 | 0 |
| Generator | No | 50 | | 80.6 | 700 | 0 |
| Backhoe | No | 40 | | 77.6 | 700 | 0 |

| | | | Results | | | | |
|---|---|---|---|---|---|---|---|
| | Calculated (dBA) | | | Noise Limits (dBA) | | | |
| | | | Day | | Evening | | Night |
| Equipment | *Lmax | Leq | Lmax | Leq | Lmax | Leq | Lmax |
| Dozer | 58.7 | 54.8 | N/A | N/A | N/A | N/A | N/A |
| Excavator | 57.8 | 53.8 | N/A | N/A | N/A | N/A | N/A |
| Front End Loader | 56.2 | 52.2 | N/A | N/A | N/A | N/A | N/A |
| Generator | 57.7 | 54.7 | N/A | N/A | N/A | N/A | N/A |
| Backhoe | 54.6 | 50.7 | N/A | N/A | N/A | N/A | N/A |
| Total | 58.7 | 60.5 | N/A | N/A | N/A | N/A | N/A |

*Calculated Lmax is the Loudest value.

# Appendix C

Car Wash and HVAC Noise Specifications

# 38AUZ/D 50 Hz
# Commercial Split Systems
# Air Conditioning Condensing Units
# 18.3 kW to 59.2 kW

Carrier
turn to the experts

# Product Data

Gemini

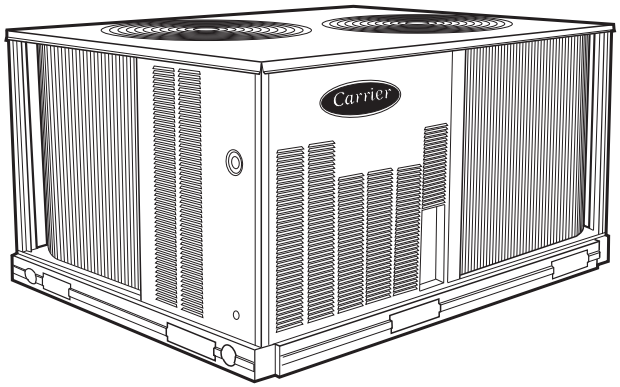


C09227

**38AUZ07-08 shown**

Certified to ISO 9001

Carrier's air-cooled air conditioning split systems:

- provide a logical solution for commercial needs
- have a rugged, dependable construction
- are available in single and circuit scroll compressor capacity control
- have cooling capability up to 52°C (125°F) ambient and down to 2°C (35°F) ambient standard

## FEATURES/BENEFITS

These dependable outdoor air cooled condensing units match Carrier's indoor-air handlers to meet a wide selection of cooling solutions.

**Constructed for long life**

The 38AUZ single circuit and 38AUD dual circuit, scroll compressor models are designed and built to last. The high efficient designed outdoor coil construction allows for a more efficient design in a smaller cabinet size that utilizes an overall reduction in refrigerant charge. Where conditions require, special coil coating coil protection option is available. Cabinets are constructed of prepainted galvanized steel, delivering unparalleled protection from the environment. Inside and outside surfaces are protected to ensure long life, good looks, and reliable operation. Safety controls are used for enhanced system protection and reliability.

Each unit utilizes the Comfort Alert diagnostic and troubleshoot control system. This protects the units operation and provides valuable diagnostic information when required.

### Factory-installed options (FIOPs)

Certified and pre-engineered factory-installed options (FIOPs) allow units to be installed in less time, thereby reducing installed cost. FIOPs include:

- low ambient controls which provide cooling operation down to -29°C (-20°F) ambient temperatures
- non-fused disconnect
- special coil coating coil protection
- louvered hail guard

## Efficient operation

These air cooled condensing units will provide EER's up to 12.6 (tested in accordance with ASHRAE 90.1 standards).

This high efficiency will help reduce overall operating cost and energy consumption.

## Controls for performance dependability

The 38AU condensing units offer operating controls and components designed for performance dependability. The high efficiency hermetic scroll compressor is engineered for long life and durability. The compressors include vibration isolation for quiet operation. The high-pressure switch protects the entire refrigeration system from abnormally high operating pressures. A low-pressure switch protects the system from loss of charge. These units also include anti-short-cycling protection, which helps to protect the units against compressor failure.

All units include a crankcase heater to eliminate liquid slugging at start-up. Each unit comes standard with the Comfort Alert™ control system. This provides:

- System Go LED indicator
- Fault LED indicator
- Compressor fault LED indicator
- Phase loss protection
- Phase reversal protection
- Safety pressure indicator
- Anti-short cycle protection

## Innovative Carrier 40RU packaged air handlers are custom matched to 38AUZ/D condensing units

Information on matching 40RU DX packaged air handler follows for convenience. See separate product data for more details. The 40RU Series has excellent fan performance, efficient direct-expansion (DX) coils, a unique combination of indoor-air quality features, and is easy to install. Its versatility and state-of-the-art features help to ensure economical performance of the split system both now and in the future.

## Indoor-air quality (IAQ) features

The unique combination of IAQ features in the 40RU Series air handlers help to ensure that only clean, fresh, conditioned air is delivered to the occupied space.

Direct-expansion (DX) 4 row cooling coils prevent the build-up of humidity in the room, even during part-load conditions.

Standard 2-in. (51mm) disposable filters remove dust and airborne particles from the occupied space for cleaner air.

The pitched, non-corroding drain pan can be adjusted for a right-hand or left-hand connection to suit many applications and provide positive drainage and prevent standing condensate.

The accessory economizer can provide ventilation air to improve indoor-air quality by using demand control ventilation. When used in conjunction with Carrier Comfort System and $CO_2$ sensors, the economizer admits fresh outdoor air to replace stale, recirculated indoor air.

## Economy

The 40RU Series packaged air handlers provide reduced installation expense and energy-efficient performance.

Quick installation is ensured by the multipoise design. Units can be installed in either the horizontal or vertical configuration without modifications. Fan motors and contactors are pre-wired and thermostatic expansion valves (TXVs) are factory-installed on all 40RU models.

High efficiency, precision-balanced fans minimize air turbulence, surging, and unbalanced operation, cutting operation expenses.

The economizer accessory precisely controls the blend of outdoor air and room air to achieve comfort levels. When the outside air enthalpy is suitable, outside air dampers can fully open to provide "free" cooling without energizing mechanical cooling.

## Rugged dependability

The 40RU series units are made to last. The die-formed galvanized steel panels ensure structural integrity under all operating conditions. Galvanized steel fan housings are securely mounted to a die-formed galvanized steel fan deck.

Rugged pillow-block bearings (40RU14) are securely fastened to the solid steel fan shaft with split collets and clamp locking devices. Smaller unit sizes have spider-type bearings.

## Coil flexibility

Model 40RU direct- expansion coils have galvanized steel casings; inlet and outlet connections are on the same end. The coils are designed for use with Puron (R-410A) refrigerant and have $^3/_8$-in. diameter copper tubes mechanically bonded to aluminum sine-wave fins. The coils include matched, factory-installed thermostatic expansion valves (TXVs) with matching distributor nozzles and offers a removable power element and extended connections.

## Easier installation and service

The multipoise design and component layout ensures quick unit installation and operation. Units can be converted from horizontal to vertical operation by simply repositioning the unit. Drain pan connections are duplicated on both sides of the unit. The filters, motor, drive, TXVs, and coil connections are all easily accessed by removing a single side panel.

# MODEL NUMBER NOMENCLATURE

| 1 | 2 | 3 | 4 | 5 | 6 | 7 | 8 | 9 | 10 | 11 | 12 | 13 | 14 | 15 | 16 | 17 | 18 |
|---|---|---|---|---|---|---|---|---|---|---|---|---|---|---|---|---|---|
| 3 | 8 | A | U | Z | A | 0 | 7 | A | 0 | A | 9 | – | 0 | A | 0 | A | 0 |

**Model Type**
Commercial Air Cooled Cond. Unit
Puron® R–410A Refrigerant

**Type of Coil**
D = Dual Circuit
Z = Single Circuit

**Refrigerant Options**
A = Standard
B = Low Ambient Controls

**Nominal Tonnage**
07 = 18.3 kW (5.2 Tons)
08 = 23.2 kW (6.6 Tons)
12 = 29.1 kW (8.3 Tons)
14 = 35.2 kW (10.0 Tons)
16 = 45.8 kW (13.0 Tons)
25 = 59.2 kW (16.8 Tons)

**Factory Assigned**
A = Default

**Factory Assigned**
0 = Default

**Voltage**
9 = 400–3–50

**Design Rev**
– = Factory Assigned

**Base Unit Controls**
0 = Standard Electro–Mechanical Controls

**Factory Assigned**
A = Default

**Service Options**
0 = None

**Electrical Options**
A = None
C = Non–Fused Disconnect

**Brand / Packaging**
0 = Standard
1 = LTL

**Coil Options (Condenser)**
**With Round Tube/Plate Fin Design**
**All models except 14 size (12.5 Ton)**
A = Al/Cu Standard
B = Pre Coat Al/Cu
C = E–Coat Al/Cu
E = Cu/Cu
M = Al/Cu Standard with louvered hail guard
N = Pre Coat Al/Cu with louvered hail guard
P = E–Coat Al/Cu with louvered hail guard
R = Cu/Cu – Louvered hail guard
**Coil Options (Condenser)**
**With All Aluminum – NOVATION Design (07–16 sizes)**
G = Al/Al Standard
K = E–Coat Al/Al
T = Al/Al with louvered hail guard
W = E–Coat Al/Al with louvered hail guard

## AHRI CAPACITY RATINGS

| UNIT | COOLING STAGES | NOM. CAPACITY (TONS) | NET COOLING CAPACITY (MBH) | TOTAL POWER (kW) | EER |
|---|---|---|---|---|---|
| 38AUZ07/40RU07 | 1 | 5 | 62.7 | 5.1 | 12.2 |
| 38AUZ08/40RU08 | 1 | 6.3 | 79.3 | 6.9 | 11.5 |
| 38AUD12/40RU12 | 2 | 8.3 | 103.0 | 8.2 | 12.6 |
| 38AUD14/40RU14 | 2 | 10.4 | 125.0 | 10.9 | 11.5 |
| 38AUD16/40RU16 | 2 | 12.5 | 162.0 | 13.5 | 12.0 |
| 38AUD25/40RU25 | 2 | 16.7 | 202.2 | 16.6 | 12.2 |

**LEGEND**

AHRI – Air Conditioning, Heating and Refrigeration Institute
ASHRAE – American Society of Heating, Refrigerating and Air Conditioning, Inc.
EER – Energy Efficiency Ratio
IEER – Integrated Energy Efficiency Ratio

**NOTES**

1. Rated in accordance with AHRI Standard 340/360, as appropriate.
2. Ratings are based on:
   **Cooling Standard:** 27°C (80°F) db, 19°C (67°F) wb indoor air temp and 35°C (95°F) db outdoor air temp.
3. All units comply with ASHRAE 90.1 Energy Standard for minimum EER and IEER requirements.

38AU

## SOUND POWER LEVELS, dB

| UNIT | COOLING STAGES | OUTDOOR SOUND (dB) | | | | | | | | |
|---|---|---|---|---|---|---|---|---|---|---|
| | | A–WEIGHTED | 63 | 125 | 250 | 500 | 1000 | 2000 | 4000 | 8000 |
| **NOVATION – All Aluminum Coil Design** | | | | | | | | | | |
| 38AUZ07 | 1 | 82 | 78.7 | 91.2 | 84.4 | 79.7 | 76.9 | 73.5 | 71.9 | 67.5 |
| 38AUZ08 | 1 | 81 | 81.7 | 89.7 | 82.6 | 77.6 | 74.4 | 70.3 | 68.0 | 64.2 |
| 38AUD12 | 2 | 78 | 79.2 | 81.1 | 78.4 | 75.0 | 72.9 | 68.2 | 66.4 | 68.2 |
| 38AUD14 | 2 | 79 | 76.2 | 78.6 | 78.1 | 75.1 | 75.2 | 71.4 | 67.9 | 65.1 |
| 38AUD16 | 2 | 80 | 90.3 | 81.8 | 78.0 | 76.7 | 75.2 | 70.5 | 66.4 | 61.9 |
| **RTPF – Round Tube/Plate Fin Coil Design** | | | | | | | | | | |
| 38AUZ07 | 1 | 83 | 81.7 | 88.2 | 84.0 | 79.7 | 78.1 | 74.0 | 71.4 | 68.0 |
| 38AUZ08 | 1 | 83 | 81.7 | 88.2 | 84.0 | 79.7 | 78.1 | 74.0 | 71.4 | 68.0 |
| 38AUD12 | 2 | 80 | 76.0 | 79.9 | 79.8 | 77.4 | 75.6 | 69.8 | 67.8 | 66.4 |
| 38AUD16 | 2 | 83 | 86.7 | 81.2 | 78.9 | 80.4 | 78.0 | 74.2 | 70.2 | 65.0 |
| 38AUD25 | 2 | 85 | 91.0 | 85.0 | 80.0 | 86.0 | 79.0 | 73.0 | 68.0 | 63.0 |

**NOTE**: Outdoor sound data is measure in accordance with AHRI standard 270–2008.
**LEGEND:**
dB = Decibel

# PHYSICAL DATA

| SINGLE CIRCUIT MODELS with RTPF – Round Tube/Plate Fin Coil Design | | |
|---|---|---|
| | **38AUZ07** | **38AUZ08** |
| **Refrigeration System** | | |
| # Circuits / # Comp. / Type | 1 / 1 / Scroll | 1 / 1 / Scroll |
| R–410a shipping charge A/B (lbs, 50 Hz) | 11 | 13 |
| System charge w/ fan coil* (50 Hz) | 14 | 17 |
| Metering device | TXV | TXV |
| High–press. Trip / Reset (psig) | 630 / 505 | 630 / 505 |
| Low–press. Trip / Reset (psig) | 54 / 117 | 54 / 117 |
| **Cond. Coil** | | |
| Material | Al/Cu | Al/Cu |
| Coil type | RTPF | RTPF |
| Rows / FPI | 2 / 17 | 2 / 17 |
| Total face area (ft2) | 17.5 | 17.5 |
| **Cond. fan / motor** | | |
| Qty / Motor drive type | 2 / direct | 2 / direct |
| Motor HP / RPM | 1/4 / 1100 | 1/4 / 1100 |
| Fan diameter (in) | 22 | 22 |
| Nominal Airflow (cfm) | 6000 | 6000 |
| Watts (total) | 610 | 610 |
| **Piping Connections** | | |
| Qty / Suction (in. ODS) | 1 / 1 1/8 | 1 / 1 1/8 |
| Qty / Liquid (in. ODS) | 1 / 3/8 | 1 / 1/2 |

| SINGLE CIRCUIT MODELS with NOVATION – All Aluminum coil Design | | |
|---|---|---|
| | **38AUZ07** | **38AUZ08** |
| **Refrigeration System** | | |
| # Circuits / # Comp. / Type | 1 / 1 / Scroll | 1 / 1 / Scroll |
| R–410a shipping charge A/B (lbs) | 4.4 | 4.9 |
| System charge w/ fan coil | 8.4 | 10.2 |
| System charge w/ fan coil (50hz) | 9.0 | 12.3 |
| Metering device | TXV | TXV |
| High–press. Trip / Reset (psig) | 630 / 505 | 630 / 505 |
| Low–press. Trip / Reset (psig) | 54 / 117 | 54 / 117 |
| **Cond. Coil** | | |
| Material | Al | Al |
| Coil type | microchannel | microchannel |
| Rows / FPI | 1 / 17 | 1 / 17 |
| total face area (ft2) | 17.5 | 20.5 |
| **Cond. fan / motor** | | |
| Qty / Motor drive type | 2 / direct | 2 / direct |
| Motor HP / RPM | 1/4 / 1100 | 1/4 / 1100 |
| Fan diameter (in) | 22 | 22 |
| Nominal Airflow (cfm) | 6,000 | 6,000 |
| Watts (total) | 610 | 610 |

RTPF – Round tube /plate fin design

* Approximate system charge with about 25 ft piping of sizes indicated with matched 40RU.

# PHYSICAL DATA (CONT)

38AU

| DUAL CIRCUIT MODELS with RTPF – Round Tube/Plate Fin Coil Design | | | |
|---|---|---|---|
| | **38AUD12** | **38AUD16** | **38AUD25** |
| **Refrigeration System** | | | |
| # Circuits / # Comp. / Type | 2 / 2 / Scroll | 2 / 2 / Scroll | 2 / 2 / Scroll |
| R–410a shipping charge A/B (lbs, 50 Hz) | 8.0 / 8.0 | 16.0 / 16.0 | 14.0 / 14.0 |
| System charge w/ fan coil* (50 Hz) | 11.0 / 10.0 | 22.0 / 22.0 | 19.0 / 19.0 |
| Metering device | TXV | TXV | TXV |
| High–press. Trip / Reset (psig) | 630 / 505 | 630 / 505 | 630 / 505 |
| Low–press. Trip / Reset (psig) | 54 / 117 | 54 / 117 | 54 / 117 |
| **Compressor** | | | |
| Model | ZP51 (2) | ZP83 (2) | ZP103 (2) |
| Oil Charge A/B (oz) | 42 / 42 | 60 / 60 | 110 / 110 |
| Speed rpm 50 Hz | 2900 | 2900 | 2900 |
| **Cond. Coil** | | | |
| Material | Al/Cu | Al/Cu | Al/Cu |
| Coil type | RTPF | RTPF | RTPF |
| Rows / FPI | 2 / 17 | 2 / 17 | 2 / 17 |
| Total face area (ft2) | 25.1 | 23.5 x 2 | 25.0 x 2 |
| **Cond. fan / motor** | | | |
| Qty / Motor drive type | 2 / direct | 3 / direct | 4 / direct |
| Motor HP / RPM | 1/4 / 1100 | 1/4 / 1100 | 1/4 / 1100 |
| Fan diameter (in) | 22 | 22 | 22 |
| Nominal Airflow (cfm) | 6000 | 9000 | 12000 |
| Watts (total) | 610 | 970 | 1150 |
| **Piping Connections** | | | |
| Qty / Suction (in. ODS) | 2 / 1 1/8 | 2 / 1 3/8 | 2 / 1 3/8 |
| Qty / Liquid (in. ODS) | 2 / 3/8 | 2 / 1/2 | 2 / 1/2 |

| DUAL CIRCUIT MODELS with NOVATION – All Aluminum coil Design | | | |
|---|---|---|---|
| | **38AUD12** | **38AUD14** | **38AUD16** |
| **Refrigeration System** | | | |
| # Circuits / # Comp. / Type | 2/2/Scroll | 2/2/Scroll | 2/2/Scroll |
| R–410a shipping charge A/B (lbs) | 3.0 /3.1 | 3.7/3.9 | 6.1/6.1 |
| System charge w/ fan coil | 7.4 / 7.4 | 10.8 / 10.8 | 12.0/12.0 |
| System charge w/ fan coil (50hz) | 7.5 / 7.5 | 11.2 / 11.2 | 14.0 /14.0 |
| Metering device | TXV | TXV | TXV |
| High–press. Trip / Reset (psig) | 630 / 505 | 630 / 505 | 630 / 505 |
| Low–press. Trip / Reset (psig) | 54 / 117 | 54 / 117 | 54 / 117 |
| **Cond. Coil** | | | |
| Material | Al | Al | Al |
| Coil type | microchannel | microchannel | microchannel |
| Rows / FPI | 1 / 17 | 1 / 17 | 1 / 17 |
| total face area (ft2) | 25.0 | 31.8 | 25.0 x 2 |
| **Cond. fan / motor** | | | |
| Qty / Motor drive type | 2 / direct | 2 / direct | 3 / direct |
| Motor HP / RPM | 1/4 / 1100 | 1/4 / 1100 | 1/4 / 1100 |
| Fan diameter (in) | 22 | 22 | 22 |
| Nominal Airflow (cfm) | 6,000 | 6,000 | 10,000 |
| Watts (total) | 610 | 610 | 970 |

RTPF – Round tube /plate fin design

* Approximate system charge with about 25 ft piping of sizes indicated with matched 40RU.

# DIMENSIONS

| UNIT | STD. UNIT WT. | | CORNER A | | CORNER B | | CORNER C | | CORNER D | | CENTER OF GRAVITY | | | UNIT HEIGHT |
|---|---|---|---|---|---|---|---|---|---|---|---|---|---|---|
| | KG. | LBS. | KG. | LBS. | KG. | LBS. | KG. | LBS. | KG. | LBS. | X | Y | Z | H |
| 38AUZ-07 (MCHX) | 149 | 328 | 58 | 128 | 31 | 68 | 28 | 62 | 32 | 70 | 21 [533.4] | 19 [482.6] | 13 [330.2] | 42-3/8 [1076.0] |
| 38AUZ-08 (MCHX) | 160 | 353 | 63 | 138 | 33 | 72 | 29 | 65 | 35 | 78 | 19 [482.6] | 23 [584.2] | 13 [330.2] | 42-3/8 [1076.0] |
| 38AUD-12 (MCHX) | 226 | 499 | 88 | 193 | 50 | 111 | 38 | 72 | 56 | 123 | 20 [508.0] | 23 [584.2] | 15 [381.0] | 50-3/8 [1279.2] |
| 38AUD-14 (MCHX) | 229 | 505 | 86 | 190 | 40 | 88 | 34 | 76 | 68 | 151 | 20 [508.0] | 24 [609.6] | 15 [381.0] | 50-3/8 [1279.2] |
| 38AUZ-07 (RTPF) | 176 | 389 | 64 | 141 | 44 | 96 | 28 | 62 | 41 | 91 | 18 [457.2] | 24 [609.6] | 21 [533.4] | 42-3/8 [1076.0] |
| 38AUZ-08 (RTPF) | 177 | 391 | 64 | 142 | 44 | 96 | 28 | 62 | 41 | 91 | 18 [457.2] | 24 [609.6] | 21 [533.4] | 42-3/8 [1076.0] |
| 38AUD-12 (RTPF) | 234 | 516 | 84 | 185 | 53 | 117 | 38 | 83 | 59 | 131 | 19 [482.6] | 23 [584.2] | 24 [609.6] | 50-3/8 [1279.2] |

CG CENTER OF GRAVITY

DIRECTION OF AIR FLOW

DIMENSIONS IN [ ] ARE IN MM

| SERVICE VALVE CONNECTIONS | | |
|---|---|---|
| UNIT | SUCTION | LIQUID |
| 38AUZ07 | 1-1/8 [28.6] | 3/8 [9.5] |
| 38AUZ08 | 1-1/8 [28.6] | 1/2 [12.7] |
| 38AUD12 | 1-1/8 [28.6] | 3/8 [9.5] |
| 38AUD14 | 1-3/8 [34.9] | 1/2 [12.7] |

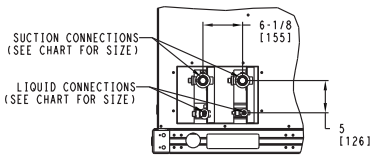


RIGHT SIDE VIEW
(FOR 38AUD SYSTEMS)

38AU

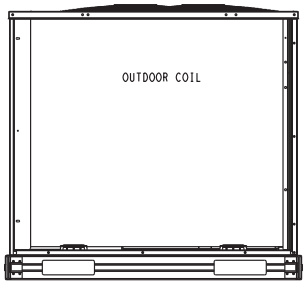


PLAN VIEW

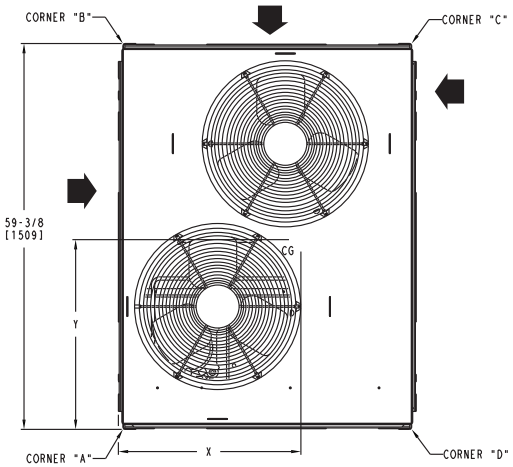


TOP VIEW

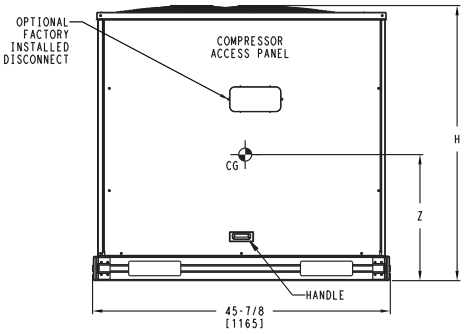


FRONT VIEW

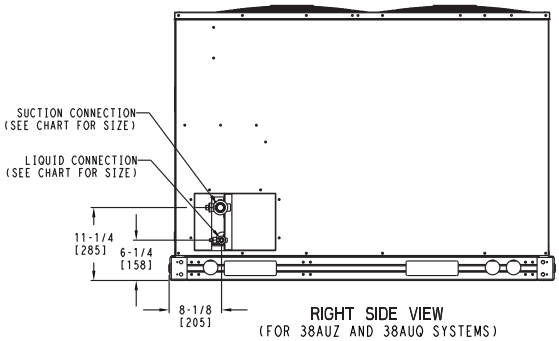


RIGHT SIDE VIEW
(FOR 38AUZ AND 38AUQ SYSTEMS)

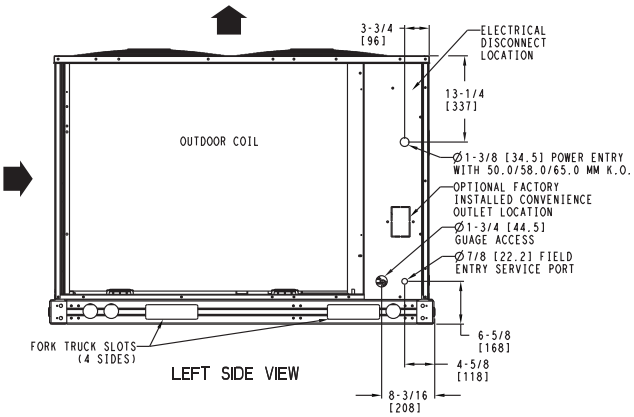


LEFT SIDE VIEW

NOTES:

1. MINIMUM CLEARANCE (LOCAL CODES OR JURISDICTION MAY PREVAIL):
   A. BOTTOM TO COMBUSTIBLE SURFACES: 0 INCHES.
   B. OUTDOOR COIL, FOR PROPER AIR FLOW: 36 INCHES ONE SIDE, 12 INCHES THE OTHER. THE SIDE GETTING THE GREATER CLEARANCE IS OPTIONAL.
   C. OVERHEAD: 60 INCHES, TO ASSURE PROPER OUTDOOR FAN OPERATION.
   D. BETWEEN UNITS: CONTROL BOX SIDE, 42 INCHES PER NEC.
   E. BETWEEN UNIT AND UNGROUNDED SURFACES: CONTROL BOX SIDE, 36 INCHES PER NEC.
   F. BETWEEN UNIT AND BLOCK OR CONCRETE WALLS AND OTHER GROUNDED SURFACES: CONTROL BOX SIDE, 42 INCHES PER NEC.

2. WITH EXCEPTION OF THE CLEARANCE FOR THE OUTDOOR COIL AS STATED IN NOTE 1B, A REMOVABLE FENCE OR BARRICADE REQUIRES NO CLEARANCE.

3. UNITS MAY BE INSTALLED ON COMBUSTIBLE FLOORS MADE FROM WOOD OR CLASS A, B OR C ROOF COVERING MATERIAL.

C10590

# DIMENSIONS (cont.)

| UNIT | STD. UNIT WT. | | CORNER A | | CORNER B | | CORNER C | | CORNER D | | CENTER OF GRAVITY | | | UNIT HEIGHT |
|---|---|---|---|---|---|---|---|---|---|---|---|---|---|---|
| | KG. | LBS. | KG. | LBS. | KG. | LBS. | KG. | LBS. | KG. | LBS. | X | Y | Z | H |
| 38AUD16 (MCHX) | 288 | 633 | 100 | 220 | 61 | 134 | 61.5 | 135 | 65.5 | 144 | 38 [965.2] | 19 [482.6] | 15 [381] | 50-3/8 [1279.2] |
| 38AUD16 (RTPF) | 332 | 731 | 107 | 237 | 78 | 172 | 61 | 135 | 84 | 186 | 38 [965.2] | 19 [482.6] | 17 [431.8] | 50-3/8 [1279.2] |

CG CENTER OF GRAVITY

DIRECTION OF AIR FLOW

DIMENSIONS IN [ ] ARE IN MM

| SERVICE VALVE CONNECTIONS | | | QTY |
|---|---|---|---|
| UNIT | SUCTION | LIQUID | |
| 38AUD16 | 1-3/8 [34.9] | 1/2 [12.7] | 2 EA |

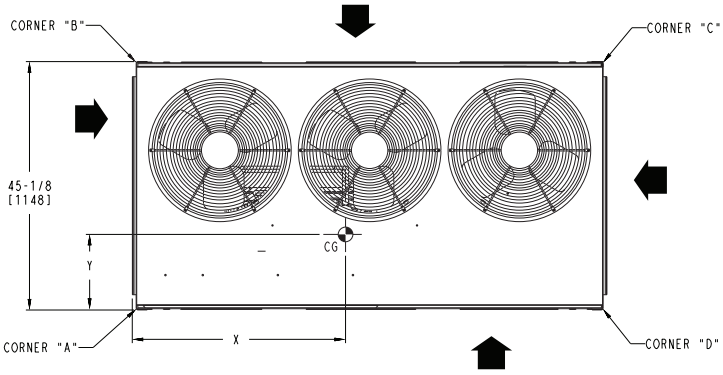


TOP VIEW

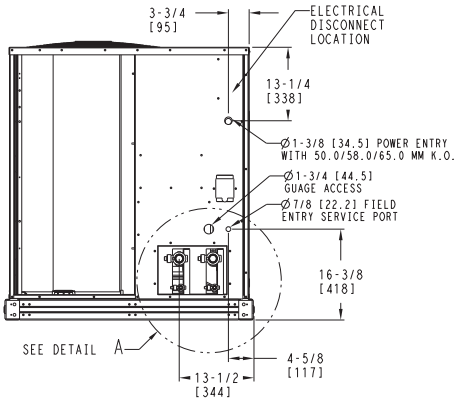


LEFT SIDE VIEW FOR 38AUD SYSTEMS

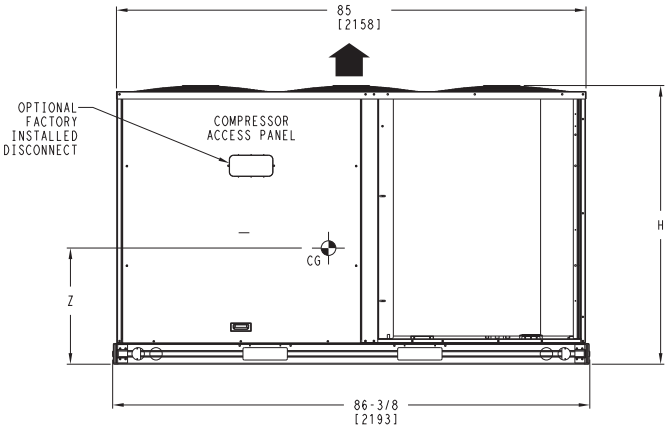


FRONT VIEW

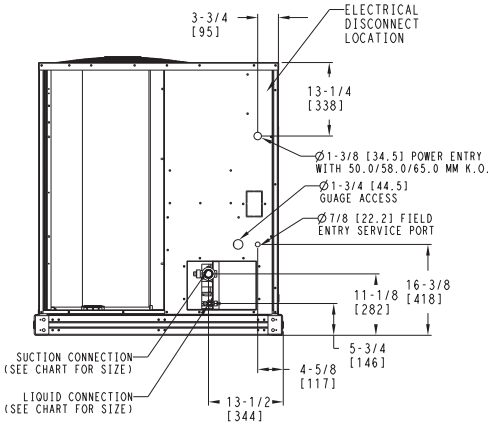


LEFT SIDE VIEW

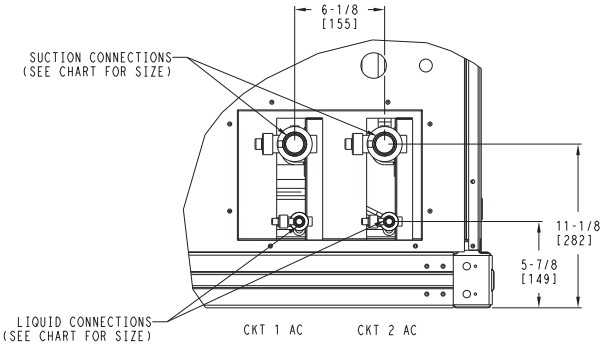


DETAIL A
(NOTE POSITION OF CKT 1)

NOTES:
1. MINIMUM CLEARANCE (LOCAL CODES OR JURISDICTION MAY PREVAIL):
   A. BOTTOM TO COMBUSTIBLE SURFACES: 0 INCHES.
   B. OUTDOOR COIL, FOR PROPER AIR FLOW: 36 INCHES ONE SIDE, 12 INCHES THE OTHER. THE SIDE GETTING THE GREATER CLEARANCE IS OPTIONAL.
   C. OVERHEAD: 60 INCHES, TO ASSURE PROPER OUTDOOR FAN OPERATION.
   D. BETWEEN UNITS: CONTROL BOX SIDE, 42 INCHES PER NEC.
   E. BETWEEN UNIT AND UNGROUNDED SURFACES: CONTROL BOX SIDE, 36 INCHES PER NEC.
   F. BETWEEN UNIT AND BLOCK OR CONCRETE WALLS AND OTHER GROUNDED SURFACES: CONTROL BOX SIDE, 42 INCHES PER NEC.
2. WITH EXCEPTION OF THE CLEARANCE FOR THE OUTDOOR COIL AS STATED IN NOTE 1B, A REMOVABLE FENCE OR BARRICADE REQUIRES NO CLEARANCE.
3. UNITS MAY BE INSTALLED ON COMBUSTIBLE FLOORS MADE FROM WOOD OR CLASS A, B OR C ROOF COVERING MATERIAL.

C10591

# DIMENSIONS (cont.)

| UNIT | STD. UNIT WT. | | CORNER A | | CORNER B | | CORNER C | | CORNER D | | CENTER OF GRAVITY | | | UNIT HEIGHT |
|---|---|---|---|---|---|---|---|---|---|---|---|---|---|---|
| | KG. | LBS. | KG. | LBS. | KG. | LBS. | KG. | LBS. | KG. | LBS. | X | Y | Z | H |
| 38AUD25 (RTPF) | 444 | 978 | 163 | 360 | 85 | 188 | 67 | 147 | 128 | 283 | 38 [965.2] | 23 [584.2] | 17 [431.8] | 50-3/8 [1279.2] |

CG CENTER OF GRAVITY

DIRECTION OF AIR FLOW

DIMENSIONS IN [ ] ARE IN MM

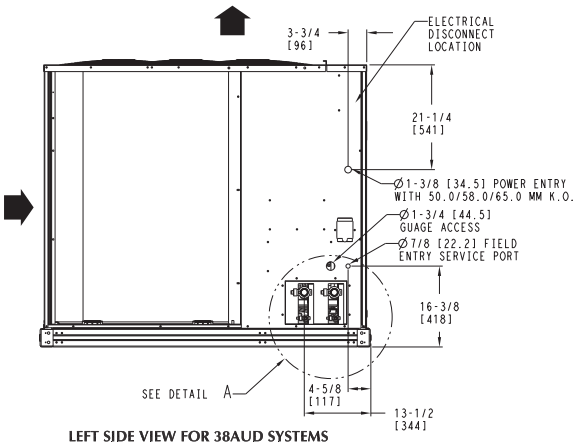


LEFT SIDE VIEW FOR 38AUD SYSTEMS

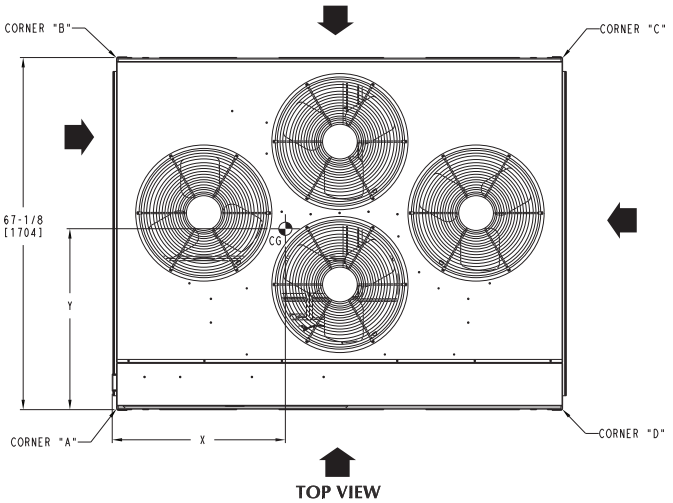


TOP VIEW

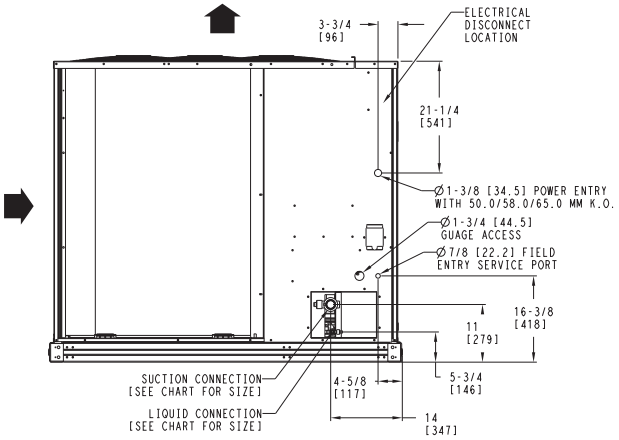


LEFT SIDE VIEW

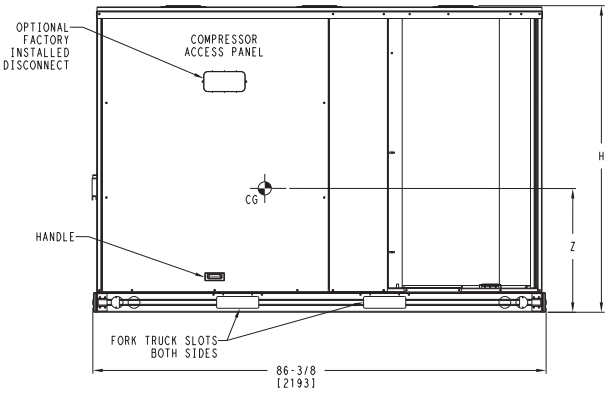


FRONT VIEW

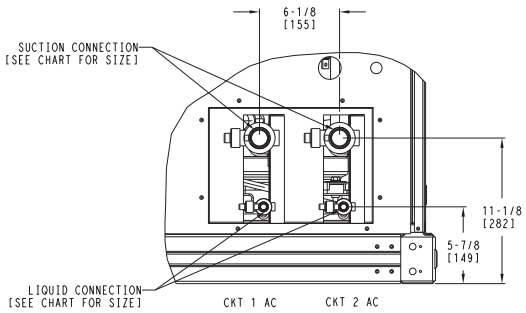


DETAIL A
(NOTE POSITION OF CKT 1)

NOTES:
1. MINIMUM CLEARANCE (LOCAL CODES OR JURISDICTION MAY PREVAIL):
   A. BOTTOM TO COMBUSTIBLE SURFACES: 0 INCHES.
   B. OUTDOOR COIL, FOR PROPER AIR FLOW: 36 INCHES ONE SIDE, 12 INCHES THE OTHER. THE SIDE GETTING THE GREATER CLEARANCE IS OPTIONAL.
   C. OVERHEAD: 60 INCHES, TO ASSURE PROPER OUTDOOR FAN OPERATION.
   D. BETWEEN UNITS: CONTROL BOX SIDE, 42 INCHES PER NEC.
   E. BETWEEN UNIT AND UNGROUNDED SURFACES: CONTROL BOX SIDE, 36 INCHES PER NEC.
   F. BETWEEN UNIT AND BLOCK OR CONCRETE WALLS AND OTHER GROUNDED SURFACES: CONTROL BOX SIDE, 42 INCHES PER NEC.
2. WITH EXCEPTION OF THE CLEARANCE FOR THE OUTDOOR COIL AS STATED IN NOTE 1B, A REMOVABLE FENCE OR BARRICADE REQUIRES NO CLEARANCE.
3. UNITS MAY BE INSTALLED ON COMBUSTIBLE FLOORS MADE FROM WOOD OR CLASS A, B OR C ROOF COVERING MATERIAL.

| SERVICE VALVE CONNECTIONS | | | QTY |
|---|---|---|---|
| UNIT | SUCTION | LIQUID | |
| 38AUD25 | 1-3/8 [34.9] | 1/2 [12.7] | 2 EA |

C10592

38AU

## 38AUZ/D OPTIONS AND ACCESSORIES

| ITEM | OPTION* | ACCESSORY† |
|---|---|---|
| Disconnect Switch (non-fused) | X | |
| Special–coated Coil Protection | X | |
| Low Ambient Temperature MotorMaster I® Control | X | X |
| Wired Condenser Coil Grille (Novation 07–14 models only) | | X |
| Louvered Hail Guard | X | X |
| Programmable Thermostats | | X |

* Factory-installed option.
† Field-installed accessory.

## 38AUZ/38AUD factory-installed options

**E-coated aluminum-fin coils** have a flexible and durable epoxy coating uniformly applied to all coil surfaces. Unlike brittle phenolic dip and bake coatings, E-coating provides superior protection with unmatched flexibility, edge coverage, metal adhesion, thermal performance, and most importantly, corrosion resistance.

**E-coated coils** provide this protection since all coil surfaces are completely encapsulated from environmental contamination. This coating is especially suitable in industrial environments.

**Pre-coated coils** (RTPF coils only) provide protection in mild coastal environments.

**–29°C (–20°F) low-ambient temperature kit option (MotorMaster I®)** controls outdoor-fan motor operation to maintain the correct head pressure at low outdoor ambient temperatures.

**Louvered hail guard package** protects coils against damage from flying debris and hail.

**Non-fused disconnect switch** is used to remove power locally at the condensing unit. This switch also includes a power lockout capability to protect the service person. This lockout switch saves the service person time and effort because there is no need to access a distant disconnect switch while servicing the unit.

**NOTE**: Non-fused disconnect switch cannot be used when unit MOCP electrical rating exceeds 80 amps.

## 38AUZ/D field-installed accessories

**–29°C (–20°F) low-ambient temperature kit accessory (MotorMaster I®)** controls outdoor-fan motor operation to maintain the correct head pressure at low outdoor ambient temperatures.

**Louvered hail guard package** protects coils against damage from flying debris and hail.

**Condenser coil grille** package protects condensing unit coil from impact by large objects and vandalism.

**Carrier's line of thermostats** provide both programmable and non-programmable capability with the new **Debonair®** line of commercial programmable thermostats. The **Commercial Electronic** thermostats provide 7-day programmable capability for economical applications.

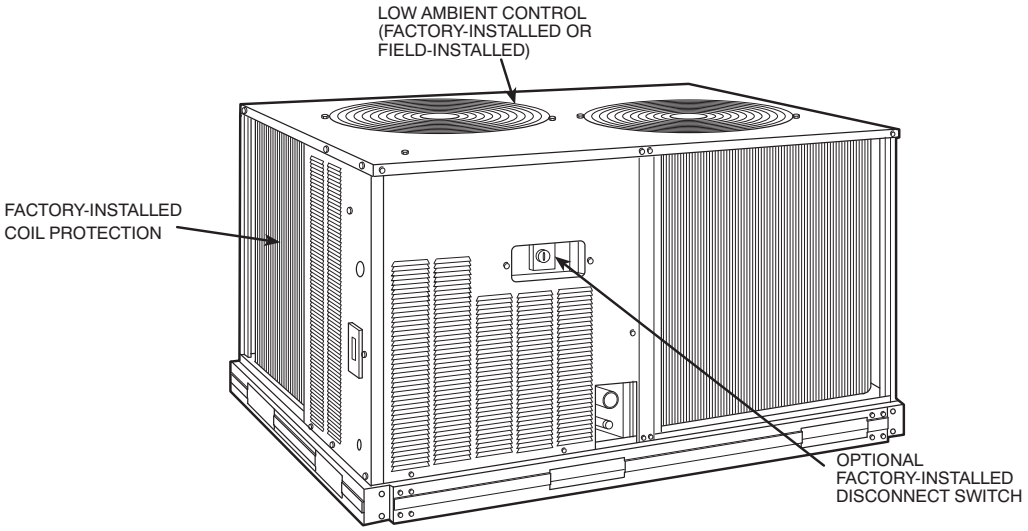


C10609

## 40RU OPTIONS AND ACCESSORIES

| ITEM | OPTION* | ACCESSORY† |
|---|---|---|
| Alternate Fan Motors | X | |
| Alternate Drives | X | |
| $CO_2$ Sensors | | X |
| Condensate Drain Trap | | X |
| Discharge Plenum | | X |
| Economizer | | X |
| Electric Heat | | X |
| Hot Water Heating Coils | | X |
| Overhead Suspension Package | | X |
| Prepainted Units | X | |
| Return Air Grille | | X |
| Steam Heating Coil | | X |
| Subbase | | X |

* Factory-installed option.
† Field-installed accessory.

## 40RU factory-installed options

**Alternate fan motors and drives** are available to provide the widest possible range of performance.

**Units constructed of prepainted steel** are available from the factory for applications that require painted units. Unit color is American Sterling Gray.

## 40RU field-installed accessories

**Two-row hot water coils** have $^5/_8$-in. diameter copper tubes mechanically bonded to aluminum plate fins. Coils have non-ferrous headers.

**One-row steam coil** has 1-in. OD copper tube and aluminum fins. The Inner Distributing Tube (IDT) design provides uniform temperatures across the coil face. The IDT steam coils are especially suited to applications where sub-freezing air enters the unit.

**Electric resistance heat coils** have an open-wire design and are mounted in a rigid frame. Safety cutouts for high temperature conditions are standard.

**Economizer (enthalpy controlled)** provides ventilation air and provides “free” cooling if the outside ambient temperature and humidity are suitable. The economizer can also be used in conjunction with Carrier Comfort System thermostats and $CO_2$ sensors to help meet indoor air quality requirements. The economizer can be used in both vertical and horizontal positions.

**Discharge plenum** directs the air discharge into the occupied space; integral horizontal and vertical louvers enable redirection of airflow. This accessory is available unpainted or painted.

**Return-air grille** provides a protective barrier over the return-air opening and gives a finished appearance to units installed in the occupied space. This accessory is available unpainted or painted.

**Subbase** provides a stable, raised platform and room for condensate drain connection for floor-mounted units. This accessory is available unpainted or painted.

**Overhead suspension package** includes necessary brackets to support units in horizontal installations.

**$CO_2$ sensors** can be used in conjunction with the economizer accessory to help meet indoor air quality requirements. The sensor signals the economizer to open when the $CO_2$ level in the space exceeds the setpoint. A Carrier Comfort System programmable thermostat can also be used to override the sensor if the outside-air temperature is too high or too low.

**Condensate drain trap** includes an overflow shutoff switch that can be wired to turn off the unit if the trap becomes plugged. The kit also includes a wire harness that can be connected to an alarm if desired. The transparent trap is designed for easy service and maintenance.

# OPTIONS AND ACCESSORIES (cont.)

## 40RU WITH DISCHARGE PLENUM RETURN-AIR GRILLE AND SUBBASE

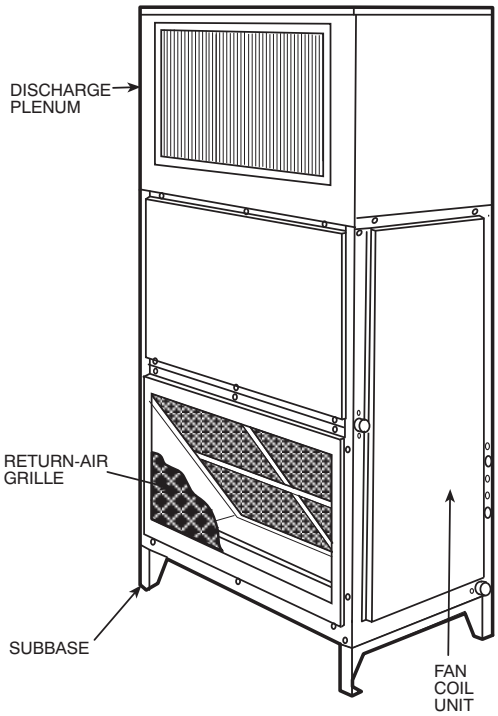


## 40RU WITH HOT WATER OR STEAM COIL

## 40RU WITH ECONOMIZER

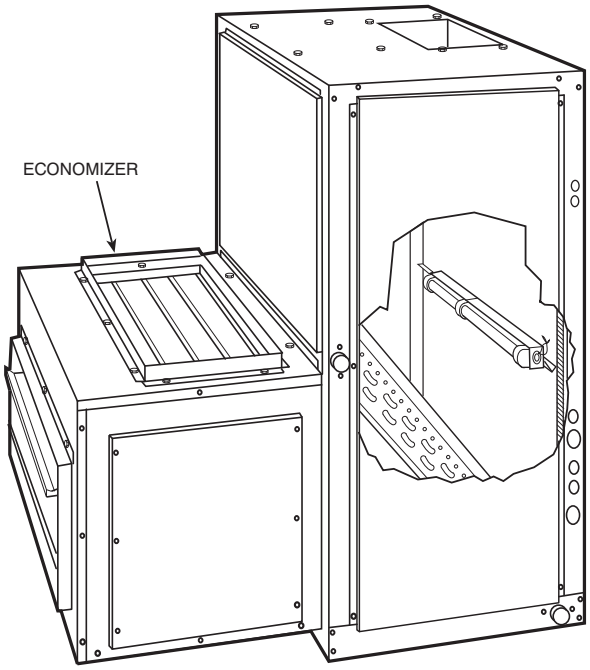


## 40RU WITH CONDENSATE TRAP

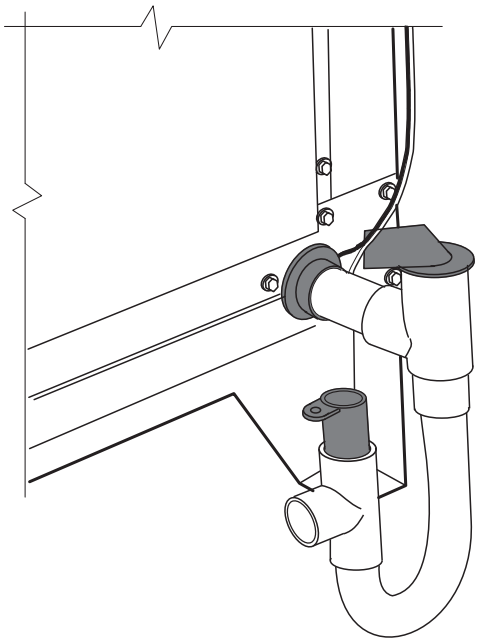

C10610

# TYPICAL WIRING SCHEMATIC

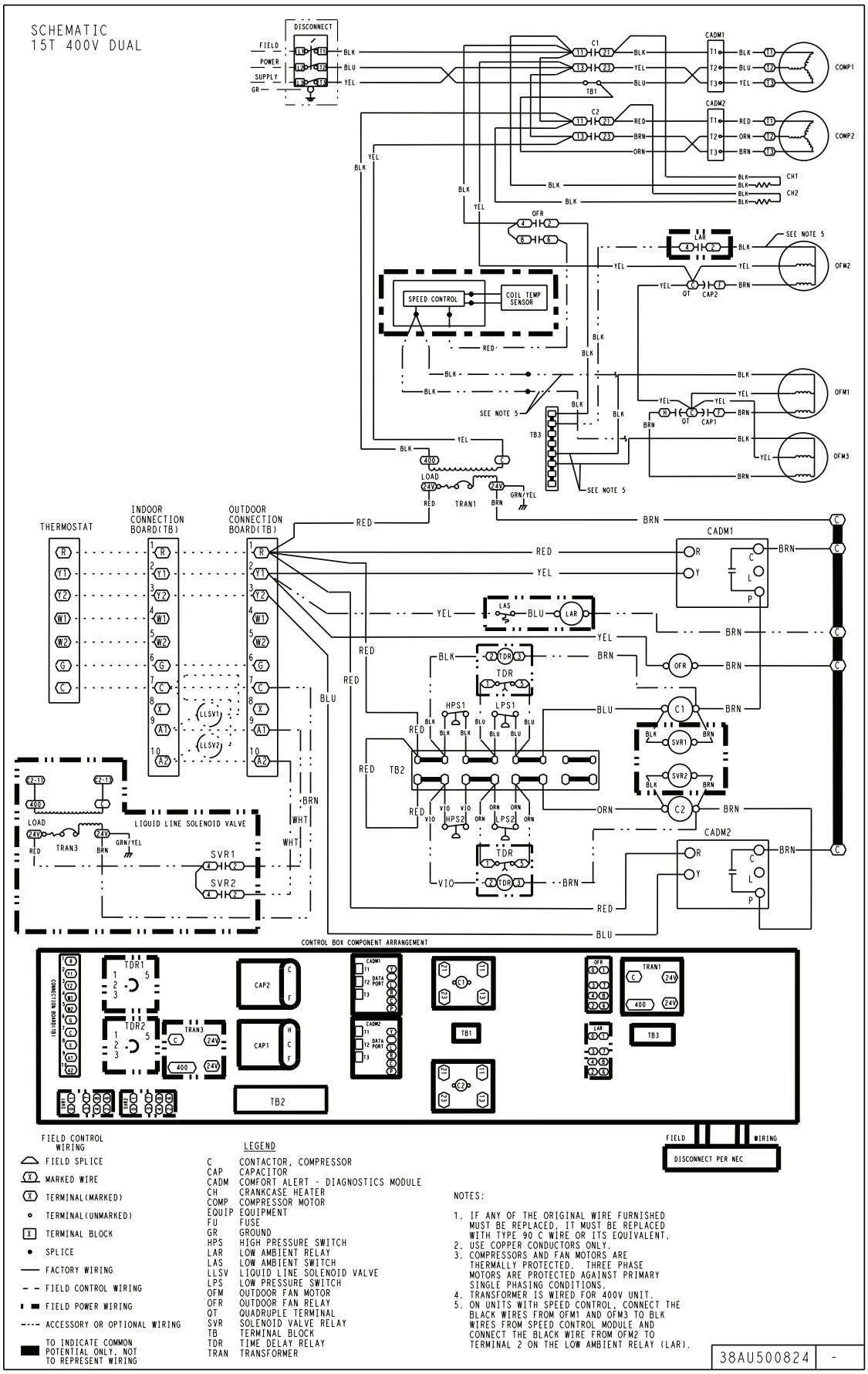


C10593

**Typical 38AUD16 Dual Circuit**

38AU

# PERFORMANCE DATA

38AU

## 38AUZ07 50 Hz — CONDENSER ONLY RATINGS — SI

| SST (°C) | | Air Temperature entering Condenser (°C) | | | | | |
|---|---|---|---|---|---|---|---|
| | | 27 | 29 | 35 | 41 | 46 | 52 |
| -7 | TC | 11.9 | 39.4 | 37.0 | 34.2 | 30.9 | 27.2 |
| | kW | 3.6 | 3.9 | 4.4 | 5.0 | 5.7 | 6.3 |
| | SDT | 35.4 | 38.1 | 44.2 | 49.5 | 54.5 | 59.6 |
| -4 | TC | 13.2 | 39.4 | 37.0 | 34.2 | 30.9 | 27.2 |
| | kW | 3.6 | 3.9 | 4.4 | 5.0 | 5.7 | 6.3 |
| | SDT | 35.9 | 38.7 | 44.2 | 49.5 | 54.3 | 60.0 |
| -1 | TC | 14.6 | 39.4 | 37.0 | 34.2 | 30.9 | 27.2 |
| | kW | 3.6 | 3.9 | 4.4 | 5.0 | 5.7 | 6.3 |
| | SDT | 36.5 | 39.3 | 44.8 | 50.0 | 54.9 | 61.9 |
| 2 | TC | 16.0 | 39.4 | 37.0 | 34.2 | 30.9 | 27.2 |
| | kW | 3.6 | 3.9 | 4.4 | 5.0 | 5.7 | 6.3 |
| | SDT | 37.1 | 39.8 | 45.4 | 50.9 | 56.1 | 61.6 |
| 4 | TC | 17.4 | 39.4 | 37.0 | 34.2 | 30.9 | 27.2 |
| | kW | 3.6 | 3.9 | 4.4 | 5.0 | 5.7 | 6.3 |
| | SDT | 37.7 | 40.4 | 45.9 | 51.5 | 56.9 | 62.2 |
| 7 | TC | 18.9 | 39.4 | 37.0 | 34.2 | 30.9 | 27.2 |
| | kW | 3.6 | 3.9 | 4.4 | 5.0 | 5.7 | 6.3 |
| | SDT | 38.2 | 41.0 | 46.5 | 52.0 | 57.4 | 62.5 |
| 10 | TC | 20.3 | 39.4 | 37.0 | 34.2 | 30.9 | 27.2 |
| | kW | 3.6 | 3.9 | 4.4 | 5.0 | 5.7 | 6.3 |
| | SDT | 38.8 | 41.6 | 47.1 | 52.5 | 57.9 | 63.3 |

## 38AUZ07 50 Hz — CONDENSER ONLY RATINGS — ENGLISH

| SST (°F) | | Air Temperature entering Condenser (°F) | | | | | |
|---|---|---|---|---|---|---|---|
| | | 80 | 85 | 95 | 105 | 115 | 125 |
| 20 | TC | 40.7 | 39.4 | 37.0 | 34.2 | 30.9 | 27.2 |
| | kW | 3.6 | 3.9 | 4.4 | 5.0 | 5.7 | 6.3 |
| | SDT | 95.7 | 100.6 | 111.5 | 121.1 | 130.1 | 139.3 |
| 25 | TC | 45.2 | 43.8 | 41.0 | 38.0 | 34.5 | 31.3 |
| | kW | 3.6 | 3.8 | 4.4 | 5.0 | 5.7 | 6.4 |
| | SDT | 96.7 | 101.6 | 111.6 | 121.1 | 129.8 | 140.1 |
| 30 | TC | 49.8 | 48.4 | 45.5 | 42.2 | 38.6 | 36.0 |
| | kW | 3.5 | 3.8 | 4.4 | 5.0 | 5.7 | 6.6 |
| | SDT | 97.8 | 102.7 | 112.6 | 122.1 | 130.8 | 143.5 |
| 35 | TC | 54.6 | 53.2 | 50.2 | 47.0 | 43.2 | 40.0 |
| | kW | 3.5 | 3.7 | 4.3 | 5.0 | 5.8 | 6.6 |
| | SDT | 98.8 | 103.7 | 113.7 | 123.6 | 132.9 | 142.9 |
| 40 | TC | 59.5 | 58.0 | 54.9 | 51.6 | 48.1 | 44.3 |
| | kW | 3.4 | 3.7 | 4.3 | 5.0 | 5.7 | 6.6 |
| | SDT | 99.8 | 104.7 | 114.7 | 124.6 | 134.5 | 143.9 |
| 45 | TC | 64.4 | 62.9 | 59.7 | 56.4 | 52.8 | 48.6 |
| | kW | 3.3 | 3.6 | 4.2 | 4.9 | 5.7 | 6.5 |
| | SDT | 100.8 | 105.8 | 115.7 | 125.6 | 135.4 | 144.4 |
| 50 | TC | 69.3 | 67.8 | 64.6 | 61.2 | 57.6 | 53.6 |
| | kW | 3.2 | 3.5 | 4.2 | 4.9 | 5.6 | 6.5 |
| | SDT | 101.9 | 106.8 | 116.7 | 126.5 | 136.3 | 145.9 |

**LEGEND:**

kW – Compressor Power
SDT – Saturated Discharge Temperature at Compressor
SST – Saturated Suction Temperature
TC – Gross Cooling Capacity (1000 Btuh)

## 38AUZ08 50 Hz CONDENSER ONLY RATINGS SI

| SST (°C) | | Air Temperature entering Condenser (°C) | | | | | |
|---|---|---|---|---|---|---|---|
| | | 27 | 29 | 35 | 41 | 46 | 52 |
| -7 | TC | 15.3 | 39.4 | 37.0 | 34.2 | 30.9 | 27.2 |
| | kW | 3.6 | 3.9 | 4.4 | 5.0 | 5.7 | 6.3 |
| | SDT | 34.5 | 37.2 | 42.7 | 48.2 | 53.5 | 59.1 |
| -4 | TC | 16.9 | 39.4 | 37.0 | 34.2 | 30.9 | 27.2 |
| | kW | 3.6 | 3.9 | 4.4 | 5.0 | 5.7 | 6.3 |
| | SDT | 35.0 | 37.7 | 43.2 | 48.7 | 53.5 | 58.9 |
| -1 | TC | 18.6 | 39.4 | 37.0 | 34.2 | 30.9 | 27.2 |
| | kW | 3.6 | 3.9 | 4.4 | 5.0 | 5.7 | 6.3 |
| | SDT | 35.6 | 38.3 | 43.7 | 49.2 | 54.6 | 59.5 |
| 2 | TC | 20.3 | 39.4 | 37.0 | 34.2 | 30.9 | 27.2 |
| | kW | 3.6 | 3.9 | 4.4 | 5.0 | 5.7 | 6.3 |
| | SDT | 36.1 | 38.8 | 44.3 | 49.7 | 55.1 | 60.5 |
| 4 | TC | 22.1 | 39.4 | 37.0 | 34.2 | 30.9 | 27.2 |
| | kW | 3.6 | 3.9 | 4.4 | 5.0 | 5.7 | 6.3 |
| | SDT | 36.7 | 39.4 | 44.8 | 50.2 | 55.6 | 60.9 |
| 7 | TC | 23.8 | 39.4 | 37.0 | 34.2 | 30.9 | 27.2 |
| | kW | 3.6 | 3.9 | 4.4 | 5.0 | 5.7 | 6.3 |
| | SDT | 37.3 | 40.0 | 45.4 | 50.7 | 56.1 | 61.4 |
| 10 | TC | 25.6 | 39.4 | 37.0 | 34.2 | 30.9 | 27.2 |
| | kW | 3.6 | 3.9 | 4.4 | 5.0 | 5.7 | 6.3 |
| | SDT | 38.0 | 40.6 | 46.0 | 51.3 | 56.6 | 61.8 |



## 38AUZ08 50 Hz CONDENSER ONLY RATINGS ENGLISH

| SST (°F) | | Air Temperature entering Condenser (°F) | | | | | |
|---|---|---|---|---|---|---|---|
| | | 80 | 85 | 95 | 105 | 115 | 125 |
| 20 | TC | 52.2 | 50.6 | 47.2 | 43.7 | 39.9 | 36.3 |
| | kW | 4.1 | 4.4 | 5.2 | 6.0 | 6.8 | 7.8 |
| | SDT | 94.1 | 99.0 | 108.9 | 118.8 | 128.2 | 138.4 |
| 25 | TC | 57.7 | 55.9 | 52.3 | 48.6 | 44.0 | 40.1 |
| | kW | 4.1 | 4.5 | 5.2 | 6.0 | 6.9 | 7.9 |
| | SDT | 95.0 | 99.9 | 109.8 | 119.7 | 128.3 | 138.1 |
| 30 | TC | 63.4 | 61.5 | 57.7 | 53.8 | 49.6 | 44.7 |
| | kW | 4.2 | 4.5 | 5.3 | 6.1 | 7.0 | 8.0 |
| | SDT | 96.0 | 100.9 | 110.7 | 120.6 | 130.3 | 139.1 |
| 35 | TC | 69.3 | 67.3 | 63.3 | 59.2 | 54.9 | 50.4 |
| | kW | 4.2 | 4.6 | 5.3 | 6.2 | 7.1 | 8.0 |
| | SDT | 97.0 | 101.9 | 111.7 | 121.5 | 131.3 | 140.9 |
| 40 | TC | 75.2 | 73.3 | 69.2 | 64.9 | 60.4 | 55.6 |
| | kW | 4.3 | 4.6 | 5.4 | 6.2 | 7.1 | 8.1 |
| | SDT | 98.1 | 102.9 | 112.7 | 122.4 | 132.1 | 141.7 |
| 45 | TC | 81.3 | 79.3 | 75.2 | 70.7 | 66.0 | 61.0 |
| | kW | 4.3 | 4.6 | 5.4 | 6.2 | 7.2 | 8.2 |
| | SDT | 99.2 | 104.0 | 113.7 | 123.3 | 132.9 | 142.5 |
| 50 | TC | 87.4 | 85.4 | 81.1 | 76.6 | 71.7 | 66.5 |
| | kW | 4.3 | 4.7 | 5.5 | 6.3 | 7.2 | 8.2 |
| | SDT | 100.3 | 105.1 | 114.7 | 124.3 | 133.8 | 143.3 |

**LEGEND:**

kW – Compressor Power
SDT – Saturated Discharge Temperature at Compressor
SST – Saturated Suction Temperature
TC – Gross Cooling Capacity (1000 Btuh)

# PERFORMANCE DATA (cont.)

## 38AUD12 Total Unit 50 Hz CONDENSER ONLY RATINGS SI

| SST (°C) | | Air Temperature entering Condenser (°C) | | | | | |
|---|---|---|---|---|---|---|---|
| | | 27 | 29 | 35 | 41 | 46 | 52 |
| -7 | TC | 19.5 | 39.4 | 37.0 | 34.2 | 30.9 | 27.2 |
| | kW | 3.6 | 3.9 | 4.4 | 5.0 | 5.7 | 6.3 |
| | SDT | 35.5 | 38.0 | 43.1 | 48.2 | 53.2 | 58.2 |
| -4 | TC | 21.5 | 39.4 | 37.0 | 34.2 | 30.9 | 27.2 |
| | kW | 3.6 | 3.9 | 4.4 | 5.0 | 5.7 | 6.3 |
| | SDT | 36.2 | 38.7 | 43.8 | 48.8 | 53.8 | 58.7 |
| -1 | TC | 23.7 | 39.4 | 37.0 | 34.2 | 30.9 | 27.2 |
| | kW | 3.6 | 3.9 | 4.4 | 5.0 | 5.7 | 6.3 |
| | SDT | 36.9 | 39.5 | 44.5 | 49.5 | 54.4 | 59.2 |
| 2 | TC | 26.0 | 39.4 | 37.0 | 34.2 | 30.9 | 27.2 |
| | kW | 3.6 | 3.9 | 4.4 | 5.0 | 5.7 | 6.3 |
| | SDT | 37.7 | 40.2 | 45.2 | 50.1 | 55.0 | 59.8 |
| 4 | TC | 28.4 | 39.4 | 37.0 | 34.2 | 30.9 | 27.2 |
| | kW | 3.6 | 3.9 | 4.4 | 5.0 | 5.7 | 6.3 |
| | SDT | 38.5 | 40.9 | 45.9 | 50.8 | 55.6 | 60.3 |
| 7 | TC | 30.9 | 39.4 | 37.0 | 34.2 | 30.9 | 27.2 |
| | kW | 3.6 | 3.9 | 4.4 | 5.0 | 5.7 | 6.3 |
| | SDT | 39.2 | 41.7 | 46.6 | 51.5 | 56.2 | 60.9 |
| 10 | TC | 33.6 | 39.4 | 37.0 | 34.2 | 30.9 | 27.2 |
| | kW | 3.6 | 3.9 | 4.4 | 5.0 | 5.7 | 6.3 |
| | SDT | 40.1 | 42.5 | 47.3 | 52.2 | 56.9 | 61.4 |

## 38AUD12 Total Unit 50 Hz CONDENSER ONLY RATINGS ENGLISH

| SST (°F) | | Air Temperature entering Condenser (°F) | | | | | |
|---|---|---|---|---|---|---|---|
| | | 80 | 85 | 95 | 105 | 115 | 125 |
| 20 | TC | 66.5 | 64.3 | 59.8 | 55.1 | 50.0 | 44.7 |
| | kW | 5.2 | 5.6 | 6.4 | 7.3 | 8.2 | 9.1 |
| | SDT | 95.9 | 100.5 | 109.6 | 118.8 | 127.8 | 136.7 |
| 25 | TC | 73.4 | 71.0 | 66.1 | 61.0 | 55.7 | 50.0 |
| | kW | 5.2 | 5.6 | 6.5 | 7.4 | 8.3 | 9.2 |
| | SDT | 97.2 | 101.7 | 110.8 | 119.9 | 128.9 | 137.7 |
| 30 | TC | 80.8 | 78.2 | 72.9 | 67.3 | 61.6 | 55.5 |
| | kW | 5.3 | 5.7 | 6.6 | 7.5 | 8.4 | 9.3 |
| | SDT | 98.5 | 103.0 | 112.1 | 121.1 | 129.9 | 138.6 |
| 35 | TC | 88.6 | 85.8 | 80.0 | 74.0 | 67.9 | 61.4 |
| | kW | 5.4 | 5.8 | 6.6 | 7.5 | 8.5 | 9.4 |
| | SDT | 99.8 | 104.3 | 113.3 | 122.3 | 131.1 | 139.6 |
| 40 | TC | 96.8 | 93.8 | 87.5 | 81.2 | 74.5 | 67.4 |
| | kW | 5.5 | 5.9 | 6.7 | 7.6 | 8.6 | 9.5 |
| | SDT | 101.2 | 105.7 | 114.6 | 123.4 | 132.2 | 140.6 |
| 45 | TC | 105.6 | 102.2 | 95.4 | 88.5 | 81.2 | 73.6 |
| | kW | 5.6 | 5.9 | 6.8 | 7.7 | 8.7 | 9.6 |
| | SDT | 102.6 | 107.0 | 115.9 | 124.6 | 133.2 | 141.6 |
| 50 | TC | 114.7 | 111.0 | 103.6 | 96.0 | 88.0 | 79.6 |
| | kW | 5.6 | 6.0 | 6.9 | 7.8 | 8.7 | 9.7 |
| | SDT | 104.1 | 108.4 | 117.2 | 125.9 | 134.3 | 142.6 |

**LEGEND:**

kW – Compressor Power
SDT – Saturated Discharge Temperature at Compressor
SST – Saturated Suction Temperature
TC – Gross Cooling Capacity (1000 Btuh)

## 38AUD12 Circuit A 50 Hz CONDENSER ONLY RATINGS SI

| SST (°C) | | Air Temperature entering Condenser (° C) | | | | | |
|---|---|---|---|---|---|---|---|
| | | 27 | 29 | 35 | 41 | 46 | 52 |
| -7 | TC | 9.6 | 39.4 | 37.0 | 34.2 | 30.9 | 27.2 |
| | kW | 3.6 | 3.9 | 4.4 | 5.0 | 5.7 | 6.3 |
| | SDT | 35.4 | 37.9 | 43.0 | 48.1 | 53.1 | 58.0 |
| -4 | TC | 10.6 | 39.4 | 37.0 | 34.2 | 30.9 | 27.2 |
| | kW | 3.6 | 3.9 | 4.4 | 5.0 | 5.7 | 6.3 |
| | SDT | 36.1 | 38.6 | 43.7 | 48.7 | 53.7 | 58.6 |
| -1 | TC | 11.7 | 39.4 | 37.0 | 34.2 | 30.9 | 27.2 |
| | kW | 3.6 | 3.9 | 4.4 | 5.0 | 5.7 | 6.3 |
| | SDT | 36.8 | 39.3 | 44.3 | 49.3 | 54.3 | 59.1 |
| 2 | TC | 12.8 | 39.4 | 37.0 | 34.2 | 30.9 | 27.2 |
| | kW | 3.6 | 3.9 | 4.4 | 5.0 | 5.7 | 6.3 |
| | SDT | 37.5 | 40.0 | 45.0 | 50.0 | 54.9 | 59.6 |
| 4 | TC | 14.0 | 39.4 | 37.0 | 34.2 | 30.9 | 27.2 |
| | kW | 3.6 | 3.9 | 4.4 | 5.0 | 5.7 | 6.3 |
| | SDT | 38.3 | 40.8 | 45.7 | 50.6 | 55.5 | 60.1 |
| 7 | TC | 15.2 | 39.4 | 37.0 | 34.2 | 30.9 | 27.2 |
| | kW | 3.6 | 3.9 | 4.4 | 5.0 | 5.7 | 6.3 |
| | SDT | 39.1 | 41.5 | 46.4 | 51.3 | 56.0 | 60.7 |
| 10 | TC | 16.5 | 39.4 | 37.0 | 34.2 | 30.9 | 27.2 |
| | kW | 3.6 | 3.9 | 4.4 | 5.0 | 5.7 | 6.3 |
| | SDT | 39.9 | 42.3 | 47.1 | 52.0 | 56.6 | 61.2 |

## 38AUD12 Circuit A 50 Hz CONDENSER ONLY RATINGS ENGLISH

| SST (°F) | | Air Temperature entering Condenser (°F) | | | | | |
|---|---|---|---|---|---|---|---|
| | | 80 | 85 | 95 | 105 | 115 | 125 |
| 20 | TC | 32.9 | 31.8 | 29.6 | 27.2 | 24.7 | 22.1 |
| | kW | 2.6 | 2.8 | 3.2 | 3.6 | 4.1 | 4.5 |
| | SDT | 95.7 | 100.3 | 109.4 | 118.6 | 127.6 | 136.4 |
| 25 | TC | 36.3 | 35.1 | 32.6 | 30.1 | 27.4 | 24.6 |
| | kW | 2.6 | 2.8 | 3.2 | 3.7 | 4.1 | 4.6 |
| | SDT | 96.9 | 101.5 | 110.6 | 119.7 | 128.6 | 137.4 |
| 30 | TC | 39.9 | 38.6 | 35.9 | 33.2 | 30.3 | 27.3 |
| | kW | 2.6 | 2.8 | 3.3 | 3.7 | 4.2 | 4.7 |
| | SDT | 98.3 | 102.8 | 111.8 | 120.8 | 129.7 | 138.3 |
| 35 | TC | 43.7 | 42.2 | 39.4 | 36.4 | 33.3 | 30.1 |
| | kW | 2.7 | 2.9 | 3.3 | 3.8 | 4.2 | 4.7 |
| | SDT | 99.6 | 104.1 | 113.0 | 122.0 | 130.7 | 139.3 |
| 40 | TC | 47.6 | 46.1 | 43.0 | 39.8 | 36.5 | 32.9 |
| | kW | 2.7 | 2.9 | 3.3 | 3.8 | 4.3 | 4.8 |
| | SDT | 101.0 | 105.4 | 114.3 | 123.1 | 131.8 | 140.3 |
| 45 | TC | 51.8 | 50.1 | 46.8 | 43.3 | 39.6 | 35.9 |
| | kW | 2.8 | 3.0 | 3.4 | 3.8 | 4.3 | 4.8 |
| | SDT | 102.3 | 106.7 | 115.5 | 124.3 | 132.9 | 141.3 |
| 50 | TC | 56.2 | 54.3 | 50.6 | 46.8 | 42.8 | 38.6 |
| | kW | 2.8 | 3.0 | 3.4 | 3.9 | 4.3 | 4.8 |
| | SDT | 103.8 | 108.1 | 116.8 | 125.5 | 133.9 | 142.1 |

**LEGEND:**

kW – Compressor Power
SDT – Saturated Discharge Temperature at Compressor
SST – Saturated Suction Temperature
TC – Gross Cooling Capacity (1000 Btuh)

# PERFORMANCE DATA (cont.)

## 38AUD12 Circuit B 50 Hz CONDENSER ONLY RATINGS SI

| SST (°C) | | Air Temperature entering Condenser (°C) | | | | | |
|---|---|---|---|---|---|---|---|
| | | 27 | 29 | 35 | 41 | 46 | 52 |
| -7 | TC | 9.8 | 39.4 | 37.0 | 34.2 | 30.9 | 27.2 |
| | kW | 3.6 | 3.9 | 4.4 | 5.0 | 5.7 | 6.3 |
| | SDT | 35.6 | 38.2 | 43.3 | 48.3 | 53.3 | 58.3 |
| -4 | TC | 10.9 | 39.4 | 37.0 | 34.2 | 30.9 | 27.2 |
| | kW | 3.6 | 3.9 | 4.4 | 5.0 | 5.7 | 6.3 |
| | SDT | 36.3 | 38.9 | 43.9 | 49.0 | 53.9 | 58.8 |
| -1 | TC | 12.0 | 39.4 | 37.0 | 34.2 | 30.9 | 27.2 |
| | kW | 3.6 | 3.9 | 4.4 | 5.0 | 5.7 | 6.3 |
| | SDT | 37.1 | 39.6 | 44.6 | 49.6 | 54.6 | 59.4 |
| 2 | TC | 13.2 | 39.4 | 37.0 | 34.2 | 30.9 | 27.2 |
| | kW | 3.6 | 3.9 | 4.4 | 5.0 | 5.7 | 6.3 |
| | SDT | 37.8 | 40.3 | 45.3 | 50.3 | 55.2 | 60.0 |
| 4 | TC | 14.4 | 39.4 | 37.0 | 34.2 | 30.9 | 27.2 |
| | kW | 3.6 | 3.9 | 4.4 | 5.0 | 5.7 | 6.3 |
| | SDT | 38.6 | 41.1 | 46.0 | 51.0 | 55.8 | 60.5 |
| 7 | TC | 15.7 | 39.4 | 37.0 | 34.2 | 30.9 | 27.2 |
| | kW | 3.6 | 3.9 | 4.4 | 5.0 | 5.7 | 6.3 |
| | SDT | 39.4 | 41.8 | 46.8 | 51.6 | 56.4 | 61.1 |
| 10 | TC | 17.1 | 39.4 | 37.0 | 34.2 | 30.9 | 27.2 |
| | kW | 3.6 | 3.9 | 4.4 | 5.0 | 5.7 | 6.3 |
| | SDT | 40.2 | 42.7 | 47.5 | 52.3 | 57.1 | 61.7 |

## 38AUD12 Circuit B 50 Hz CONDENSER ONLY RATINGS ENGLISH

| SST (°F) | | Air Temperature entering Condenser (°F) | | | | | |
|---|---|---|---|---|---|---|---|
| | | 80 | 85 | 95 | 105 | 115 | 125 |
| 20 | TC | 33.6 | 32.5 | 30.2 | 27.8 | 25.3 | 22.7 |
| | kW | 2.6 | 2.8 | 3.2 | 3.7 | 4.1 | 4.5 |
| | SDT | 96.1 | 100.7 | 109.9 | 119.0 | 128.0 | 136.9 |
| 25 | TC | 37.1 | 35.9 | 33.5 | 30.9 | 28.2 | 25.4 |
| | kW | 2.6 | 2.8 | 3.2 | 3.7 | 4.2 | 4.6 |
| | SDT | 97.4 | 101.9 | 111.1 | 120.2 | 129.1 | 137.9 |
| 30 | TC | 40.9 | 39.6 | 37.0 | 34.2 | 31.3 | 28.2 |
| | kW | 2.7 | 2.9 | 3.3 | 3.7 | 4.2 | 4.7 |
| | SDT | 98.7 | 103.3 | 112.3 | 121.3 | 130.2 | 138.9 |
| 35 | TC | 44.9 | 43.5 | 40.6 | 37.6 | 34.6 | 31.3 |
| | kW | 2.7 | 2.9 | 3.3 | 3.8 | 4.3 | 4.7 |
| | SDT | 100.1 | 104.6 | 113.6 | 122.6 | 131.4 | 139.9 |
| 40 | TC | 49.2 | 47.7 | 44.5 | 41.4 | 38.0 | 34.5 |
| | kW | 2.7 | 2.9 | 3.4 | 3.8 | 4.3 | 4.8 |
| | SDT | 101.5 | 106.0 | 114.9 | 123.7 | 132.5 | 141.0 |
| 45 | TC | 53.7 | 52.1 | 48.7 | 45.2 | 41.6 | 37.8 |
| | kW | 2.8 | 3.0 | 3.4 | 3.9 | 4.3 | 4.8 |
| | SDT | 102.9 | 107.3 | 116.2 | 125.0 | 133.6 | 142.0 |
| 50 | TC | 58.5 | 56.7 | 53.0 | 49.2 | 45.2 | 41.1 |
| | kW | 2.8 | 3.0 | 3.5 | 3.9 | 4.4 | 4.9 |
| | SDT | 104.4 | 108.8 | 117.6 | 126.2 | 134.7 | 143.0 |

**LEGEND:**

kW – Compressor Power
SDT – Saturated Discharge Temperature at Compressor
SST – Saturated Suction Temperature
TC – Gross Cooling Capacity (1000 Btuh)

## 38AUD14 Total Unit 50 Hz CONDENSER ONLY RATINGS SI

| SST (°C) | | Air Temperature entering Condenser (°C) | | | | | |
|---|---|---|---|---|---|---|---|
| | | 27 | 29 | 35 | 41 | 46 | 52 |
| -7 | TC | 24.5 | 39.4 | 37.0 | 34.2 | 30.9 | 27.2 |
| | kW | 3.6 | 3.9 | 4.4 | 5.0 | 5.7 | 6.3 |
| | SDT | 36.5 | 39.0 | 44.0 | 48.9 | 53.7 | 58.4 |
| -4 | TC | 27.0 | 39.4 | 37.0 | 34.2 | 30.9 | 27.2 |
| | kW | 3.6 | 3.9 | 4.4 | 5.0 | 5.7 | 6.3 |
| | SDT | 37.4 | 39.8 | 44.8 | 49.6 | 54.4 | 59.1 |
| -1 | TC | 29.6 | 39.4 | 37.0 | 34.2 | 30.9 | 27.2 |
| | kW | 3.6 | 3.9 | 4.4 | 5.0 | 5.7 | 6.3 |
| | SDT | 38.2 | 40.7 | 45.6 | 50.4 | 55.1 | 59.7 |
| 2 | TC | 32.3 | 39.4 | 37.0 | 34.2 | 30.9 | 27.2 |
| | kW | 3.6 | 3.9 | 4.4 | 5.0 | 5.7 | 6.3 |
| | SDT | 39.1 | 41.5 | 46.4 | 51.2 | 55.9 | 60.4 |
| 4 | TC | 35.1 | 39.4 | 37.0 | 34.2 | 30.9 | 27.2 |
| | kW | 3.6 | 3.9 | 4.4 | 5.0 | 5.7 | 6.3 |
| | SDT | 40.0 | 42.4 | 47.2 | 52.0 | 56.6 | 61.1 |
| 7 | TC | 38.0 | 39.4 | 37.0 | 34.2 | 30.9 | 27.2 |
| | kW | 3.6 | 3.9 | 4.4 | 5.0 | 5.7 | 6.3 |
| | SDT | 40.9 | 43.3 | 48.1 | 52.8 | 57.4 | 61.7 |
| 10 | TC | 40.8 | 39.4 | 37.0 | 34.2 | 30.9 | 27.2 |
| | kW | 3.6 | 3.9 | 4.4 | 5.0 | 5.7 | 6.3 |
| | SDT | 41.9 | 44.3 | 48.9 | 53.6 | 58.1 | 62.4 |

## 38AUD14 Total Unit 50 Hz CONDENSER ONLY RATINGS ENGLISH

| SST (°F) | | Air Temperature entering Condenser (°F) | | | | | |
|---|---|---|---|---|---|---|---|
| | | 80 | 85 | 95 | 105 | 115 | 125 |
| 20 | TC | 83.7 | 80.8 | 74.6 | 68.0 | 61.0 | 53.9 |
| | kW | 7.0 | 7.5 | 8.4 | 9.3 | 10.2 | 11.0 |
| | SDT | 97.8 | 102.2 | 111.2 | 120.0 | 128.7 | 137.2 |
| 25 | TC | 92.1 | 89.0 | 82.3 | 75.4 | 67.9 | 60.3 |
| | kW | 7.1 | 7.6 | 8.5 | 9.5 | 10.4 | 11.3 |
| | SDT | 99.3 | 103.7 | 112.6 | 121.4 | 129.9 | 138.3 |
| 30 | TC | 101.0 | 97.5 | 90.5 | 83.0 | 75.3 | 66.8 |
| | kW | 7.3 | 7.7 | 8.7 | 9.7 | 10.6 | 11.6 |
| | SDT | 100.8 | 105.2 | 114.0 | 122.7 | 131.3 | 139.5 |
| 35 | TC | 110.2 | 106.5 | 98.9 | 91.0 | 82.4 | 73.5 |
| | kW | 7.4 | 7.9 | 8.8 | 9.8 | 10.8 | 11.8 |
| | SDT | 102.4 | 106.8 | 115.5 | 124.2 | 132.6 | 140.8 |
| 40 | TC | 119.8 | 115.7 | 107.6 | 98.9 | 89.8 | 80.1 |
| | kW | 7.6 | 8.0 | 9.0 | 10.0 | 11.0 | 12.1 |
| | SDT | 104.0 | 108.3 | 117.0 | 125.6 | 133.9 | 141.9 |
| 45 | TC | 129.6 | 125.1 | 116.1 | 106.8 | 97.1 | 86.6 |
| | kW | 7.7 | 8.2 | 9.2 | 10.2 | 11.2 | 12.3 |
| | SDT | 105.7 | 110.0 | 118.5 | 127.0 | 135.2 | 143.1 |
| 50 | TC | 139.3 | 134.6 | 124.7 | 114.8 | 104.1 | 93.1 |
| | kW | 7.9 | 8.4 | 9.3 | 10.4 | 11.4 | 12.5 |
| | SDT | 107.4 | 111.7 | 120.1 | 128.5 | 136.5 | 144.4 |

**LEGEND:**

kW – Compressor Power
SDT – Saturated Discharge Temperature at Compressor
SST – Saturated Suction Temperature
TC – Gross Cooling Capacity (1000 Btuh)

# PERFORMANCE DATA (cont.)

## 38AUD14 Circuit A 50 Hz CONDENSER ONLY RATINGS SI

| SST (°C) | | Air Temperature entering Condenser (°C) | | | | | |
|---|---|---|---|---|---|---|---|
| | | 27 | 29 | 35 | 41 | 46 | 52 |
| -7 | TC | 12.3 | 39.4 | 37.0 | 34.2 | 30.9 | 27.2 |
| | kW | 3.6 | 3.9 | 4.4 | 5.0 | 5.7 | 6.3 |
| | SDT | 36.3 | 38.8 | 43.7 | 48.7 | 53.5 | 58.2 |
| -4 | TC | 13.6 | 39.4 | 37.0 | 34.2 | 30.9 | 27.2 |
| | kW | 3.6 | 3.9 | 4.4 | 5.0 | 5.7 | 6.3 |
| | SDT | 37.1 | 39.6 | 44.5 | 49.4 | 54.2 | 58.9 |
| -1 | TC | 14.9 | 39.4 | 37.0 | 34.2 | 30.9 | 27.2 |
| | kW | 3.6 | 3.9 | 4.4 | 5.0 | 5.7 | 6.3 |
| | SDT | 37.9 | 40.4 | 45.3 | 50.1 | 54.9 | 59.5 |
| 2 | TC | 16.2 | 39.4 | 37.0 | 34.2 | 30.9 | 27.2 |
| | kW | 3.6 | 3.9 | 4.4 | 5.0 | 5.7 | 6.3 |
| | SDT | 38.8 | 41.2 | 46.1 | 50.9 | 55.6 | 60.2 |
| 4 | TC | 17.7 | 39.4 | 37.0 | 34.2 | 30.9 | 27.2 |
| | kW | 3.6 | 3.9 | 4.4 | 5.0 | 5.7 | 6.3 |
| | SDT | 39.7 | 42.1 | 46.9 | 51.7 | 56.4 | 60.9 |
| 7 | TC | 19.1 | 39.4 | 37.0 | 34.2 | 30.9 | 27.2 |
| | kW | 3.6 | 3.9 | 4.4 | 5.0 | 5.7 | 6.3 |
| | SDT | 40.6 | 43.0 | 47.8 | 52.5 | 57.1 | 61.5 |
| 10 | TC | 20.6 | 39.4 | 37.0 | 34.2 | 30.9 | 27.2 |
| | kW | 3.6 | 3.9 | 4.4 | 5.0 | 5.7 | 6.3 |
| | SDT | 41.6 | 43.9 | 48.6 | 53.3 | 57.8 | 62.2 |

## 38AUD14 Circuit A 50 Hz CONDENSER ONLY RATINGS ENGLISH

| SST (°F) | | Air Temperature entering Condenser (°F) | | | | | |
|---|---|---|---|---|---|---|---|
| | | 80 | 85 | 95 | 105 | 115 | 125 |
| 20 | TC | 42.0 | 40.5 | 37.4 | 34.2 | 30.7 | 27.1 |
| | kW | 3.5 | 3.8 | 4.2 | 4.7 | 5.1 | 5.5 |
| | SDT | 97.3 | 101.8 | 110.7 | 119.6 | 128.3 | 136.8 |
| 25 | TC | 46.2 | 44.7 | 41.4 | 37.9 | 34.2 | 30.3 |
| | kW | 3.6 | 3.8 | 4.3 | 4.8 | 5.2 | 5.7 |
| | SDT | 98.8 | 103.2 | 112.1 | 120.9 | 129.5 | 138.0 |
| 30 | TC | 50.7 | 49.0 | 45.5 | 41.7 | 37.9 | 33.7 |
| | kW | 3.7 | 3.9 | 4.4 | 4.9 | 5.3 | 5.8 |
| | SDT | 100.3 | 104.7 | 113.6 | 122.3 | 130.8 | 139.1 |
| 35 | TC | 55.4 | 53.5 | 49.7 | 45.8 | 41.5 | 37.0 |
| | kW | 3.7 | 4.0 | 4.4 | 4.9 | 5.4 | 5.9 |
| | SDT | 101.8 | 106.2 | 115.0 | 123.7 | 132.1 | 140.4 |
| 40 | TC | 60.2 | 58.2 | 54.1 | 49.8 | 45.2 | 40.4 |
| | kW | 3.8 | 4.0 | 4.5 | 5.0 | 5.6 | 6.1 |
| | SDT | 103.5 | 107.8 | 116.5 | 125.1 | 133.4 | 141.5 |
| 45 | TC | 65.2 | 62.9 | 58.4 | 53.8 | 48.9 | 43.7 |
| | kW | 3.9 | 4.1 | 4.6 | 5.1 | 5.6 | 6.2 |
| | SDT | 105.1 | 109.4 | 118.0 | 126.5 | 134.8 | 142.7 |
| 50 | TC | 70.2 | 67.8 | 62.8 | 57.9 | 52.5 | 47.0 |
| | kW | 4.0 | 4.2 | 4.7 | 5.2 | 5.7 | 6.3 |
| | SDT | 106.8 | 111.1 | 119.5 | 127.9 | 136.0 | 143.9 |

**LEGEND:**

kW – Compressor Power
SDT – Saturated Discharge Temperature at Compressor
SST – Saturated Suction Temperature
TC – Gross Cooling Capacity (1000 Btuh)

## 38AUD14 Circuit B 50 Hz CONDENSER ONLY RATINGS SI

| SST (°C) | | Air Temperature entering Condenser (°C) | | | | | |
|---|---|---|---|---|---|---|---|
| | | 27 | 29 | 35 | 41 | 46 | 52 |
| -7 | TC | 12.2 | 39.4 | 37.0 | 34.2 | 30.9 | 27.2 |
| | kW | 3.6 | 3.9 | 4.4 | 5.0 | 5.7 | 6.3 |
| | SDT | 36.8 | 39.3 | 44.2 | 49.1 | 53.9 | 58.6 |
| -4 | TC | 13.4 | 39.4 | 37.0 | 34.2 | 30.9 | 27.2 |
| | kW | 3.6 | 3.9 | 4.4 | 5.0 | 5.7 | 6.3 |
| | SDT | 37.6 | 40.1 | 45.0 | 49.9 | 54.6 | 59.3 |
| -1 | TC | 14.7 | 39.4 | 37.0 | 34.2 | 30.9 | 27.2 |
| | kW | 3.6 | 3.9 | 4.4 | 5.0 | 5.7 | 6.3 |
| | SDT | 38.5 | 41.0 | 45.9 | 50.7 | 55.4 | 60.0 |
| 2 | TC | 16.1 | 39.4 | 37.0 | 34.2 | 30.9 | 27.2 |
| | kW | 3.6 | 3.9 | 4.4 | 5.0 | 5.7 | 6.3 |
| | SDT | 39.4 | 41.8 | 46.7 | 51.5 | 56.1 | 60.7 |
| 4 | TC | 17.5 | 39.4 | 37.0 | 34.2 | 30.9 | 27.2 |
| | kW | 3.6 | 3.9 | 4.4 | 5.0 | 5.7 | 6.3 |
| | SDT | 40.3 | 42.7 | 47.5 | 52.3 | 56.9 | 61.3 |
| 7 | TC | 18.9 | 39.4 | 37.0 | 34.2 | 30.9 | 27.2 |
| | kW | 3.6 | 3.9 | 4.4 | 5.0 | 5.7 | 6.3 |
| | SDT | 41.3 | 43.6 | 48.4 | 53.1 | 57.6 | 62.0 |
| 10 | TC | 20.3 | 39.4 | 37.0 | 34.2 | 30.9 | 27.2 |
| | kW | 3.6 | 3.9 | 4.4 | 5.0 | 5.7 | 6.3 |
| | SDT | 42.2 | 44.6 | 49.2 | 53.9 | 58.4 | 62.7 |

## 38AUD14 Circuit B 50 Hz CONDENSER ONLY RATINGS ENGLISH

| SST (°F) | | Air Temperature entering Condenser (°F) | | | | | |
|---|---|---|---|---|---|---|---|
| | | 80 | 85 | 95 | 105 | 115 | 125 |
| 20 | TC | 41.7 | 40.2 | 37.1 | 33.8 | 30.3 | 26.8 |
| | kW | 3.5 | 3.7 | 4.2 | 4.6 | 5.1 | 5.5 |
| | SDT | 98.2 | 102.7 | 111.6 | 120.4 | 129.1 | 137.6 |
| 25 | TC | 45.9 | 44.3 | 41.0 | 37.5 | 33.8 | 29.9 |
| | kW | 3.5 | 3.8 | 4.2 | 4.7 | 5.2 | 5.6 |
| | SDT | 99.7 | 104.2 | 113.1 | 121.8 | 130.3 | 138.7 |
| 30 | TC | 50.2 | 48.5 | 45.0 | 41.3 | 37.4 | 33.2 |
| | kW | 3.6 | 3.8 | 4.3 | 4.8 | 5.3 | 5.8 |
| | SDT | 101.3 | 105.7 | 114.5 | 123.2 | 131.7 | 139.9 |
| 35 | TC | 54.8 | 53.0 | 49.2 | 45.2 | 40.9 | 36.5 |
| | kW | 3.7 | 3.9 | 4.4 | 4.9 | 5.4 | 5.9 |
| | SDT | 102.9 | 107.3 | 116.0 | 124.6 | 133.0 | 141.2 |
| 40 | TC | 59.6 | 57.5 | 53.5 | 49.1 | 44.6 | 39.7 |
| | kW | 3.8 | 4.0 | 4.5 | 5.0 | 5.5 | 6.0 |
| | SDT | 104.6 | 108.9 | 117.6 | 126.1 | 134.4 | 142.4 |
| 45 | TC | 64.4 | 62.1 | 57.6 | 53.0 | 48.1 | 42.9 |
| | kW | 3.8 | 4.1 | 4.5 | 5.1 | 5.6 | 6.1 |
| | SDT | 106.3 | 110.5 | 119.1 | 127.5 | 135.7 | 143.6 |
| 50 | TC | 69.2 | 66.8 | 61.9 | 56.9 | 51.6 | 46.2 |
| | kW | 3.9 | 4.1 | 4.6 | 5.1 | 5.7 | 6.2 |
| | SDT | 108.0 | 112.3 | 120.6 | 129.0 | 137.0 | 144.8 |

**LEGEND:**

kW – Compressor Power
SDT – Saturated Discharge Temperature at Compressor
SST – Saturated Suction Temperature
TC – Gross Cooling Capacity (1000 Btuh)

## 38AUD16 Total Unit 50 Hz CONDENSER ONLY RATINGS SI

| SST (°C) | | Air Temperature entering Condenser (°C) | | | | | |
|---|---|---|---|---|---|---|---|
| | | 27 | 29 | 35 | 41 | 46 | 52 |
| -7 | TC | 31.6 | 39.4 | 37.0 | 34.2 | 30.9 | 27.2 |
| | kW | 3.6 | 3.9 | 4.4 | 5.0 | 5.7 | 6.3 |
| | SDT | 35.4 | 38.0 | 43.2 | 48.3 | 53.4 | 58.4 |
| -4 | TC | 34.8 | 39.4 | 37.0 | 34.2 | 30.9 | 27.2 |
| | kW | 3.6 | 3.9 | 4.4 | 5.0 | 5.7 | 6.3 |
| | SDT | 36.2 | 38.7 | 43.8 | 48.9 | 53.9 | 58.9 |
| -1 | TC | 38.3 | 39.4 | 37.0 | 34.2 | 30.9 | 27.2 |
| | kW | 3.6 | 3.9 | 4.4 | 5.0 | 5.7 | 6.3 |
| | SDT | 36.9 | 39.5 | 44.5 | 49.5 | 54.5 | 59.4 |
| 2 | TC | 41.9 | 39.4 | 37.0 | 34.2 | 30.9 | 27.2 |
| | kW | 3.6 | 3.9 | 4.4 | 5.0 | 5.7 | 6.3 |
| | SDT | 37.7 | 40.2 | 45.2 | 50.2 | 55.1 | 59.9 |
| 4 | TC | 45.6 | 39.4 | 37.0 | 34.2 | 30.9 | 27.2 |
| | kW | 3.6 | 3.9 | 4.4 | 5.0 | 5.7 | 6.3 |
| | SDT | 38.5 | 41.0 | 45.9 | 50.9 | 55.7 | 60.5 |
| 7 | TC | 49.7 | 39.4 | 37.0 | 34.2 | 30.9 | 27.2 |
| | kW | 3.6 | 3.9 | 4.4 | 5.0 | 5.7 | 6.3 |
| | SDT | 39.3 | 41.8 | 46.7 | 51.6 | 56.4 | 61.0 |
| 10 | TC | 53.9 | 39.4 | 37.0 | 34.2 | 30.9 | 27.2 |
| | kW | 3.6 | 3.9 | 4.4 | 5.0 | 5.7 | 6.3 |
| | SDT | 40.2 | 42.6 | 47.5 | 52.3 | 57.0 | 61.6 |

## 38AUD16 Total Unit 50 Hz CONDENSER ONLY RATINGS ENGLISH

| SST (°F) | | Air Temperature entering Condenser (°F) | | | | | |
|---|---|---|---|---|---|---|---|
| | | 80 | 85 | 95 | 105 | 115 | 125 |
| 20 | TC | 107.8 | 104.6 | 97.9 | 90.9 | 83.7 | 76.1 |
| | kW | 8.4 | 8.9 | 10.0 | 11.2 | 12.5 | 13.9 |
| | SDT | 95.8 | 100.4 | 109.7 | 118.9 | 128.1 | 137.1 |
| 25 | TC | 118.8 | 115.3 | 107.9 | 100.4 | 92.4 | 84.1 |
| | kW | 8.6 | 9.1 | 10.2 | 11.4 | 12.7 | 14.1 |
| | SDT | 97.1 | 101.7 | 110.9 | 120.0 | 129.1 | 138.0 |
| 30 | TC | 130.5 | 126.6 | 118.6 | 110.3 | 101.6 | 92.7 |
| | kW | 8.7 | 9.2 | 10.3 | 11.6 | 12.9 | 14.3 |
| | SDT | 98.4 | 103.0 | 112.1 | 121.2 | 130.1 | 138.9 |
| 35 | TC | 142.8 | 138.5 | 129.7 | 120.8 | 111.5 | 101.6 |
| | kW | 8.9 | 9.4 | 10.5 | 11.7 | 13.0 | 14.4 |
| | SDT | 99.8 | 104.3 | 113.4 | 122.4 | 131.2 | 139.9 |
| 40 | TC | 155.8 | 151.0 | 141.6 | 132.0 | 121.7 | 110.7 |
| | kW | 9.1 | 9.6 | 10.7 | 11.9 | 13.2 | 14.6 |
| | SDT | 101.3 | 105.7 | 114.7 | 123.6 | 132.3 | 140.8 |
| 45 | TC | 169.5 | 164.3 | 154.0 | 143.4 | 132.0 | 120.1 |
| | kW | 9.3 | 9.8 | 10.9 | 12.1 | 13.4 | 14.8 |
| | SDT | 102.7 | 107.2 | 116.0 | 124.8 | 133.5 | 141.9 |
| 50 | TC | 183.9 | 178.2 | 166.8 | 154.9 | 142.6 | 129.5 |
| | kW | 9.5 | 10.0 | 11.1 | 12.3 | 13.6 | 15.0 |
| | SDT | 104.3 | 108.7 | 117.4 | 126.1 | 134.6 | 142.9 |

**LEGEND:**

kW – Compressor Power
SDT – Saturated Discharge Temperature at Compressor
SST – Saturated Suction Temperature
TC – Gross Cooling Capacity (1000 Btuh)

## 38AUD16 Circuit A 50 Hz CONDENSER ONLY RATINGS SI

| SST (°C) | | Air Temperature entering Condenser (°C) | | | | | |
|---|---|---|---|---|---|---|---|
| | | 27 | 29 | 35 | 41 | 46 | 52 |
| -7 | TC | 15.8 | 39.4 | 37.0 | 34.2 | 30.9 | 27.2 |
| | kW | 3.6 | 3.9 | 4.4 | 5.0 | 5.7 | 6.3 |
| | SDT | 35.9 | 38.5 | 43.6 | 48.7 | 53.8 | 58.8 |
| -4 | TC | 17.4 | 39.4 | 37.0 | 34.2 | 30.9 | 27.2 |
| | kW | 3.6 | 3.9 | 4.4 | 5.0 | 5.7 | 6.3 |
| | SDT | 36.6 | 39.2 | 44.3 | 49.4 | 54.3 | 59.3 |
| -1 | TC | 19.1 | 39.4 | 37.0 | 34.2 | 30.9 | 27.2 |
| | kW | 3.6 | 3.9 | 4.4 | 5.0 | 5.7 | 6.3 |
| | SDT | 37.4 | 39.9 | 45.0 | 50.0 | 54.9 | 59.8 |
| 2 | TC | 20.8 | 39.4 | 37.0 | 34.2 | 30.9 | 27.2 |
| | kW | 3.6 | 3.9 | 4.4 | 5.0 | 5.7 | 6.3 |
| | SDT | 38.2 | 40.7 | 45.7 | 50.7 | 55.6 | 60.3 |
| 4 | TC | 22.7 | 39.4 | 37.0 | 34.2 | 30.9 | 27.2 |
| | kW | 3.6 | 3.9 | 4.4 | 5.0 | 5.7 | 6.3 |
| | SDT | 39.0 | 41.5 | 46.4 | 51.4 | 56.2 | 60.9 |
| 7 | TC | 24.7 | 39.4 | 37.0 | 34.2 | 30.9 | 27.2 |
| | kW | 3.6 | 3.9 | 4.4 | 5.0 | 5.7 | 6.3 |
| | SDT | 39.9 | 42.3 | 47.2 | 52.1 | 56.8 | 61.5 |
| 10 | TC | 26.8 | 39.4 | 37.0 | 34.2 | 30.9 | 27.2 |
| | kW | 3.6 | 3.9 | 4.4 | 5.0 | 5.7 | 6.3 |
| | SDT | 40.7 | 43.1 | 48.0 | 52.8 | 57.5 | 62.1 |

## 38AUD16 Circuit A 50 Hz CONDENSER ONLY RATINGS ENGLISH

| SST (°F) | | Air Temperature entering Condenser (°F) | | | | | |
|---|---|---|---|---|---|---|---|
| | | 80 | 85 | 95 | 105 | 115 | 125 |
| 20 | TC | 53.8 | 52.2 | 48.8 | 45.3 | 41.7 | 37.9 |
| | kW | 4.2 | 4.5 | 5.1 | 5.7 | 6.3 | 7.0 |
| | SDT | 96.6 | 101.2 | 110.5 | 119.7 | 128.8 | 137.8 |
| 25 | TC | 59.3 | 57.5 | 53.8 | 50.0 | 46.0 | 41.9 |
| | kW | 4.3 | 4.6 | 5.1 | 5.7 | 6.4 | 7.1 |
| | SDT | 97.9 | 102.5 | 111.7 | 120.8 | 129.8 | 138.7 |
| 30 | TC | 65.1 | 63.1 | 59.0 | 54.9 | 50.6 | 46.1 |
| | kW | 4.4 | 4.7 | 5.2 | 5.8 | 6.5 | 7.2 |
| | SDT | 99.3 | 103.9 | 112.9 | 122.0 | 130.9 | 139.6 |
| 35 | TC | 71.1 | 68.9 | 64.5 | 60.1 | 55.4 | 50.5 |
| | kW | 4.5 | 4.8 | 5.3 | 5.9 | 6.6 | 7.3 |
| | SDT | 100.7 | 105.2 | 114.2 | 123.2 | 132.0 | 140.6 |
| 40 | TC | 77.5 | 75.1 | 70.4 | 65.6 | 60.5 | 55.0 |
| | kW | 4.6 | 4.9 | 5.4 | 6.0 | 6.7 | 7.4 |
| | SDT | 102.2 | 106.7 | 115.6 | 124.5 | 133.2 | 141.6 |
| 45 | TC | 84.3 | 81.7 | 76.6 | 71.3 | 65.6 | 59.6 |
| | kW | 4.7 | 5.0 | 5.5 | 6.1 | 6.8 | 7.5 |
| | SDT | 103.7 | 108.1 | 117.0 | 125.7 | 134.3 | 142.7 |
| 50 | TC | 91.4 | 88.6 | 82.9 | 76.9 | 70.8 | 64.3 |
| | kW | 4.8 | 5.1 | 5.6 | 6.2 | 6.9 | 7.6 |
| | SDT | 105.3 | 109.7 | 118.4 | 127.0 | 135.5 | 143.7 |

**LEGEND:**

kW – Compressor Power
SDT – Saturated Discharge Temperature at Compressor
SST – Saturated Suction Temperature
TC – Gross Cooling Capacity (1000 Btuh)

# PERFORMANCE DATA (cont.)

## 38AUD16 Circuit B 50 Hz CONDENSER ONLY RATINGS SI

| SST (°C) | | Air Temperature entering Condenser (°C) | | | | | |
|---|---|---|---|---|---|---|---|
| | | 27 | 29 | 35 | 41 | 46 | 52 |
| -7 | TC | 15.8 | 39.4 | 37.0 | 34.2 | 30.9 | 27.2 |
| | kW | 3.6 | 3.9 | 4.4 | 5.0 | 5.7 | 6.3 |
| | SDT | 35.0 | 37.6 | 42.7 | 47.9 | 53.0 | 58.0 |
| -4 | TC | 17.5 | 39.4 | 37.0 | 34.2 | 30.9 | 27.2 |
| | kW | 3.6 | 3.9 | 4.4 | 5.0 | 5.7 | 6.3 |
| | SDT | 35.7 | 38.3 | 43.4 | 48.5 | 53.5 | 58.5 |
| -1 | TC | 19.2 | 39.4 | 37.0 | 34.2 | 30.9 | 27.2 |
| | kW | 3.6 | 3.9 | 4.4 | 5.0 | 5.7 | 6.3 |
| | SDT | 36.4 | 39.0 | 44.0 | 49.1 | 54.1 | 59.0 |
| 2 | TC | 21.0 | 39.4 | 37.0 | 34.2 | 30.9 | 27.2 |
| | kW | 3.6 | 3.9 | 4.4 | 5.0 | 5.7 | 6.3 |
| | SDT | 37.2 | 39.7 | 44.7 | 49.7 | 54.7 | 59.5 |
| 4 | TC | 22.9 | 39.4 | 37.0 | 34.2 | 30.9 | 27.2 |
| | kW | 3.6 | 3.9 | 4.4 | 5.0 | 5.7 | 6.3 |
| | SDT | 38.0 | 40.4 | 45.4 | 50.4 | 55.3 | 60.0 |
| 7 | TC | 25.0 | 39.4 | 37.0 | 34.2 | 30.9 | 27.2 |
| | kW | 3.6 | 3.9 | 4.4 | 5.0 | 5.7 | 6.3 |
| | SDT | 38.8 | 41.2 | 46.2 | 51.1 | 55.9 | 60.6 |
| 10 | TC | 27.1 | 39.4 | 37.0 | 34.2 | 30.9 | 27.2 |
| | kW | 3.6 | 3.9 | 4.4 | 5.0 | 5.7 | 6.3 |
| | SDT | 39.6 | 42.0 | 46.9 | 51.8 | 56.5 | 61.2 |

## 38AUD16 Circuit B 50 Hz CONDENSER ONLY RATINGS ENGLISH

| SST (°F) | | Air Temperature entering Condenser (°F) | | | | | |
|---|---|---|---|---|---|---|---|
| | | 80 | 85 | 95 | 105 | 115 | 125 |
| 20 | TC | 54.0 | 52.4 | 49.1 | 45.6 | 42.0 | 38.2 |
| | kW | 4.2 | 4.4 | 5.0 | 5.6 | 6.2 | 6.9 |
| | SDT | 95.0 | 99.7 | 108.9 | 118.2 | 127.3 | 136.3 |
| 25 | TC | 59.6 | 57.8 | 54.2 | 50.4 | 46.4 | 42.3 |
| | kW | 4.2 | 4.5 | 5.0 | 5.6 | 6.3 | 7.0 |
| | SDT | 96.2 | 100.9 | 110.1 | 119.2 | 128.3 | 137.2 |
| 30 | TC | 65.5 | 63.5 | 59.5 | 55.4 | 51.1 | 46.6 |
| | kW | 4.3 | 4.6 | 5.1 | 5.7 | 6.4 | 7.1 |
| | SDT | 97.6 | 102.1 | 111.3 | 120.4 | 129.3 | 138.1 |
| 35 | TC | 71.7 | 69.5 | 65.2 | 60.7 | 56.0 | 51.1 |
| | kW | 4.4 | 4.7 | 5.2 | 5.8 | 6.5 | 7.2 |
| | SDT | 98.9 | 103.4 | 112.5 | 121.5 | 130.4 | 139.1 |
| 40 | TC | 78.2 | 75.9 | 71.2 | 66.3 | 61.2 | 55.7 |
| | kW | 4.5 | 4.8 | 5.3 | 5.9 | 6.5 | 7.2 |
| | SDT | 100.3 | 104.8 | 113.8 | 122.7 | 131.5 | 140.0 |
| 45 | TC | 85.2 | 82.6 | 77.4 | 72.1 | 66.4 | 60.4 |
| | kW | 4.6 | 4.9 | 5.4 | 6.0 | 6.6 | 7.3 |
| | SDT | 101.8 | 106.2 | 115.1 | 123.9 | 132.6 | 141.1 |
| 50 | TC | 92.4 | 89.6 | 83.9 | 77.9 | 71.8 | 65.2 |
| | kW | 4.7 | 5.0 | 5.5 | 6.1 | 6.7 | 7.4 |
| | SDT | 103.3 | 107.6 | 116.5 | 125.2 | 133.8 | 142.1 |

**LEGEND:**

kW – Compressor Power
SDT – Saturated Discharge Temperature at Compressor
SST – Saturated Suction Temperature
TC – Gross Cooling Capacity (1000 Btuh)

## 38AUD25 Total Unit — CONDENSER ONLY RATINGS — SI

| SST (°C) | | Air Temperature entering Condenser (°C) | | | | | |
|---|---|---|---|---|---|---|---|
| | | 27 | 29 | 35 | 41 | 46 | 52 |
| -7 | TC | 38.7 | 39.4 | 37.0 | 34.2 | 30.9 | 27.2 |
| | kW | 3.6 | 3.9 | 4.4 | 5.0 | 5.7 | 6.3 |
| | SDT | 33.8 | 36.4 | 41.6 | 46.7 | 51.9 | 57.0 |
| -4 | TC | 42.8 | 39.4 | 37.0 | 34.2 | 30.9 | 27.2 |
| | kW | 3.6 | 3.9 | 4.4 | 5.0 | 5.7 | 6.3 |
| | SDT | 34.5 | 37.1 | 42.2 | 47.4 | 52.5 | 57.5 |
| -1 | TC | 47.2 | 39.4 | 37.0 | 34.2 | 30.9 | 27.2 |
| | kW | 3.6 | 3.9 | 4.4 | 5.0 | 5.7 | 6.3 |
| | SDT | 35.2 | 37.8 | 42.9 | 48.0 | 53.1 | 58.1 |
| 2 | TC | 52.0 | 39.4 | 37.0 | 34.2 | 30.9 | 27.2 |
| | kW | 3.6 | 3.9 | 4.4 | 5.0 | 5.7 | 6.3 |
| | SDT | 36.0 | 38.6 | 43.6 | 48.7 | 53.7 | 58.6 |
| 4 | TC | 57.1 | 39.4 | 37.0 | 34.2 | 30.9 | 27.2 |
| | kW | 3.6 | 3.9 | 4.4 | 5.0 | 5.7 | 6.3 |
| | SDT | 36.9 | 39.4 | 44.4 | 49.4 | 54.4 | 59.2 |
| 7 | TC | 62.6 | 39.4 | 37.0 | 34.2 | 30.9 | 27.2 |
| | kW | 3.6 | 3.9 | 4.4 | 5.0 | 5.7 | 6.3 |
| | SDT | 37.8 | 40.3 | 45.2 | 50.2 | 55.1 | 59.8 |
| 10 | TC | 68.4 | 39.4 | 37.0 | 34.2 | 30.9 | 27.2 |
| | kW | 3.6 | 3.9 | 4.4 | 5.0 | 5.7 | 6.3 |
| | SDT | 38.8 | 41.2 | 46.1 | 51.0 | 55.8 | 60.5 |

## 38AUD25 Total Unit — CONDENSER ONLY RATINGS — ENGLISH

| SST (°F) | | Air Temperature entering Condenser (°F) | | | | | |
|---|---|---|---|---|---|---|---|
| | | 80 | 85 | 95 | 105 | 115 | 125 |
| 20 | TC | 131.9 | 128.0 | 119.8 | 111.1 | 101.6 | 91.4 |
| | kW | 10.0 | 10.6 | 12.0 | 13.5 | 15.2 | 17.2 |
| | SDT | 92.8 | 97.5 | 106.9 | 116.1 | 125.4 | 134.6 |
| 25 | TC | 145.9 | 141.7 | 132.9 | 123.5 | 113.3 | 102.3 |
| | kW | 10.2 | 10.8 | 12.1 | 13.6 | 15.4 | 17.3 |
| | SDT | 94.1 | 98.7 | 108.0 | 117.3 | 126.4 | 135.5 |
| 30 | TC | 161.1 | 156.5 | 146.9 | 136.7 | 125.6 | 113.7 |
| | kW | 10.4 | 11.0 | 12.3 | 13.8 | 15.5 | 17.5 |
| | SDT | 95.4 | 100.0 | 109.2 | 118.4 | 127.5 | 136.5 |
| 35 | TC | 177.3 | 172.3 | 161.9 | 150.7 | 138.7 | 125.7 |
| | kW | 10.6 | 11.2 | 12.5 | 14.0 | 15.7 | 17.6 |
| | SDT | 96.9 | 101.4 | 110.5 | 119.6 | 128.7 | 137.6 |
| 40 | TC | 194.8 | 189.3 | 177.9 | 165.7 | 152.5 | 138.4 |
| | kW | 10.8 | 11.4 | 12.7 | 14.2 | 15.9 | 17.8 |
| | SDT | 98.4 | 102.9 | 111.9 | 120.9 | 129.8 | 138.6 |
| 45 | TC | 213.5 | 207.4 | 194.9 | 181.5 | 167.1 | 151.7 |
| | kW | 11.1 | 11.7 | 13.0 | 14.5 | 16.1 | 18.0 |
| | SDT | 100.0 | 104.5 | 113.4 | 122.3 | 131.1 | 139.7 |
| 50 | TC | 233.4 | 226.7 | 213.0 | 198.2 | 182.5 | 165.6 |
| | kW | 11.4 | 12.0 | 13.3 | 14.7 | 16.4 | 18.2 |
| | SDT | 101.8 | 106.2 | 115.0 | 123.7 | 132.4 | 140.9 |

**LEGEND:**

kW – Compressor Power
SDT – Saturated Discharge Temperature at Compressor
SST – Saturated Suction Temperature
TC – Gross Cooling Capacity (1000 Btuh)

# PERFORMANCE DATA (cont.)

## 38AUD25 Circuit A 50 Hz CONDENSER ONLY RATINGS SI

| SST (°C) | | Air Temperature entering Condenser (°C) | | | | | |
|---|---|---|---|---|---|---|---|
| | | 27 | 29 | 35 | 41 | 46 | 52 |
| -7 | TC | 19.3 | 39.4 | 37.0 | 34.2 | 30.9 | 27.2 |
| | kW | 3.6 | 3.9 | 4.4 | 5.0 | 5.7 | 6.3 |
| | SDT | 33.6 | 36.2 | 41.4 | 46.6 | 51.7 | 56.8 |
| -4 | TC | 21.4 | 39.4 | 37.0 | 34.2 | 30.9 | 27.2 |
| | kW | 3.6 | 3.9 | 4.4 | 5.0 | 5.7 | 6.3 |
| | SDT | 34.3 | 36.8 | 42.0 | 47.2 | 52.3 | 57.3 |
| -1 | TC | 23.6 | 39.4 | 37.0 | 34.2 | 30.9 | 27.2 |
| | kW | 3.6 | 3.9 | 4.4 | 5.0 | 5.7 | 6.3 |
| | SDT | 35.0 | 37.5 | 42.7 | 47.8 | 52.9 | 57.9 |
| 2 | TC | 26.0 | 39.4 | 37.0 | 34.2 | 30.9 | 27.2 |
| | kW | 3.6 | 3.9 | 4.4 | 5.0 | 5.7 | 6.3 |
| | SDT | 35.8 | 38.3 | 43.4 | 48.5 | 53.5 | 58.4 |
| 4 | TC | 28.6 | 39.4 | 37.0 | 34.2 | 30.9 | 27.2 |
| | kW | 3.6 | 3.9 | 4.4 | 5.0 | 5.7 | 6.3 |
| | SDT | 36.6 | 39.1 | 44.1 | 49.2 | 54.1 | 59.0 |
| 7 | TC | 31.3 | 39.4 | 37.0 | 34.2 | 30.9 | 27.2 |
| | kW | 3.6 | 3.9 | 4.4 | 5.0 | 5.7 | 6.3 |
| | SDT | 37.5 | 40.0 | 44.9 | 49.9 | 54.8 | 59.6 |
| 10 | TC | 34.3 | 39.4 | 37.0 | 34.2 | 30.9 | 27.2 |
| | kW | 3.6 | 3.9 | 4.4 | 5.0 | 5.7 | 6.3 |
| | SDT | 38.4 | 40.9 | 45.8 | 50.7 | 55.5 | 60.3 |

## 38AUD25 Circuit A 50 Hz CONDENSER ONLY RATINGS ENGLISH

| SST (°F) | | Air Temperature entering Condenser (°F) | | | | | |
|---|---|---|---|---|---|---|---|
| | | 80 | 85 | 95 | 105 | 115 | 125 |
| 20 | TC | 66.0 | 64.0 | 60.0 | 55.6 | 50.9 | 45.8 |
| | kW | 5.0 | 5.3 | 5.9 | 6.7 | 7.6 | 8.5 |
| | SDT | 92.4 | 97.1 | 106.5 | 115.8 | 125.1 | 134.3 |
| 25 | TC | 73.0 | 70.9 | 66.5 | 61.8 | 56.7 | 51.2 |
| | kW | 5.1 | 5.4 | 6.0 | 6.8 | 7.6 | 8.6 |
| | SDT | 93.7 | 98.3 | 107.6 | 116.9 | 126.1 | 135.2 |
| 30 | TC | 80.6 | 78.3 | 73.5 | 68.4 | 62.9 | 57.0 |
| | kW | 5.2 | 5.5 | 6.1 | 6.9 | 7.7 | 8.7 |
| | SDT | 95.0 | 99.6 | 108.8 | 118.0 | 127.1 | 136.2 |
| 35 | TC | 88.8 | 86.2 | 81.1 | 75.5 | 69.5 | 63.0 |
| | kW | 5.3 | 5.6 | 6.2 | 7.0 | 7.8 | 8.8 |
| | SDT | 96.4 | 100.9 | 110.1 | 119.2 | 128.3 | 137.2 |
| 40 | TC | 97.5 | 94.8 | 89.1 | 83.0 | 76.4 | 69.4 |
| | kW | 5.4 | 5.7 | 6.3 | 7.1 | 7.9 | 8.9 |
| | SDT | 97.9 | 102.4 | 111.4 | 120.5 | 129.4 | 138.2 |
| 45 | TC | 106.9 | 103.9 | 97.6 | 91.0 | 83.8 | 76.0 |
| | kW | 5.5 | 5.8 | 6.5 | 7.2 | 8.0 | 9.0 |
| | SDT | 99.5 | 104.0 | 112.9 | 121.8 | 130.6 | 139.3 |
| 50 | TC | 116.9 | 113.6 | 106.7 | 99.4 | 91.5 | 83.0 |
| | kW | 5.7 | 6.0 | 6.6 | 7.3 | 8.1 | 9.1 |
| | SDT | 101.2 | 105.6 | 114.4 | 123.2 | 131.9 | 140.5 |

**LEGEND:**

kW – Compressor Power
SDT – Saturated Discharge Temperature at Compressor
SST – Saturated Suction Temperature
TC – Gross Cooling Capacity (1000 Btuh)

## 38AUD25 Circuit B 50 Hz CONDENSER ONLY RATINGS SI

| SST (°C) | | Air Temperature entering Condenser (°C) | | | | | |
|---|---|---|---|---|---|---|---|
| | | 27 | 29 | 35 | 41 | 46 | 52 |
| -7 | TC | 19.3 | 39.4 | 37.0 | 34.2 | 30.9 | 27.2 |
| | kW | 3.6 | 3.9 | 4.4 | 5.0 | 5.7 | 6.3 |
| | SDT | 34.0 | 36.6 | 41.8 | 46.9 | 52.1 | 57.2 |
| -4 | TC | 21.4 | 39.4 | 37.0 | 34.2 | 30.9 | 27.2 |
| | kW | 3.6 | 3.9 | 4.4 | 5.0 | 5.7 | 6.3 |
| | SDT | 34.7 | 37.3 | 42.4 | 47.6 | 52.7 | 57.7 |
| -1 | TC | 23.6 | 39.4 | 37.0 | 34.2 | 30.9 | 27.2 |
| | kW | 3.6 | 3.9 | 4.4 | 5.0 | 5.7 | 6.3 |
| | SDT | 35.5 | 38.0 | 43.1 | 48.2 | 53.3 | 58.3 |
| 2 | TC | 26.0 | 39.4 | 37.0 | 34.2 | 30.9 | 27.2 |
| | kW | 3.6 | 3.9 | 4.4 | 5.0 | 5.7 | 6.3 |
| | SDT | 36.3 | 38.8 | 43.9 | 48.9 | 53.9 | 58.8 |
| 4 | TC | 28.5 | 39.4 | 37.0 | 34.2 | 30.9 | 27.2 |
| | kW | 3.6 | 3.9 | 4.4 | 5.0 | 5.7 | 6.3 |
| | SDT | 37.2 | 39.7 | 44.7 | 49.7 | 54.6 | 59.4 |
| 7 | TC | 31.2 | 39.4 | 37.0 | 34.2 | 30.9 | 27.2 |
| | kW | 3.6 | 3.9 | 4.4 | 5.0 | 5.7 | 6.3 |
| | SDT | 38.1 | 40.6 | 45.5 | 50.4 | 55.3 | 60.1 |
| 10 | TC | 34.1 | 39.4 | 37.0 | 34.2 | 30.9 | 27.2 |
| | kW | 3.6 | 3.9 | 4.4 | 5.0 | 5.7 | 6.3 |
| | SDT | 39.1 | 41.5 | 46.4 | 51.2 | 56.0 | 60.7 |

## 38AUD25 Circuit B 50 Hz CONDENSER ONLY RATINGS ENGLISH

| SST (°F) | | Air Temperature entering Condenser (°F) | | | | | |
|---|---|---|---|---|---|---|---|
| | | 80 | 85 | 95 | 105 | 115 | 125 |
| 20 | TC | 65.9 | 63.9 | 59.9 | 55.5 | 50.7 | 45.6 |
| | kW | 5.0 | 5.3 | 6.0 | 6.8 | 7.6 | 8.6 |
| | SDT | 93.3 | 97.9 | 107.2 | 116.5 | 125.8 | 134.9 |
| 25 | TC | 72.9 | 70.8 | 66.4 | 61.7 | 56.6 | 51.0 |
| | kW | 5.1 | 5.4 | 6.1 | 6.8 | 7.7 | 8.7 |
| | SDT | 94.5 | 99.2 | 108.4 | 117.6 | 126.8 | 135.9 |
| 30 | TC | 80.5 | 78.2 | 73.4 | 68.2 | 62.7 | 56.7 |
| | kW | 5.2 | 5.5 | 6.2 | 6.9 | 7.8 | 8.8 |
| | SDT | 95.9 | 100.5 | 109.6 | 118.8 | 127.9 | 136.9 |
| 35 | TC | 88.6 | 86.0 | 80.8 | 75.2 | 69.2 | 62.7 |
| | kW | 5.3 | 5.6 | 6.3 | 7.0 | 7.9 | 8.9 |
| | SDT | 97.4 | 101.9 | 111.0 | 120.1 | 129.0 | 137.9 |
| 40 | TC | 97.3 | 94.5 | 88.8 | 82.7 | 76.1 | 69.0 |
| | kW | 5.4 | 5.7 | 6.4 | 7.1 | 8.0 | 8.9 |
| | SDT | 98.9 | 103.4 | 112.4 | 121.4 | 130.3 | 139.0 |
| 45 | TC | 106.6 | 103.5 | 97.2 | 90.5 | 83.3 | 75.6 |
| | kW | 5.6 | 5.9 | 6.5 | 7.3 | 8.1 | 9.0 |
| | SDT | 100.6 | 105.0 | 113.9 | 122.8 | 131.5 | 140.1 |
| 50 | TC | 116.5 | 113.1 | 106.2 | 98.8 | 91.0 | 82.5 |
| | kW | 5.7 | 6.0 | 6.7 | 7.4 | 8.2 | 9.2 |
| | SDT | 102.4 | 106.8 | 115.5 | 124.2 | 132.9 | 141.3 |

**LEGEND:**
kW – Compressor Power
SDT – Saturated Discharge Temperature at Compressor
SST – Saturated Suction Temperature
TC – Gross Cooling Capacity (1000 Btuh)

# PERFORMANCE DATA (cont.)

## 38AUZ07 - 40RUA07 COMBINATION RATINGS SI

| | | | | Ambient Temperature | | | | | | | | | | | | | | |
|---|---|---|---|---|---|---|---|---|---|---|---|---|---|---|---|---|---|---|
| | | | | 29.4 | | | 35.0 | | | 40.6 | | | 46.1 | | | 51.7 | | |
| | | | | EAT (db) | | | EAT (db) | | | EAT (db) | | | EAT (db) | | | EAT (db) | | |
| | | | | 23.9 | 26.7 | 29.4 | 23.9 | 26.7 | 29.4 | 23.9 | 26.7 | 29.4 | 23.9 | 26.7 | 29.4 | 23.9 | 26.7 | 29.4 |
| 850 L/S | EAT (wb) | 14.4 | THC | 17.2 | 17.2 | 19.3 | 16.6 | 16.6 | 18.8 | 16.0 | 16.0 | 18.1 | 15.4 | 15.4 | 17.4 | 14.5 | 14.5 | 16.4 |
| | | | SHC | 15.0 | 17.2 | 19.3 | 14.5 | 16.6 | 18.8 | 14.0 | 16.0 | 18.1 | 13.5 | 15.4 | 17.4 | 12.7 | 14.5 | 16.4 |
| | | | kW | | 3.6 | | | 4.3 | | | 4.9 | | | 5.7 | | | 6.5 | |
| | | 16.7 | THC | 17.5 | 17.5 | 19.2 | 16.9 | 16.9 | 18.8 | 16.2 | 16.2 | 18.4 | 15.5 | 15.5 | 17.9 | 14.6 | 14.6 | 17.1 |
| | | | SHC | 13.8 | 16.5 | 19.2 | 13.5 | 16.2 | 18.8 | 13.2 | 15.8 | 18.4 | 12.8 | 15.4 | 17.9 | 12.2 | 14.6 | 17.1 |
| | | | kW | | 3.6 | | | 4.2 | | | 4.9 | | | 5.7 | | | 6.5 | |
| | | 19.4 | THC | 18.9 | 18.9 | 18.9 | 18.3 | 18.3 | 18.3 | 17.5 | 17.5 | 17.5 | 16.7 | 16.7 | 16.7 | 15.8 | 15.8 | 15.8 |
| | | | SHC | 11.2 | 13.9 | 16.6 | 10.9 | 13.6 | 16.3 | 10.6 | 13.3 | 16.0 | 10.3 | 13.0 | 15.7 | 9.9 | 12.6 | 15.3 |
| | | | kW | | 3.6 | | | 4.2 | | | 4.9 | | 5.7 | | | | 6.5 | |
| | | 22.2 | THC | 20.6 | 20.6 | 20.6 | 19.9 | 19.9 | 19.9 | 19.1 | 19.1 | 19.1 | 18.3 | 18.3 | 18.3 | 17.3 | 17.3 | 17.3 |
| | | | SHC | 8.4 | 11.2 | 13.9 | 8.2 | 10.9 | 13.6 | 7.9 | 10.6 | 13.3 | 7.6 | 10.3 | 13.0 | 7.2 | 9.9 | 12.7 |
| | | | kW | | 3.5 | | | 4.1 | | | 4.8 | | | 5.6 | | | 6.5 | |
| | | 24.4 | THC | – | 22.0 | 22.0 | – | 21.3 | 21.3 | – | 20.5 | 20.5 | – | 19.6 | 19.6 | – | – | – |
| | | | SHC | – | 9.0 | 11.8 | – | 8.7 | 11.5 | – | 8.4 | 11.2 | – | 8.1 | 10.9 | – | – | – |
| | | | kW | | 3.5 | | | 4.1 | | | 4.8 | | | 5.6 | | | – | |
| 991 L/S | EAT (wb) | 14.4 | THC | 17.9 | 17.9 | 20.2 | 17.4 | 17.4 | 19.5 | 16.7 | 16.7 | 18.8 | 16.1 | 16.1 | 18.1 | 15.3 | 15.3 | 17.3 |
| | | | SHC | 15.6 | 17.9 | 20.2 | 15.2 | 17.4 | 19.5 | 14.6 | 16.7 | 18.8 | 14.0 | 16.1 | 18.1 | 13.4 | 15.3 | 17.3 |
| | | | kW | | 3.6 | | | 4.2 | | | 4.9 | | | 5.7 | | | 6.5 | |
| | | 16.7 | THC | 18.0 | 18.0 | 20.6 | 17.4 | 17.4 | 20.3 | 16.7 | 16.7 | 19.6 | 16.1 | 16.1 | 18.8 | 15.3 | 15.3 | 17.9 |
| | | | SHC | 14.7 | 17.7 | 20.6 | 14.4 | 17.4 | 20.3 | 13.9 | 16.7 | 19.6 | 13.4 | 16.1 | 18.8 | 12.7 | 15.3 | 17.9 |
| | | | kW | | 3.6 | | | 4.2 | | | 4.9 | | | 5.7 | | | 6.5 | |
| | | 19.4 | THC | 19.3 | 19.3 | 19.3 | 18.6 | 18.6 | 18.6 | 17.8 | 17.8 | 17.8 | 17.0 | 17.0 | 17.1 | 16.1 | 16.1 | 16.7 |
| | | | SHC | 11.8 | 14.9 | 18.0 | 11.5 | 14.6 | 17.7 | 11.3 | 14.3 | 17.4 | 10.9 | 14.0 | 17.1 | 10.6 | 13.6 | 16.7 |
| | | | kW | | 3.6 | | | 4.2 | | | 4.9 | | | 5.6 | | | 6.5 | |
| | | 22.2 | THC | 21.0 | 21.0 | 21.0 | 20.3 | 20.3 | 20.3 | 19.5 | 19.5 | 19.5 | 18.6 | 18.6 | 18.6 | 17.6 | 17.6 | 17.6 |
| | | | SHC | 8.7 | 11.8 | 14.9 | 8.4 | 11.5 | 14.6 | 8.2 | 11.3 | 14.3 | 7.9 | 10.9 | 14.0 | 7.5 | 10.6 | 13.7 |
| | | | kW | | 3.5 | | | 4.1 | | | 4.8 | | | 5.6 | | | 6.4 | |
| | | 24.4 | THC | – | 22.4 | 22.4 | – | 21.7 | 21.7 | – | 20.8 | 20.8 | – | – | – | – | – | – |
| | | | SHC | – | 9.3 | 12.5 | – | 9.1 | 12.3 | – | 8.8 | 12.0 | – | – | – | – | – | – |
| | | | kW | | 3.4 | | | 4.1 | | | 4.8 | | | – | | | – | |
| 1133 L/S | EAT (wb) | 14.4 | THC | 18.5 | 18.5 | 20.8 | 17.9 | 17.9 | 20.2 | 17.3 | 17.3 | 19.5 | 16.6 | 16.6 | 18.7 | 15.8 | 15.8 | 17.8 |
| | | | SHC | 16.1 | 18.5 | 20.8 | 15.7 | 17.9 | 20.2 | 15.1 | 17.3 | 19.5 | 14.5 | 16.6 | 18.7 | 13.8 | 15.8 | 17.8 |
| | | | kW | | 3.6 | | | 4.2 | | | 4.9 | | | 5.7 | | | 6.5 | |
| | | 16.7 | THC | 18.5 | 18.5 | 21.7 | 17.9 | 17.9 | 21.0 | 17.3 | 17.3 | 20.2 | 16.6 | 16.6 | 19.4 | 15.8 | 15.8 | 18.5 |
| | | | SHC | 15.4 | 18.5 | 21.7 | 14.9 | 17.9 | 21.0 | 14.4 | 17.3 | 20.2 | 13.8 | 16.6 | 19.4 | 13.2 | 15.8 | 18.5 |
| | | | kW | | 3.6 | | | 4.2 | | | 4.9 | | | 5.7 | | | 6.5 | |
| | | 19.4 | THC | 19.6 | 19.6 | 19.6 | 18.9 | 18.9 | 19.0 | 18.1 | 18.1 | 18.7 | 17.3 | 17.3 | 18.3 | 16.3 | 16.3 | 17.9 |
| | | | SHC | 12.4 | 15.9 | 19.3 | 12.1 | 15.6 | 19.0 | 11.8 | 15.3 | 18.7 | 11.5 | 14.9 | 18.3 | 11.1 | 14.5 | 17.9 |
| | | | kW | | 3.5 | | | 4.2 | | | 4.9 | | | 5.6 | | | 6.5 | |
| | | 22.2 | THC | 21.2 | 21.2 | 21.2 | 20.5 | 20.5 | 20.5 | 19.7 | 19.7 | 19.7 | 18.8 | 18.8 | 18.8 | 17.8 | 17.8 | 17.8 |
| | | | SHC | 8.9 | 12.4 | 15.9 | 8.7 | 12.1 | 15.6 | 8.4 | 11.8 | 15.3 | 8.1 | 11.5 | 14.9 | 7.7 | 11.2 | 14.6 |
| | | | kW | | 3.5 | | | 4.1 | | | 4.8 | | | 5.6 | | | 6.4 | |
| | | 24.4 | THC | – | 22.7 | 22.7 | – | 21.9 | 21.9 | – | 21.1 | 21.1 | – | – | – | – | – | – |
| | | | SHC | – | 9.6 | 13.2 | – | 9.4 | 12.9 | – | 9.1 | 12.6 | – | – | – | – | – | – |
| | | | kW | | 3.4 | | | 4.1 | | | 4.8 | | | – | | | – | |
| 1274 L/S | EAT (wb) | 14.4 | THC | 19.0 | 19.0 | 21.4 | 18.4 | 18.4 | 20.7 | 17.7 | 17.7 | 20.0 | 17.0 | 17.0 | 19.2 | 16.2 | 16.2 | 18.3 |
| | | | SHC | 16.6 | 19.0 | 21.4 | 16.0 | 18.4 | 20.7 | 15.5 | 17.7 | 20.0 | 14.9 | 17.0 | 19.2 | 14.2 | 16.2 | 18.3 |
| | | | kW | 3.6 | | | 4.2 | | | 4.9 | | | 5.6 | | | 6.5 | | |
| | | 16.7 | THC | 19.0 | 19.0 | 22.2 | 18.4 | 18.4 | 21.5 | 17.7 | 17.7 | 20.8 | 17.0 | 17.0 | 19.9 | 16.2 | 16.2 | 19.0 |
| | | | SHC | 15.8 | 19.0 | 22.2 | 15.3 | 18.4 | 21.5 | 14.7 | 17.7 | 20.8 | 14.1 | 17.0 | 19.9 | 13.5 | 16.2 | 19.0 |
| | | | kW | 3.6 | | | 4.2 | | | 4.9 | | | 5.6 | | | 6.5 | | |
| | | 19.4 | THC | 19.8 | 19.8 | 20.5 | 19.1 | 19.1 | 20.2 | 18.3 | 18.3 | 19.9 | 17.5 | 17.5 | 19.5 | 16.5 | 16.5 | 19.1 |
| | | | SHC | 13.0 | 16.8 | 20.5 | 12.7 | 16.5 | 20.2 | 12.4 | 16.1 | 19.9 | 12.0 | 15.8 | 19.5 | 11.6 | 15.4 | 19.1 |
| | | | kW | 3.5 | | | 4.2 | | | 4.8 | | | 5.6 | | | 6.5 | | |
| | | 22.2 | THC | 21.5 | 21.5 | 21.5 | 20.8 | 20.8 | 20.8 | 19.9 | 19.9 | 19.9 | 19.0 | 19.0 | 19.0 | – | – | – |
| | | | SHC | 9.2 | 13.0 | 16.8 | 8.9 | 12.7 | 16.5 | 8.6 | 12.4 | 16.2 | 8.3 | 12.1 | 15.9 | – | – | – |
| | | | kW | 3.5 | | | 4.1 | | | 4.8 | | | 5.6 | | | – | | |
| | | 24.4 | THC | – | 22.9 | 22.9 | – | 22.2 | 22.2 | – | 21.3 | 21.3 | – | – | – | – | – | – |
| | | | SHC | – | 9.9 | 13.8 | – | 9.7 | 13.5 | – | 9.4 | 13.2 | – | – | – | – | – | – |
| | | | kW | | 3.4 | | | 4.1 | | | 4.8 | | | – | | | – | |
| 1416 L/S | EAT (wb) | 14.4 | THC | 19.4 | 19.4 | 21.9 | 18.8 | 18.8 | 21.2 | 18.1 | 18.1 | 20.4 | 17.4 | 17.4 | 19.6 | 16.6 | 16.6 | 18.6 |
| | | | SHC | 16.9 | 19.4 | 21.9 | 16.4 | 18.8 | 21.2 | 15.8 | 18.1 | 20.4 | 15.2 | 17.4 | 19.6 | 14.4 | 16.6 | 18.6 |
| | | | kW | | 3.5 | | | 4.2 | | | 4.9 | | | 5.6 | | | 6.5 | |
| | | 16.7 | THC | 19.4 | 19.4 | 22.7 | 18.8 | 18.8 | 22.0 | 18.1 | 18.1 | 21.2 | 17.4 | 17.4 | 20.3 | 16.6 | 16.6 | 19.4 |
| | | | SHC | 16.1 | 19.4 | 22.7 | 15.6 | 18.8 | 22.0 | 15.1 | 18.1 | 21.2 | 14.4 | 17.4 | 20.3 | 13.7 | 16.6 | 19.4 |
| | | | kW | | 3.5 | | | 4.2 | | 4.8 | | | 5.6 | | | 6.5 | | |
| | | 19.4 | THC | 20.0 | 20.0 | 21.7 | 19.3 | 19.3 | 21.4 | 18.5 | 18.5 | 21.0 | 17.6 | 17.6 | 20.6 | 16.7 | 16.7 | 20.1 |
| | | | SHC | 13.5 | 17.6 | 21.7 | 13.2 | 17.3 | 21.4 | 12.9 | 17.0 | 21.0 | 12.5 | 16.6 | 20.6 | 12.1 | 16.1 | 20.1 |
| | | | kW | | 3.5 | | | 4.1 | | 4.8 | | | 5.6 | | | | 6.5 | |
| | | 22.2 | THC | 21.7 | 21.7 | 21.7 | 20.9 | 20.9 | 20.9 | 20.1 | 20.1 | 20.1 | 19.1 | 19.1 | 19.1 | – | – | – |
| | | | SHC | 9.4 | 13.5 | 17.6 | 9.1 | 13.2 | 17.4 | 8.8 | 12.9 | 17.1 | 8.5 | 12.6 | 16.7 | – | – | – |
| | | | kW | | 3.5 | | | 4.1 | | | 4.8 | | | 5.6 | | | – | |
| | | 24.4 | THC | – | 23.1 | 23.1 | – | 22.3 | 22.3 | – | 21.4 | 21.4 | – | – | – | – | – | – |
| | | | SHC | – | 10.2 | 14.4 | – | 9.9 | 14.1 | – | 9.6 | 13.8 | – | – | – | – | – | – |
| | | | kW | | 3.4 | | | 4.1 | | | 4.8 | | | – | | | – | |

**LEGEND:**
– = Do not operate
L/s = Liters per second
EAT(wb) = Entering air temp (wet bulb)
kW = Compressor kilowatts
SHC = Sensible heat capacity (Gross)
THC = Total heat capacity (Gross)
EAT(db) = Entering air temp (dry bulb)
Cfm = Cubic feet per minute (supply air)

| | | | | Ambient Temperature | | | | | | | | | | | | | | |
|---|---|---|---|---|---|---|---|---|---|---|---|---|---|---|---|---|---|---|
| | | | | 85.0 | | | 95.0 | | | 105.0 | | | 115.0 | | | 125.0 | | |
| | | | | EAT (db) | | | EAT (db) | | | EAT (db) | | | EAT (db) | | | EAT (db) | | |
| | | | | 75.0 | 80.0 | 85.0 | 75.0 | 80.0 | 85.0 | 75.0 | 80.0 | 85.0 | 75.0 | 80.0 | 85.0 | 75.0 | 80.0 | 85.0 |
| 1800 cfm | EAT (wb) | 58.0 | THC | 58.6 | 58.6 | 66.0 | 56.8 | 56.8 | 64.0 | 54.7 | 54.7 | 61.7 | 52.6 | 52.6 | 59.3 | 49.6 | 49.6 | 55.9 |
| | | | SHC | 51.1 | 58.6 | 66.0 | 49.6 | 56.8 | 64.0 | 47.8 | 54.7 | 61.7 | 45.9 | 52.6 | 59.3 | 43.3 | 49.6 | 55.9 |
| | | | kW | | 3.6 | | | 4.3 | | | 4.9 | | | 5.7 | | | 6.5 | |
| | | 62.0 | THC | 59.7 | 59.7 | 65.4 | 57.5 | 57.5 | 64.2 | 55.2 | 55.2 | 62.8 | 52.8 | 52.8 | 61.2 | 49.9 | 49.9 | 58.4 |
| | | | SHC | 47.2 | 56.3 | 65.4 | 46.2 | 55.2 | 64.2 | 44.9 | 53.9 | 62.8 | 43.6 | 52.4 | 61.2 | 41.5 | 49.9 | 58.4 |
| | | | kW | | 3.6 | | | 4.2 | | | 4.9 | | | 5.7 | | | 6.5 | |
| | | 67.0 | THC | 64.6 | 64.6 | 64.6 | 62.3 | 62.3 | 62.3 | 59.7 | 59.7 | 59.7 | 57.0 | 57.0 | 57.0 | 54.0 | 54.0 | 54.0 |
| | | | SHC | 38.2 | 47.4 | 56.6 | 37.2 | 46.4 | 55.6 | 36.2 | 45.4 | 54.6 | 35.1 | 44.3 | 53.4 | 33.8 | 43.0 | 52.2 |
| | | | kW | | 3.6 | | | 4.2 | | | 4.9 | | | 5.7 | | | 6.5 | |
| | | 72.0 | THC | 70.3 | 70.3 | 70.3 | 67.9 | 67.9 | 67.9 | 65.3 | 65.3 | 65.3 | 62.3 | 62.3 | 62.3 | 59.1 | 59.1 | 59.1 |
| | | | SHC | 28.8 | 38.1 | 47.4 | 27.9 | 37.2 | 46.5 | 27.0 | 36.2 | 45.5 | 25.9 | 35.1 | 44.4 | 24.7 | 33.9 | 43.2 |
| | | | kW | | 3.5 | | | 4.1 | | | 4.8 | | | 5.6 | | | 6.5 | |
| | | 76.0 | THC | – | 75.1 | 75.1 | – | 72.7 | 72.7 | – | 69.9 | 69.9 | – | 66.8 | 66.8 | – | – | – |
| | | | SHC | – | 30.6 | 40.2 | – | 29.8 | 39.3 | – | 28.8 | 38.3 | – | 27.7 | 37.2 | – | – | – |
| | | | kW | | 3.5 | | | 4.1 | | | 4.8 | | | 5.6 | | | – | |
| 2100 cfm | EAT (wb) | 58.0 | THC | 61.1 | 61.1 | 68.8 | 59.2 | 59.2 | 66.7 | 57.1 | 57.1 | 64.3 | 54.8 | 54.8 | 61.8 | 52.3 | 52.3 | 58.9 |
| | | | SHC | 53.3 | 61.1 | 68.8 | 51.7 | 59.2 | 66.7 | 49.8 | 57.1 | 64.3 | 47.9 | 54.8 | 61.8 | 45.6 | 52.3 | 58.9 |
| | | | kW | | 3.6 | | | 4.2 | | | 4.9 | | | 5.7 | | | 6.5 | |
| | | 62.0 | THC | 61.5 | 61.5 | 70.4 | 59.2 | 59.2 | 69.2 | 57.1 | 57.1 | 66.8 | 54.9 | 54.9 | 64.2 | 52.3 | 52.3 | 61.2 |
| | | | SHC | 50.3 | 60.3 | 70.4 | 49.2 | 59.2 | 69.2 | 47.4 | 57.1 | 66.8 | 45.6 | 54.9 | 64.2 | 43.5 | 52.3 | 61.2 |
| | | | kW | | 3.6 | | | 4.2 | | | 4.9 | | | 5.7 | | | 6.5 | |
| | | 67.0 | THC | 65.8 | 65.8 | 65.8 | 63.4 | 63.4 | 63.4 | 60.9 | 60.9 | 60.9 | 58.0 | 58.0 | 58.2 | 54.9 | 54.9 | 56.9 |
| | | | SHC | 40.4 | 50.9 | 61.4 | 39.4 | 49.9 | 60.4 | 38.4 | 48.9 | 59.3 | 37.2 | 47.7 | 58.2 | 36.0 | 46.4 | 56.9 |
| | | | kW | | 3.6 | | | 4.2 | | | 4.9 | | | 5.6 | | | 6.5 | |
| | | 72.0 | THC | 71.6 | 71.6 | 71.6 | 69.1 | 69.1 | 69.1 | 66.4 | 66.4 | 66.4 | 63.4 | 63.4 | 63.4 | 60.1 | 60.1 | 60.1 |
| | | | SHC | 29.7 | 40.3 | 50.9 | 28.8 | 39.4 | 49.9 | 27.9 | 38.4 | 48.9 | 26.8 | 37.3 | 47.8 | 25.6 | 36.1 | 46.6 |
| | | | kW | | 3.5 | | | 4.1 | | | 4.8 | | | 5.6 | | | 6.4 | |
| | | 76.0 | THC | – | 76.4 | 76.4 | – | 73.9 | 73.9 | – | 71.0 | 71.0 | – | – | – | – | – | – |
| | | | SHC | – | 31.8 | 42.6 | – | 30.9 | 41.8 | – | 29.9 | 40.8 | – | – | – | – | – | – |
| | | | kW | | 3.4 | | | 4.1 | | | 4.8 | | | – | | | – | |
| 2400 cfm | EAT (wb) | 58.0 | THC | 63.1 | 63.1 | 71.1 | 61.1 | 61.1 | 68.9 | 58.9 | 58.9 | 66.4 | 56.6 | 56.6 | 63.8 | 54.0 | 54.0 | 60.9 |
| | | | SHC | 55.1 | 63.1 | 71.1 | 53.4 | 61.1 | 68.9 | 51.5 | 58.9 | 66.4 | 49.4 | 56.6 | 63.8 | 47.1 | 54.0 | 60.9 |
| | | | kW | | 3.6 | | | 4.2 | | | 4.9 | | | 5.7 | | | 6.5 | |
| | | 62.0 | THC | 63.2 | 63.2 | 73.9 | 61.2 | 61.2 | 71.5 | 59.0 | 59.0 | 68.9 | 56.6 | 56.6 | 66.2 | 54.0 | 54.0 | 63.2 |
| | | | SHC | 52.5 | 63.2 | 73.9 | 50.8 | 61.2 | 71.5 | 49.0 | 59.0 | 68.9 | 47.0 | 56.6 | 66.2 | 44.9 | 54.0 | 63.2 |
| | | | kW | | 3.6 | | | 4.2 | | | 4.9 | | | 5.7 | | | 6.5 | |
| | | 67.0 | THC | 66.8 | 66.8 | 66.8 | 64.4 | 64.4 | 64.9 | 61.8 | 61.8 | 63.8 | 58.9 | 58.9 | 62.5 | 55.7 | 55.7 | 61.1 |
| | | | SHC | 42.4 | 54.2 | 65.9 | 41.4 | 53.2 | 64.9 | 40.4 | 52.1 | 63.8 | 39.2 | 50.9 | 62.5 | 37.9 | 49.5 | 61.1 |
| | | | kW | | 3.5 | | | 4.2 | | | 4.9 | | | 5.6 | | | 6.5 | |
| | | 72.0 | THC | 72.5 | 72.5 | 72.5 | 70.1 | 70.1 | 70.1 | 67.3 | 67.3 | 67.3 | 64.2 | 64.2 | 64.2 | 60.7 | 60.7 | 60.7 |
| | | | SHC | 30.5 | 42.3 | 54.1 | 29.7 | 41.4 | 53.2 | 28.7 | 40.4 | 52.2 | 27.6 | 39.3 | 51.0 | 26.4 | 38.1 | 49.7 |
| | | | kW | | 3.5 | | 4.1 | | | 4.8 | | | | 5.6 | | | 6.4 | |
| | | 76.0 | THC | – | 77.4 | 77.4 | – | 74.8 | 74.8 | – | 71.9 | 71.9 | – | – | – | – | – | – |
| | | | SHC | – | 32.8 | 44.9 | – | 32.0 | 44.0 | – | 31.0 | 43.0 | – | – | – | – | – | – |
| | | | kW | | 3.4 | | | 4.1 | | | 4.8 | | | – | | | – | |
| 2700 cfm | EAT (wb) | 58.0 | THC | 64.8 | 64.8 | 73.0 | 62.7 | 62.7 | 70.7 | 60.5 | 60.5 | 68.2 | 58.0 | 58.0 | 65.4 | 55.4 | 55.4 | 62.4 |
| | | | SHC | 56.6 | 64.8 | 73.0 | 54.7 | 62.7 | 70.7 | 52.8 | 60.5 | 68.2 | 50.7 | 58.0 | 65.4 | 48.3 | 55.4 | 62.4 |
| | | | kW | | 3.6 | | | 4.2 | | | 4.9 | | | 5.6 | | | 6.5 | |
| | | 62.0 | THC | 64.8 | 64.8 | 75.8 | 62.7 | 62.7 | 73.4 | 60.5 | 60.5 | 70.8 | 58.1 | 58.1 | 67.9 | 55.4 | 55.4 | 64.8 |
| | | | SHC | 53.9 | 64.8 | 75.8 | 52.1 | 62.7 | 73.4 | 50.3 | 60.5 | 70.8 | 48.2 | 58.1 | 67.9 | 46.0 | 55.4 | 64.8 |
| | | | kW | | 3.6 | | | 4.2 | | | 4.9 | | | 5.6 | | | 6.5 | |
| | | 67.0 | THC | 67.6 | 67.6 | 70.1 | 65.1 | 65.1 | 69.0 | 62.5 | 62.5 | 67.9 | 59.6 | 59.6 | 66.6 | 56.4 | 56.4 | 65.1 |
| | | | SHC | 44.3 | 57.2 | 70.1 | 43.3 | 56.2 | 69.0 | 42.3 | 55.1 | 67.9 | 41.1 | 53.8 | 66.6 | 39.7 | 52.4 | 65.1 |
| | | | kW | | 3.5 | | | 4.2 | | | 4.8 | | | 5.6 | | | 6.5 | |
| | | 72.0 | THC | 73.3 | 73.3 | 73.3 | 70.8 | 70.8 | 70.8 | 67.9 | 67.9 | 67.9 | 64.8 | 64.8 | 64.8 | – | – | – |
| | | | SHC | 31.3 | 44.3 | 57.2 | 30.4 | 43.3 | 56.3 | 29.4 | 42.3 | 55.2 | 28.3 | 41.2 | 54.1 | – | – | – |
| | | | kW | | 3.5 | | | 4.1 | | | 4.8 | | | 5.6 | | | – | |
| | | 76.0 | THC | – | 78.2 | 78.2 | – | 75.6 | 75.6 | – | 72.6 | 72.6 | – | – | – | – | – | – |
| | | | SHC | – | 33.9 | 47.1 | – | 33.0 | 46.2 | – | 32.0 | 45.2 | – | – | – | – | – | – |
| | | | kW | | 3.4 | | | 4.1 | | | 4.8 | | | – | | | – | |
| 3000 cfm | EAT (wb) | 58.0 | THC | 66.2 | 66.2 | 74.6 | 64.1 | 64.1 | 72.2 | 61.8 | 61.8 | 69.6 | 59.3 | 59.3 | 66.8 | 56.5 | 56.5 | 63.6 |
| | | | SHC | 57.8 | 66.2 | 74.6 | 55.9 | 64.1 | 72.2 | 53.9 | 61.8 | 69.6 | 51.8 | 59.3 | 66.8 | 49.3 | 56.5 | 63.6 |
| | | | kW | | 3.5 | | | 4.2 | | | 4.9 | | | 5.6 | | | 6.5 | |
| | | 62.0 | THC | 66.2 | 66.2 | 77.4 | 64.1 | 64.1 | 75.0 | 61.8 | 61.8 | 72.3 | 59.3 | 59.3 | 69.4 | 56.5 | 56.5 | 66.1 |
| | | | SHC | 55.0 | 66.2 | 77.4 | 53.3 | 64.1 | 75.0 | 51.4 | 61.8 | 72.3 | 49.3 | 59.3 | 69.4 | 46.9 | 56.5 | 66.1 |
| | | | kW | | 3.5 | | | 4.2 | | | 4.8 | | | 5.6 | | | 6.5 | |
| | | 67.0 | THC | 68.2 | 68.2 | 74.0 | 65.8 | 65.8 | 72.9 | 63.1 | 63.1 | 71.7 | 60.2 | 60.2 | 70.3 | 57.0 | 57.0 | 68.5 |
| | | | SHC | 46.1 | 60.1 | 74.0 | 45.1 | 59.0 | 72.9 | 44.0 | 57.9 | 71.7 | 42.7 | 56.5 | 70.3 | 41.3 | 54.9 | 68.5 |
| | | | kW | | 3.5 | | | 4.1 | | | 4.8 | | | 5.6 | | | 6.5 | |
| | | 72.0 | THC | 73.9 | 73.9 | 73.9 | 71.3 | 71.3 | 71.3 | 68.5 | 68.5 | 68.5 | 65.3 | 65.3 | 65.3 | – | – | – |
| | | | SHC | 32.0 | 46.1 | 60.2 | 31.1 | 45.2 | 59.2 | 30.1 | 44.1 | 58.2 | 29.0 | 43.0 | 57.0 | – | – | – |
| | | | kW | | 3.5 | | | 4.1 | | | 4.8 | | | 5.6 | | | – | |
| | | 76.0 | THC | – | 78.9 | 78.9 | – | 76.2 | 76.2 | – | 73.1 | 73.1 | – | – | – | – | – | – |
| | | | SHC | – | 34.8 | 49.2 | – | 33.9 | 48.2 | – | 32.9 | 47.2 | – | – | – | – | – | – |
| | | | kW | | 3.4 | | | 4.1 | | | 4.8 | | | – | | | – | |

**LEGEND:**
– = Do not operate
L/s = Liters per second
EAT(wb) = Entering air temp (wet bulb)
kW = Compressor kilowatts
SHC = Sensible heat capacity (Gross)
THC = Total heat capacity (Gross)
EAT(db) = Entering air temp (dry bulb)
Cfm = Cubic feet per minute (supply air)

38AU

# PERFORMANCE DATA (cont.)

**38AUZ08 - 40RUA08** **COMBINATION RATINGS** **SI**

| | | | | Ambient Temperature | | | | | | | | | | | | | | |
|---|---|---|---|---|---|---|---|---|---|---|---|---|---|---|---|---|---|---|
| | | | | 29.4 | | | 35.0 | | | 40.6 | | | 46.1 | | | 51.7 | | |
| | | | | EAT (db) | | | EAT (db) | | | EAT (db) | | | EAT (db) | | | EAT (db) | | |
| | | | | 23.9 | 26.7 | 29.4 | 23.9 | 26.7 | 29.4 | 23.9 | 26.7 | 29.4 | 23.9 | 26.7 | 29.4 | 23.9 | 26.7 | 29.4 |
| 1062 L/S | EAT (wb) | 14.4 | THC | 21.9 | 21.9 | 24.6 | 21.2 | 21.2 | 23.9 | 20.4 | 20.4 | 23.0 | 19.5 | 19.5 | 22.0 | 18.6 | 18.6 | 21.0 |
| | | | SHC | 19.1 | 21.9 | 24.6 | 18.5 | 21.2 | 23.9 | 17.8 | 20.4 | 23.0 | 17.1 | 19.5 | 22.0 | 16.2 | 18.6 | 21.0 |
| | | | Kw | | 4.6 | | | 5.4 | | | 6.2 | | | 7.2 | | | 8.2 | |
| | | 16.7 | THC | 22.5 | 22.5 | 24.3 | 21.6 | 21.6 | 23.9 | 20.7 | 20.7 | 23.3 | 19.6 | 19.6 | 22.7 | 18.6 | 18.6 | 21.7 |
| | | | SHC | 17.6 | 21.0 | 24.3 | 17.2 | 20.5 | 23.9 | 16.7 | 20.0 | 23.3 | 16.1 | 19.4 | 22.7 | 15.4 | 18.6 | 21.7 |
| | | | kW | | 4.6 | | | 5.4 | | | 6.3 | | | 7.2 | | | 8.2 | |
| | | 19.4 | THC | 24.4 | 24.4 | 24.4 | 23.5 | 23.5 | 23.5 | 22.4 | 22.4 | 22.4 | 21.3 | 21.3 | 21.3 | 20.0 | 20.0 | 20.0 |
| | | | SHC | 14.3 | 17.7 | 21.1 | 13.9 | 17.3 | 20.7 | 13.5 | 16.9 | 20.3 | 13.0 | 16.4 | 19.8 | 12.5 | 15.9 | 19.3 |
| | | | kW | | 4.7 | | | 5.5 | | | 6.3 | | | 7.2 | | | 8.2 | |
| | | 22.2 | THC | 26.5 | 26.5 | 26.5 | 25.5 | 25.5 | 25.5 | 24.4 | 24.4 | 24.4 | 23.2 | 23.2 | 23.2 | – | – | – |
| | | | SHC | 10.8 | 14.3 | 17.7 | 10.5 | 13.9 | 17.3 | 10.1 | 13.5 | 16.9 | 9.6 | 13.0 | 16.4 | – | – | – |
| | | | kW | | 4.8 | | | 5.5 | | | 6.4 | | | 7.3 | | | – | |
| | | 24.4 | THC | – | 28.3 | 28.3 | – | 27.3 | 27.3 | – | 26.1 | 26.1 | – | 24.8 | 24.8 | – | – | – |
| | | | SHC | – | 11.5 | 15.0 | – | 11.1 | 14.6 | – | 10.7 | 14.2 | – | 10.3 | 13.8 | – | – | – |
| | | | kW | | 4.8 | | | 5.6 | | | 6.4 | | | 7.4 | | | – | |
| 1239 L/S | EAT (wb) | 14.4 | THC | 22.9 | 22.9 | 25.8 | 22.1 | 22.1 | 24.9 | 21.3 | 21.3 | 24.0 | 20.4 | 20.4 | 22.9 | 19.4 | 19.4 | 21.8 |
| | | | SHC | 20.0 | 22.9 | 25.8 | 19.3 | 22.1 | 24.9 | 18.6 | 21.3 | 24.0 | 17.8 | 20.4 | 22.9 | 16.9 | 19.4 | 21.8 |
| | | | kW | | 4.6 | | | 5.4 | | | 6.3 | | | 7.2 | | | 8.2 | |
| | | 16.7 | THC | 23.1 | 23.1 | 26.4 | 22.2 | 22.2 | 25.9 | 21.3 | 21.3 | 24.9 | 20.4 | 20.4 | 23.9 | 19.4 | 19.4 | 22.7 |
| | | | SHC | 18.9 | 22.7 | 26.4 | 18.4 | 22.2 | 25.9 | 17.7 | 21.3 | 24.9 | 16.9 | 20.4 | 23.9 | 16.1 | 19.4 | 22.7 |
| | | | kW | | 4.7 | | | 5.4 | | | 6.3 | | | 7.2 | | | 8.2 | |
| | | 19.4 | THC | 24.9 | 24.9 | 24.9 | 23.9 | 23.9 | 23.9 | 22.9 | 22.9 | 22.9 | 21.7 | 21.7 | 21.7 | 20.4 | 20.4 | 21.1 |
| | | | SHC | 15.2 | 19.1 | 23.0 | 14.8 | 18.7 | 22.6 | 14.3 | 18.2 | 22.1 | 13.9 | 17.8 | 21.6 | 13.4 | 17.2 | 21.1 |
| | | | kW | | 4.7 | | | 5.5 | | | 6.3 | | | 7.2 | | | 8.2 | |
| | | 22.2 | THC | 27.1 | 27.1 | 27.1 | 26.0 | 26.0 | 26.0 | 24.9 | 24.9 | 24.9 | 23.6 | 23.6 | 23.6 | 22.2 | 22.2 | 22.2 |
| | | | SHC | 11.2 | 15.1 | 19.1 | 10.8 | 14.7 | 18.6 | 10.4 | 14.3 | 18.2 | 10.0 | 13.9 | 17.8 | 9.5 | 13.4 | 17.3 |
| | | | kW | | 4.8 | | | 5.5 | | | 6.4 | | | 7.3 | | | 8.3 | |
| | | 24.4 | THC | – | 28.9 | 28.9 | – | 27.8 | 27.8 | – | 26.6 | 26.6 | – | – | – | – | – | – |
| | | | SHC | – | 11.9 | 16.0 | – | 11.6 | 15.6 | – | 11.2 | 15.2 | | | | | | |
| | | | kW | | 4.8 | | | 5.6 | | | 6.5 | | | – | | | – | |
| 1416 L/S | EAT (wb) | 14.4 | THC | 23.7 | 23.7 | 26.7 | 22.9 | 22.9 | 25.8 | 22.0 | 22.0 | 24.8 | 21.1 | 21.1 | 23.7 | 20.0 | 20.0 | 22.5 |
| | | | SHC | 20.7 | 23.7 | 26.7 | 20.0 | 22.9 | 25.8 | 19.2 | 22.0 | 24.8 | 18.4 | 21.1 | 23.7 | 17.5 | 20.0 | 22.5 |
| | | | kW | | 4.7 | | | 5.4 | | | 6.3 | | | 7.2 | | | 8.2 | |
| | | 16.7 | THC | 23.7 | 23.7 | 27.8 | 22.9 | 22.9 | 26.8 | 22.0 | 22.0 | 25.8 | 21.1 | 21.1 | 24.6 | 20.0 | 20.0 | 23.4 |
| | | | SHC | 19.7 | 23.7 | 27.8 | 19.1 | 22.9 | 26.8 | 18.3 | 22.0 | 25.8 | 17.5 | 21.1 | 24.6 | 16.6 | 20.0 | 23.4 |
| | | | kW | | 4.7 | | | 5.4 | | | 6.3 | | | 7.2 | | | 8.2 | |
| | | 19.4 | THC | 25.3 | 25.3 | 25.3 | 24.3 | 24.3 | 24.4 | 23.2 | 23.2 | 23.9 | 22.0 | 22.0 | 23.4 | 20.7 | 20.7 | 22.8 |
| | | | SHC | 16.0 | 20.4 | 24.8 | 15.6 | 20.0 | 24.4 | 15.2 | 19.5 | 23.9 | 14.7 | 19.0 | 23.4 | 14.1 | 18.5 | 22.8 |
| | | | kW | | 4.7 | | | 5.5 | | | 6.3 | | | 7.3 | | | 8.3 | |
| | | 22.2 | THC | 27.4 | 27.4 | 27.4 | 26.4 | 26.4 | 26.4 | 25.2 | 25.2 | 25.2 | 23.9 | 23.9 | 23.9 | 22.5 | 22.5 | 22.5 |
| | | | SHC | 11.5 | 15.9 | 20.3 | 11.1 | 15.6 | 20.0 | 10.7 | 15.1 | 19.5 | 10.3 | 14.7 | 19.1 | 9.8 | 14.2 | 18.6 |
| | | | kW | | 4.8 | | | 5.6 | | | 6.4 | | | 7.3 | | | 8.3 | |
| | | 24.4 | THC | – | – | – | – | – | – | – | – | – | – | – | – | – | – | – |
| | | | SHC | – | – | – | – | – | – | – | – | – | – | – | – | – | – | – |
| | | | kW | | – | | | – | | | – | | | – | | | – | |
| 1593 L/S | EAT (wb) | 14.4 | THC | 24.4 | 24.4 | 27.5 | 23.5 | 23.5 | 26.5 | 22.6 | 22.6 | 25.5 | 21.6 | 21.6 | 24.4 | 20.5 | 20.5 | 23.1 |
| | | | SHC | 21.3 | 24.4 | 27.5 | 20.5 | 23.5 | 26.5 | 19.8 | 22.6 | 25.5 | 18.9 | 21.6 | 24.4 | 17.9 | 20.5 | 23.1 |
| | | | kW | | 4.7 | | | 5.5 | | | 6.3 | | | 7.2 | | | 8.2 | |
| | | 16.7 | THC | 24.4 | 24.4 | 28.5 | 23.6 | 23.6 | 27.5 | 22.6 | 22.6 | 26.5 | 21.6 | 21.6 | 25.3 | 20.5 | 20.5 | 24.0 |
| | | | SHC | 20.3 | 24.4 | 28.5 | 19.6 | 23.6 | 27.5 | 18.8 | 22.6 | 26.5 | 18.0 | 21.6 | 25.3 | 17.1 | 20.5 | 24.0 |
| | | | kW | | 4.7 | | | 5.5 | | | 6.3 | | | 7.2 | | | 8.2 | |
| | | 19.4 | THC | 25.6 | 25.6 | 26.5 | 24.6 | 24.6 | 26.0 | 23.5 | 23.5 | 25.5 | 22.2 | 22.2 | 25.0 | 21.0 | 21.0 | 24.4 |
| | | | SHC | 16.8 | 21.6 | 26.5 | 16.3 | 21.2 | 26.0 | 15.9 | 20.7 | 25.5 | 15.4 | 20.2 | 25.0 | 14.8 | 19.6 | 24.4 |
| | | | kW | | 4.7 | | | 5.5 | | | 6.3 | | | 7.3 | | | 8.3 | |
| | | 22.2 | THC | 27.7 | 27.7 | 27.7 | 26.7 | 26.7 | 26.7 | 25.5 | 25.5 | 25.5 | 24.2 | 24.2 | 24.2 | – | – | – |
| | | | SHC | 11.8 | 16.7 | 21.6 | 11.5 | 16.4 | 21.2 | 11.0 | 15.9 | 20.8 | 10.6 | 15.5 | 20.3 | – | – | – |
| | | | kW | | 4.8 | | | 5.6 | | | 6.4 | | | 7.3 | | | – | |
| | | 24.4 | THC | – | – | – | – | – | – | – | – | – | – | – | – | – | – | – |
| | | | SHC | – | – | – | – | – | – | – | – | – | – | – | – | – | – | – |
| | | | kW | | – | | | – | | | – | | | – | | | – | |
| 1770 L/S | EAT (wb) | 14.4 | THC | 24.9 | 24.9 | 28.1 | 24.1 | 24.1 | 27.1 | 23.1 | 23.1 | 26.1 | 22.1 | 22.1 | 24.9 | 21.0 | 21.0 | 23.6 |
| | | | SHC | 21.8 | 24.9 | 28.1 | 21.0 | 24.1 | 27.1 | 20.2 | 23.1 | 26.1 | 19.3 | 22.1 | 24.9 | 18.3 | 21.0 | 23.6 |
| | | | kW | | 4.7 | | | 5.5 | | | 6.3 | | | 7.3 | | | 8.3 | |
| | | 16.7 | THC | 24.9 | 24.9 | 29.2 | 24.1 | 24.1 | 28.2 | 23.2 | 23.2 | 27.1 | 22.1 | 22.1 | 25.8 | 21.0 | 21.0 | 24.5 |
| | | | SHC | 20.7 | 24.9 | 29.2 | 20.0 | 24.1 | 28.2 | 19.2 | 23.2 | 27.1 | 18.3 | 22.1 | 25.8 | 17.4 | 21.0 | 24.5 |
| | | | kW | | 4.7 | | | 5.5 | | | 6.3 | | | 7.3 | | | 8.3 | |
| | | 19.4 | THC | 25.8 | 25.8 | 28.1 | 24.8 | 24.8 | 27.6 | 23.7 | 23.7 | 27.1 | 22.5 | 22.5 | 26.5 | 21.2 | 21.2 | 25.7 |
| | | | SHC | 17.5 | 22.8 | 28.1 | 17.1 | 22.3 | 27.6 | 16.6 | 21.8 | 27.1 | 16.1 | 21.2 | 26.5 | 15.4 | 20.6 | 25.7 |
| | | | kW | | 4.7 | | | 5.5 | | | 6.3 | | | 7.3 | | | 8.3 | |
| | | 22.2 | THC | 28.0 | 28.0 | 28.0 | 26.9 | 26.9 | 26.9 | 25.7 | 25.7 | 25.7 | 24.4 | 24.4 | 24.4 | – | – | – |
| | | | SHC | 12.1 | 17.5 | 22.9 | 11.8 | 17.1 | 22.5 | 11.3 | 16.7 | 22.0 | 10.9 | 16.2 | 21.6 | – | – | – |
| | | | kW | | 4.8 | | | 5.6 | | | 6.4 | | | 7.3 | | | – | |
| | | 24.4 | THC | – | – | – | – | – | – | – | – | – | – | – | – | – | – | – |
| | | | SHC | – | – | – | – | – | – | – | – | – | – | – | – | – | – | – |
| | | | kW | | – | | | – | | | – | | | – | | | – | |

**LEGEND:**

– = Do not operate
L/s = Liters per second
EAT(wb) = Entering air temp (wet bulb)
kW = Compressor kilowatts
SHC = Sensible heat capacity (Gross)
THC = Total heat capacity (Gross)
EAT(db) = Entering air temp (dry bulb)
Cfm = Cubic feet per minute (supply air)

38AU

# PERFORMANCE DATA (cont.)

**38AUZ08 - 40RUA08** **COMBINATION RATINGS** **ENGLISH**

| | | | | Ambient Temperature | | | | | | | | | | | | | | |
|---|---|---|---|---|---|---|---|---|---|---|---|---|---|---|---|---|---|---|
| | | | | 85.0 | | | 95.0 | | | 105.0 | | | 115.0 | | | 125.0 | | |
| | | | | EAT (db) | | | EAT (db) | | | EAT (db) | | | EAT (db) | | | EAT (db) | | |
| | | | | 75.0 | 80.0 | 85.0 | 75.0 | 80.0 | 85.0 | 75.0 | 80.0 | 85.0 | 75.0 | 80.0 | 85.0 | 75.0 | 80.0 | 85.0 |
| 2250 cfm | EAT (wb) | 58.0 | THC | 74.7 | 74.7 | 84.1 | 72.2 | 72.2 | 81.4 | 69.6 | 69.6 | 78.4 | 66.6 | 66.6 | 75.1 | 63.4 | 63.4 | 71.5 |
| | | | SHC | 65.2 | 74.7 | 84.1 | 63.1 | 72.2 | 81.4 | 60.7 | 69.6 | 78.4 | 58.2 | 66.6 | 75.1 | 55.4 | 63.4 | 71.5 |
| | | | kW | | 4.6 | | | 5.4 | | | 6.2 | | | 7.2 | | | 8.2 | |
| | | 62.0 | THC | 76.7 | 76.7 | 83.0 | 73.7 | 73.7 | 81.4 | 70.5 | 70.5 | 79.6 | 67.0 | 67.0 | 77.3 | 63.5 | 63.5 | 74.2 |
| | | | SHC | 60.2 | 71.6 | 83.0 | 58.7 | 70.0 | 81.4 | 57.1 | 68.3 | 79.6 | 55.1 | 66.2 | 77.3 | 52.7 | 63.5 | 74.2 |
| | | | kW | | 4.6 | | | 5.4 | | | 6.3 | | | 7.2 | | | 8.2 | |
| | | 67.0 | THC | 83.3 | 83.3 | 83.3 | 80.1 | 80.1 | 80.1 | 76.5 | 76.5 | 76.5 | 72.6 | 72.6 | 72.6 | 68.4 | 68.4 | 68.4 |
| | | | SHC | 48.8 | 60.4 | 72.0 | 47.5 | 59.0 | 70.6 | 46.0 | 57.6 | 69.1 | 44.5 | 56.0 | 67.5 | 42.8 | 54.3 | 65.8 |
| | | | kW | | 4.7 | | | 5.5 | | | 6.3 | | | 7.2 | | | 8.2 | |
| | | 72.0 | THC | 90.5 | 90.5 | 90.5 | 87.1 | 87.1 | 87.1 | 83.3 | 83.3 | 83.3 | 79.2 | 79.2 | 79.2 | – | – | – |
| | | | SHC | 37.0 | 48.7 | 60.3 | 35.8 | 47.4 | 59.0 | 34.4 | 46.0 | 57.6 | 32.8 | 44.4 | 56.0 | – | – | – |
| | | | kW | | 4.8 | | 5.5 | | | 6.4 | | | | 7.3 | | | – | |
| | | 76.0 | THC | – | 96.5 | 96.5 | – | 93.0 | 93.0 | – | 89.1 | 89.1 | – | 84.7 | 84.7 | – | – | – |
| | | | SHC | – | 39.2 | 51.2 | – | 37.9 | 49.9 | – | 36.6 | 48.5 | – | 35.1 | 47.0 | – | – | – |
| | | | kW | | 4.8 | | 5.6 | | | 6.4 | | | | 7.4 | | | – | |
| 2625 cfm | EAT (wb) | 58.0 | THC | 78.1 | 78.1 | 88.0 | 75.5 | 75.5 | 85.1 | 72.7 | 72.7 | 81.9 | 69.5 | 69.5 | 78.3 | 66.1 | 66.1 | 74.5 |
| | | | SHC | 68.2 | 78.1 | 88.0 | 65.9 | 75.5 | 85.1 | 63.4 | 72.7 | 81.9 | 60.7 | 69.5 | 78.3 | 57.7 | 66.1 | 74.5 |
| | | | kW | | 4.6 | | 5.4 | | | 6.3 | | | | 7.2 | | | 8.2 | |
| | | 62.0 | THC | 78.8 | 78.8 | 90.1 | 75.7 | 75.7 | 88.5 | 72.7 | 72.7 | 85.0 | 69.6 | 69.6 | 81.4 | 66.2 | 66.2 | 77.4 |
| | | | SHC | 64.4 | 77.3 | 90.1 | 62.9 | 75.7 | 88.5 | 60.4 | 72.7 | 85.0 | 57.8 | 69.6 | 81.4 | 54.9 | 66.2 | 77.4 |
| | | | kW | | 4.7 | | 5.4 | | | 6.3 | | | | 7.2 | | | 8.2 | |
| | | 67.0 | THC | 85.1 | 85.1 | 85.1 | 81.7 | 81.7 | 81.7 | 78.0 | 78.0 | 78.0 | 74.0 | 74.0 | 74.0 | 69.7 | 69.7 | 72.0 |
| | | | SHC | 51.8 | 65.1 | 78.4 | 50.4 | 63.7 | 77.0 | 48.9 | 62.2 | 75.5 | 47.3 | 60.6 | 73.8 | 45.6 | 58.8 | 72.0 |
| | | | kW | | 4.7 | | | 5.5 | | | 6.3 | | | 7.2 | | | 8.2 | |
| | | 72.0 | THC | 92.3 | 92.3 | 92.3 | 88.7 | 88.7 | 88.7 | 84.9 | 84.9 | 84.9 | 80.6 | 80.6 | 80.6 | 75.9 | 75.9 | 75.9 |
| | | | SHC | 38.2 | 51.6 | 65.0 | 36.9 | 50.3 | 63.6 | 35.5 | 48.9 | 62.2 | 34.0 | 47.3 | 60.6 | 32.4 | 45.6 | 58.9 |
| | | | kW | | 4.8 | | | 5.5 | | | 6.4 | | | 7.3 | | | 8.3 | |
| | | 76.0 | THC | – | 98.5 | 98.5 | – | 94.7 | 94.7 | – | 90.7 | 90.7 | – | – | – | – | – | – |
| | | | SHC | – | 40.7 | 54.5 | – | 39.5 | 53.1 | – | 38.1 | 51.7 | – | – | – | – | – | – |
| | | | kW | | 4.8 | | | 5.6 | | | 6.5 | | | – | | | – | |
| 3000 cfm | EAT (wb) | 58.0 | THC | 80.9 | 80.9 | 91.2 | 78.2 | 78.2 | 88.1 | 75.2 | 75.2 | 84.7 | 71.9 | 71.9 | 81.0 | 68.3 | 68.3 | 76.9 |
| | | | SHC | 70.6 | 80.9 | 91.2 | 68.2 | 78.2 | 88.1 | 65.6 | 75.2 | 84.7 | 62.8 | 71.9 | 81.0 | 59.6 | 68.3 | 76.9 |
| | | | kW | | 4.7 | | | 5.4 | | | 6.3 | | | 7.2 | | | 8.2 | |
| | | 62.0 | THC | 81.0 | 81.0 | 94.7 | 78.3 | 78.3 | 91.6 | 75.2 | 75.2 | 88.0 | 71.9 | 71.9 | 84.1 | 68.3 | 68.3 | 79.9 |
| | | | SHC | 67.3 | 81.0 | 94.7 | 65.0 | 78.3 | 91.6 | 62.5 | 75.2 | 88.0 | 59.7 | 71.9 | 84.1 | 56.8 | 68.3 | 79.9 |
| | | | kW | | 4.7 | | | 5.4 | | | 6.3 | | | 7.2 | | | 8.2 | |
| | | 67.0 | THC | 86.3 | 86.3 | 86.3 | 82.9 | 82.9 | 83.1 | 79.2 | 79.2 | 81.5 | 75.1 | 75.1 | 79.7 | 70.7 | 70.7 | 77.8 |
| | | | SHC | 54.5 | 69.5 | 84.5 | 53.2 | 68.1 | 83.1 | 51.7 | 66.6 | 81.5 | 50.0 | 64.9 | 79.7 | 48.2 | 63.0 | 77.8 |
| | | | kW | | 4.7 | | | 5.5 | | | 6.3 | | | 7.3 | | | 8.3 | |
| | | 72.0 | THC | 93.6 | 93.6 | 93.6 | 90.0 | 90.0 | 90.0 | 86.0 | 86.0 | 86.0 | 81.6 | 81.6 | 81.6 | 76.9 | 76.9 | 76.9 |
| | | | SHC | 39.3 | 54.4 | 69.4 | 38.0 | 53.1 | 68.1 | 36.6 | 51.6 | 66.7 | 35.1 | 50.1 | 65.1 | 33.4 | 48.4 | 63.4 |
| | | | kW | | 4.8 | | | 5.6 | | | 6.4 | | | 7.3 | | | 8.3 | |
| | | 76.0 | THC | – | – | – | – | – | – | – | – | – | – | – | – | – | – | – |
| | | | SHC | – | – | – | – | – | – | – | – | – | – | – | – | – | – | – |
| | | | kW | | – | | | – | | – | | | | – | | | – | |
| 3375 cfm | EAT (wb) | 58.0 | THC | 83.1 | 83.1 | 93.7 | 80.3 | 80.3 | 90.5 | 77.2 | 77.2 | 87.0 | 73.8 | 73.8 | 83.1 | 70.0 | 70.0 | 78.9 |
| | | | SHC | 72.6 | 83.1 | 93.7 | 70.1 | 80.3 | 90.5 | 67.4 | 77.2 | 87.0 | 64.4 | 73.8 | 83.1 | 61.1 | 70.0 | 78.9 |
| | | | kW | | 4.7 | | | 5.5 | | | 6.3 | | | 7.2 | | | 8.2 | |
| | | 62.0 | THC | 83.2 | 83.2 | 97.3 | 80.4 | 80.4 | 94.0 | 77.2 | 77.2 | 90.3 | 73.8 | 73.8 | 86.3 | 70.1 | 70.1 | 81.9 |
| | | | SHC | 69.1 | 83.2 | 97.3 | 66.8 | 80.4 | 94.0 | 64.2 | 77.2 | 90.3 | 61.3 | 73.8 | 86.3 | 58.2 | 70.1 | 81.9 |
| | | | kW | | 4.7 | | | 5.5 | | | 6.3 | | | 7.2 | | | 8.2 | |
| | | 67.0 | THC | 87.4 | 87.4 | 90.3 | 83.9 | 83.9 | 88.8 | 80.1 | 80.1 | 87.1 | 75.9 | 75.9 | 85.3 | 71.5 | 71.5 | 83.1 |
| | | | SHC | 57.2 | 73.7 | 90.3 | 55.7 | 72.3 | 88.8 | 54.2 | 70.7 | 87.1 | 52.5 | 68.9 | 85.3 | 50.6 | 66.9 | 83.1 |
| | | | kW | | 4.7 | | | 5.5 | | | 6.3 | | | 7.3 | | | 8.3 | |
| | | 72.0 | THC | 94.6 | 94.6 | 94.6 | 91.0 | 91.0 | 91.0 | 86.9 | 86.9 | 86.9 | 82.5 | 82.5 | 82.5 | – | – | – |
| | | | SHC | 40.4 | 57.1 | 73.8 | 39.1 | 55.8 | 72.4 | 37.7 | 54.3 | 71.0 | 36.1 | 52.8 | 69.4 | – | – | – |
| | | | kW | | 4.8 | | | 5.6 | | | 6.4 | | | 7.3 | | | – | |
| | | 76.0 | THC | – | – | – | – | – | – | – | – | – | – | – | – | – | – | – |
| | | | SHC | – | – | – | – | – | – | – | – | – | – | – | – | – | – | – |
| | | | kW | | – | | | – | | | – | | | – | | | – | |
| 3750 cfm | EAT (wb) | 58.0 | THC | 85.1 | 85.1 | 95.8 | 82.1 | 82.1 | 92.5 | 78.9 | 78.9 | 88.9 | 75.4 | 75.4 | 84.9 | 71.5 | 71.5 | 80.6 |
| | | | SHC | 74.3 | 85.1 | 95.8 | 71.7 | 82.1 | 92.5 | 68.9 | 78.9 | 88.9 | 65.8 | 75.4 | 84.9 | 62.4 | 71.5 | 80.6 |
| | | | kW | | 4.7 | | | 5.5 | | | 6.3 | | | 7.3 | | | 8.3 | |
| | | 62.0 | THC | 85.1 | 85.1 | 99.5 | 82.2 | 82.2 | 96.1 | 79.0 | 79.0 | 92.3 | 75.4 | 75.4 | 88.2 | 71.5 | 71.5 | 83.6 |
| | | | SHC | 70.7 | 85.1 | 99.5 | 68.3 | 82.2 | 96.1 | 65.6 | 79.0 | 92.3 | 62.6 | 75.4 | 88.2 | 59.4 | 71.5 | 83.6 |
| | | | kW | | 4.7 | | | 5.5 | | | 6.3 | | | 7.3 | | | 8.3 | |
| | | 67.0 | THC | 88.2 | 88.2 | 95.8 | 84.7 | 84.7 | 94.2 | 80.9 | 80.9 | 92.4 | 76.7 | 76.7 | 90.3 | 72.2 | 72.2 | 87.8 |
| | | | SHC | 59.6 | 77.7 | 95.8 | 58.2 | 76.2 | 94.2 | 56.6 | 74.5 | 92.4 | 54.8 | 72.5 | 90.3 | 52.7 | 70.3 | 87.8 |
| | | | kW | | 4.7 | | | 5.5 | | | 6.3 | | | 7.3 | | | 8.3 | |
| | | 72.0 | THC | 95.5 | 95.5 | 95.5 | 91.7 | 91.7 | 91.7 | 87.6 | 87.6 | 87.6 | 83.1 | 83.1 | 83.1 | – | – | – |
| | | | SHC | 41.4 | 59.7 | 78.0 | 40.1 | 58.4 | 76.6 | 38.7 | 56.9 | 75.2 | 37.1 | 55.3 | 73.6 | – | – | – |
| | | | kW | | 4.8 | | | 5.6 | | | 6.4 | | | 7.3 | | | – | |
| | | 76.0 | THC | – | – | – | – | – | – | – | – | – | – | – | – | – | – | – |
| | | | SHC | – | – | – | – | – | – | – | – | – | – | – | – | – | – | – |
| | | | kW | | – | | | – | | | – | | | – | | | – | |

**LEGEND:**

– = Do not operate
L/s = Liters per second
EAT(wb) = Entering air temp (wet bulb)
kW = Compressor kilowatts
SHC = Sensible heat capacity (Gross)
THC = Total heat capacity (Gross)
EAT(db) = Entering air temp (dry bulb)
Cfm = Cubic feet per minute (supply air)

38AU

# PERFORMANCE DATA (cont.)

## 38AUD12 - 40RUA12 COMBINATION RATINGS SI

| | | | | Ambient Temperature | | | | | | | | | | | | | | |
|---|---|---|---|---|---|---|---|---|---|---|---|---|---|---|---|---|---|---|
| | | | | 29.4 | | | 35.0 | | | 40.6 | | | 46.1 | | | 51.7 | | |
| | | | | EAT (db) | | | EAT (db) | | | EAT (db) | | | EAT (db) | | | EAT (db) | | |
| | | | | 23.9 | 26.7 | 29.4 | 23.9 | 26.7 | 29.4 | 23.9 | 26.7 | 29.4 | 23.9 | 26.7 | 29.4 | 23.9 | 26.7 | 29.4 |
| 1416 L/S | EAT (wb) | 14.4 | THC | 28.2 | 28.2 | 31.8 | 27.2 | 27.2 | 30.7 | 26.1 | 26.1 | 29.4 | 24.9 | 24.9 | 28.1 | 23.5 | 23.5 | 26.5 |
| | | | SHC | 24.6 | 28.2 | 31.8 | 23.8 | 27.2 | 30.7 | 22.8 | 26.1 | 29.4 | 21.7 | 24.9 | 28.1 | 20.5 | 23.5 | 26.5 |
| | | | kW | 5.9 | | | 6.8 | | | 7.9 | | | 9.0 | | | 10.2 | | |
| | | 16.7 | THC | 28.7 | 28.7 | 31.9 | 27.5 | 27.5 | 31.2 | 26.2 | 26.2 | 30.4 | 24.9 | 24.9 | 29.2 | 23.6 | 23.6 | 27.5 |
| | | | SHC | 22.9 | 27.4 | 31.9 | 22.3 | 26.8 | 31.2 | 21.7 | 26.1 | 30.4 | 20.7 | 24.9 | 29.2 | 19.6 | 23.6 | 27.5 |
| | | | kW | 5.9 | | | 6.8 | | | 7.9 | | | 9.0 | | | 10.2 | | |
| | | 19.4 | THC | 31.2 | 31.2 | 31.2 | 29.9 | 29.9 | 29.9 | 28.5 | 28.5 | 28.5 | 26.9 | 26.9 | 26.9 | 25.1 | 25.1 | 25.1 |
| | | | SHC | 18.6 | 23.1 | 27.6 | 18.0 | 22.5 | 27.1 | 17.4 | 22.0 | 26.5 | 16.8 | 21.3 | 25.8 | 16.1 | 20.6 | 25.1 |
| | | | kW | 6.0 | | | 6.9 | | | 7.9 | | | 9.0 | | | 10.2 | | |
| | | 22.2 | THC | 33.8 | 33.8 | 33.8 | 32.5 | 32.5 | 32.5 | 31.0 | 31.0 | 31.0 | 29.3 | 29.3 | 29.3 | – | – | – |
| | | | SHC | 13.9 | 18.5 | 23.0 | 13.4 | 18.0 | 22.5 | 12.9 | 17.4 | 22.0 | 12.3 | 16.8 | 21.4 | – | – | – |
| | | | kW | 6.0 | | | 7.0 | | | 8.0 | | | 9.1 | | | 10.3 | | |
| | | 24.4 | THC | – | 36.1 | 36.1 | – | – | – | – | – | – | – | – | – | – | – | – |
| | | | SHC | – | 14.7 | 19.3 | – | – | – | – | – | – | – | – | – | – | – | – |
| | | | kW | 6.1 | | | – | | | – | | | – | | | – | | |
| 1652 L/S | EAT (wb) | 14.4 | THC | 29.5 | 29.5 | 33.2 | 28.4 | 28.4 | 32.0 | 27.3 | 27.3 | 30.7 | 26.0 | 26.0 | 29.3 | 24.6 | 24.6 | 27.7 |
| | | | SHC | 25.7 | 29.5 | 33.2 | 24.8 | 28.4 | 32.0 | 23.8 | 27.3 | 30.7 | 22.7 | 26.0 | 29.3 | 21.4 | 24.6 | 27.7 |
| | | | kW | 5.9 | | | 6.9 | | | 7.9 | | | 9.0 | | | 10.2 | | |
| | | 16.7 | THC | 29.6 | 29.6 | 34.3 | 28.5 | 28.5 | 33.3 | 27.3 | 27.3 | 31.9 | 26.0 | 26.0 | 30.4 | 24.6 | 24.6 | 28.7 |
| | | | SHC | 24.4 | 29.3 | 34.3 | 23.6 | 28.5 | 33.3 | 22.7 | 27.3 | 31.9 | 21.6 | 26.0 | 30.4 | 20.4 | 24.6 | 28.7 |
| | | | kW | 5.9 | | | 6.9 | | | 7.9 | | | 9.0 | | | 10.2 | | |
| | | 19.4 | THC | 31.8 | 31.8 | 31.8 | 30.5 | 30.5 | 30.5 | 29.0 | 29.0 | 29.0 | 27.4 | 27.4 | 28.3 | 25.6 | 25.6 | 27.5 |
| | | | SHC | 19.7 | 24.9 | 30.1 | 19.1 | 24.4 | 29.6 | 18.6 | 23.8 | 29.0 | 17.9 | 23.1 | 28.3 | 17.2 | 22.4 | 27.5 |
| | | | kW | 6.0 | | | 6.9 | | | 7.9 | | | 9.1 | | | 10.2 | | |
| | | 22.2 | THC | 34.5 | 34.5 | 34.5 | 33.1 | 33.1 | 33.1 | 31.5 | 31.5 | 31.5 | 29.8 | 29.8 | 29.8 | 28.0 | 28.0 | 28.0 |
| | | | SHC | 14.4 | 19.6 | 24.9 | 13.9 | 19.1 | 24.4 | 13.3 | 18.6 | 23.8 | 12.7 | 17.9 | 23.2 | 12.0 | 17.3 | 22.5 |
| | | | kW | 6.1 | | | 7.0 | | | 8.0 | | | 9.1 | | | 10.3 | | |
| | | 24.4 | THC | – | – | – | – | – | – | – | – | – | – | – | – | – | – | – |
| | | | SHC | – | – | – | – | – | – | – | – | – | – | – | – | – | – | – |
| | | | kW | – | | | – | | | – | | | – | | | – | | |
| 1888 L/S | EAT (wb) | 14.4 | THC | 30.5 | 30.5 | 34.3 | 29.4 | 29.4 | 33.1 | 28.2 | 28.2 | 31.7 | 26.8 | 26.8 | 30.2 | 25.3 | 25.3 | 28.5 |
| | | | SHC | 26.6 | 30.5 | 34.3 | 25.7 | 29.4 | 33.1 | 24.6 | 28.2 | 31.7 | 23.4 | 26.8 | 30.2 | 22.1 | 25.3 | 28.5 |
| | | | kW | 5.9 | | | 6.9 | | | 7.9 | | | 9.0 | | | 10.2 | | |
| | | 16.7 | THC | 30.5 | 30.5 | 35.7 | 29.4 | 29.4 | 34.4 | 28.2 | 28.2 | 33.0 | 26.8 | 26.8 | 31.4 | 25.4 | 25.4 | 29.7 |
| | | | SHC | 25.4 | 30.5 | 35.7 | 24.4 | 29.4 | 34.4 | 23.4 | 28.2 | 33.0 | 22.3 | 26.8 | 31.4 | 21.1 | 25.4 | 29.7 |
| | | | kW | 5.9 | | | 6.9 | | | 7.9 | | | 9.0 | | | 10.2 | | |
| | | 19.4 | THC | 32.3 | 32.3 | 32.5 | 30.9 | 30.9 | 31.9 | 29.4 | 29.4 | 31.3 | 27.8 | 27.8 | 30.6 | 26.0 | 26.0 | 29.8 |
| | | | SHC | 20.8 | 26.6 | 32.5 | 20.2 | 26.1 | 31.9 | 19.6 | 25.5 | 31.3 | 19.0 | 24.8 | 30.6 | 18.2 | 24.0 | 29.8 |
| | | | kW | 6.0 | | | 6.9 | | | 8.0 | | | 9.1 | | | 10.2 | | |
| | | 22.2 | THC | 34.9 | 34.9 | 34.9 | 33.5 | 33.5 | 33.5 | 31.9 | 31.9 | 31.9 | 30.2 | 30.2 | 30.2 | – | – | – |
| | | | SHC | 14.8 | 20.7 | 26.6 | 14.3 | 20.2 | 26.1 | 13.7 | 19.6 | 25.6 | 13.2 | 19.1 | 24.9 | – | – | – |
| | | | kW | 6.1 | | | 7.0 | | | 8.0 | | | 9.1 | | | – | | |
| | | 24.4 | THC | – | – | – | – | – | – | – | – | – | – | – | – | – | – | – |
| | | | SHC | – | – | – | – | – | – | – | – | – | – | – | – | – | – | – |
| | | | kW | – | | | – | | | – | | | – | | | – | | |
| 2124 L/S | EAT (wb) | 14.4 | THC | 31.3 | 31.3 | 35.3 | 30.2 | 30.2 | 34.0 | 28.9 | 28.9 | 32.6 | 27.5 | 27.5 | 31.0 | 26.0 | 26.0 | 29.3 |
| | | | SHC | 27.3 | 31.3 | 35.3 | 26.3 | 30.2 | 34.0 | 25.3 | 28.9 | 32.6 | 24.0 | 27.5 | 31.0 | 22.7 | 26.0 | 29.3 |
| | | | kW | 6.0 | | | 6.9 | | | 7.9 | | | 9.1 | | | 10.2 | | |
| | | 16.7 | THC | 31.4 | 31.4 | 36.7 | 30.2 | 30.2 | 35.3 | 29.0 | 29.0 | 33.9 | 27.5 | 27.5 | 32.2 | 26.0 | 26.0 | 30.4 |
| | | | SHC | 26.1 | 31.4 | 36.7 | 25.1 | 30.2 | 35.3 | 24.0 | 29.0 | 33.9 | 22.9 | 27.5 | 32.2 | 21.6 | 26.0 | 30.4 |
| | | | kW | 6.0 | | | 6.9 | | | 7.9 | | | 9.1 | | | 10.2 | | |
| | | 19.4 | THC | 32.6 | 32.6 | 34.8 | 31.2 | 31.2 | 34.2 | 29.7 | 29.7 | 33.5 | 28.1 | 28.1 | 32.7 | 26.3 | 26.3 | 31.7 |
| | | | SHC | 21.8 | 28.3 | 34.8 | 21.2 | 27.7 | 34.2 | 20.6 | 27.1 | 33.5 | 19.9 | 26.3 | 32.7 | 19.1 | 25.4 | 31.7 |
| | | | kW | 6.0 | | | 6.9 | | | 8.0 | | | 9.1 | | | 10.2 | | |
| | | 22.2 | THC | 35.3 | 35.3 | 35.3 | 33.8 | 33.8 | 33.8 | 32.2 | 32.2 | 32.2 | – | – | – | – | – | – |
| | | | SHC | 15.2 | 21.8 | 28.3 | 14.7 | 21.2 | 27.8 | 14.2 | 20.7 | 27.3 | – | – | – | – | – | – |
| | | | kW | 6.1 | | | 7.0 | | | 8.0 | | | – | | | – | | |
| | | 24.4 | THC | – | – | – | – | – | – | – | – | – | – | – | – | – | – | – |
| | | | SHC | – | – | – | – | – | – | – | – | – | – | – | – | – | – | – |
| | | | kW | – | | | – | | | – | | | – | | | – | | |
| 2360 L/S | EAT (wb) | 14.4 | THC | 32.0 | 32.0 | 36.1 | 30.9 | 30.9 | 34.8 | 29.5 | 29.5 | 33.3 | 28.1 | 28.1 | 31.7 | 26.5 | 26.5 | 29.9 |
| | | | SHC | 28.0 | 32.0 | 36.1 | 26.9 | 30.9 | 34.8 | 25.8 | 29.5 | 33.3 | 24.6 | 28.1 | 31.7 | 23.2 | 26.5 | 29.9 |
| | | | kW | 6.0 | | | 6.9 | | | 8.0 | | | 9.1 | | | 10.2 | | |
| | | 16.7 | THC | 32.0 | 32.0 | 37.5 | 30.9 | 30.9 | 36.1 | 29.6 | 29.6 | 34.6 | 28.1 | 28.1 | 32.9 | 26.6 | 26.6 | 31.0 |
| | | | SHC | 26.6 | 32.0 | 37.5 | 25.6 | 30.9 | 36.1 | 24.6 | 29.6 | 34.6 | 23.4 | 28.1 | 32.9 | 22.0 | 26.6 | 31.0 |
| | | | kW | 6.0 | | | 6.9 | | | 8.0 | | | 9.1 | | | 10.2 | | |
| | | 19.4 | THC | 32.9 | 32.9 | 36.9 | 31.6 | 31.6 | 36.2 | 30.0 | 30.0 | 35.5 | 28.4 | 28.4 | 34.5 | 26.6 | 26.6 | 33.3 |
| | | | SHC | 22.7 | 29.8 | 36.9 | 22.2 | 29.2 | 36.2 | 21.5 | 28.5 | 35.5 | 20.8 | 27.6 | 34.5 | 19.8 | 26.6 | 33.3 |
| | | | kW | 6.0 | | | 7.0 | | | 8.0 | | | 9.1 | | | 10.2 | | |
| | | 22.2 | THC | 35.6 | 35.6 | 35.6 | 34.1 | 34.1 | 34.1 | – | – | – | – | – | – | – | – | – |
| | | | SHC | 15.6 | 22.8 | 30.0 | 15.1 | 22.3 | 29.5 | – | – | – | – | – | – | – | – | – |
| | | | kW | 6.1 | | | 7.0 | | | – | | | – | | | – | | |
| | | 24.4 | THC | – | – | – | – | – | – | – | – | – | – | – | – | – | – | – |
| | | | SHC | – | – | – | – | – | – | – | – | – | – | – | – | – | – | – |
| | | | kW | – | | | – | | | – | | | – | | | – | | |

**LEGEND:**

– = Do not operate
L/s = Liters per second
EAT(wb) = Entering air temp (wet bulb)
kW = Compressor kilowatts
SHC = Sensible heat capacity (Gross)
THC = Total heat capacity (Gross)
EAT(db) = Entering air temp (dry bulb)
Cfm = Cubic feet per minute (supply air)

# PERFORMANCE DATA (cont.)

**38AUD12 - 40RUA12** **COMBINATION RATINGS** **ENGLISH**

| | | | | Ambient Temperature | | | | | | | | | | | | | | |
|---|---|---|---|---|---|---|---|---|---|---|---|---|---|---|---|---|---|---|
| | | | | 85.0 | | | 95.0 | | | 105.0 | | | 115.0 | | | 125.0 | | |
| | | | | EAT (db) | | | EAT (db) | | | EAT (db) | | | EAT (db) | | | EAT (db) | | |
| | | | | 75.0 | 80.0 | 85.0 | 75.0 | 80.0 | 85.0 | 75.0 | 80.0 | 85.0 | 75.0 | 80.0 | 85.0 | 75.0 | 80.0 | 85.0 |
| 3000 cfm | EAT (wb) | 58.0 | THC | 96.3 | 96.3 | 108.5 | 92.9 | 92.9 | 104.6 | 89.1 | 89.1 | 100.4 | 85.0 | 85.0 | 95.8 | 80.3 | 80.3 | 90.5 |
| | | | SHC | 84.1 | 96.3 | 108.5 | 81.1 | 92.9 | 104.6 | 77.8 | 89.1 | 100.4 | 74.2 | 85.0 | 95.8 | 70.1 | 80.3 | 90.5 |
| | | | kW | 5.9 | | | 6.8 | | | 7.9 | | | 9.0 | | | 10.2 | | |
| | | 62.0 | THC | 98.0 | 98.0 | 108.7 | 94.0 | 94.0 | 106.4 | 89.5 | 89.5 | 103.8 | 85.1 | 85.1 | 99.5 | 80.4 | 80.4 | 94.0 |
| | | | SHC | 78.3 | 93.5 | 108.7 | 76.2 | 91.3 | 106.4 | 73.9 | 88.9 | 103.8 | 70.7 | 85.1 | 99.5 | 66.8 | 80.4 | 94.0 |
| | | | kW | 5.9 | | | 6.8 | | | 7.9 | | | 9.0 | | | 10.2 | | |
| | | 67.0 | THC | 106.4 | 106.4 | 106.4 | 102.0 | 102.0 | 102.0 | 97.1 | 97.1 | 97.1 | 91.7 | 91.7 | 91.7 | 85.8 | 85.8 | 85.8 |
| | | | SHC | 63.3 | 78.7 | 94.2 | 61.5 | 76.9 | 92.4 | 59.5 | 74.9 | 90.4 | 57.3 | 72.8 | 88.2 | 54.9 | 70.3 | 85.8 |
| | | | kW | 6.0 | | | 6.9 | | | 7.9 | | | 9.0 | | | 10.2 | | |
| | | 72.0 | THC | 115.4 | 115.4 | 115.4 | 110.8 | 110.8 | 110.8 | 105.8 | 105.8 | 105.8 | 100.1 | 100.1 | 100.1 | 93.8 | 93.8 | 93.8 |
| | | | SHC | 47.4 | 63.0 | 78.6 | 45.7 | 61.3 | 76.8 | 43.9 | 59.4 | 75.0 | 41.8 | 57.4 | 72.9 | 39.6 | 55.1 | 70.6 |
| | | | kW | 6.0 | | | 7.0 | | | 8.0 | | | 9.1 | | | 10.3 | | |
| | | 76.0 | THC | – | 123.2 | 123.2 | – | – | – | – | – | – | – | – | – | – | – | – |
| | | | SHC | – | 50.2 | 66.0 | – | – | – | – | – | – | – | – | – | – | – | – |
| | | | kW | 6.1 | | | – | | | – | | | – | | | – | | |
| 3500 cfm | EAT (wb) | 58.0 | THC | 100.6 | 100.6 | 113.4 | 97.0 | 97.0 | 109.3 | 93.0 | 93.0 | 104.8 | 88.6 | 88.6 | 99.9 | 83.8 | 83.8 | 94.4 |
| | | | SHC | 87.8 | 100.6 | 113.4 | 84.7 | 97.0 | 109.3 | 81.2 | 93.0 | 104.8 | 77.4 | 88.6 | 99.9 | 73.1 | 83.8 | 94.4 |
| | | | kW | 5.9 | | | 6.9 | | | 7.9 | | | 9.0 | | | 10.2 | | |
| | | 62.0 | THC | 100.9 | 100.9 | 117.0 | 97.1 | 97.1 | 113.5 | 93.1 | 93.1 | 108.9 | 88.7 | 88.7 | 103.7 | 83.8 | 83.8 | 98.0 |
| | | | SHC | 83.2 | 100.1 | 117.0 | 80.6 | 97.1 | 113.5 | 77.3 | 93.1 | 108.9 | 73.7 | 88.7 | 103.7 | 69.6 | 83.8 | 98.0 |
| | | | kW | 5.9 | | | 6.9 | | | 7.9 | | | 9.0 | | | 10.2 | | |
| | | 67.0 | THC | 108.5 | 108.5 | 108.5 | 104.0 | 104.0 | 104.0 | 98.9 | 98.9 | 98.9 | 93.4 | 93.4 | 96.5 | 87.3 | 87.3 | 94.0 |
| | | | SHC | 67.2 | 85.0 | 102.8 | 65.3 | 83.1 | 100.9 | 63.3 | 81.1 | 98.8 | 61.1 | 78.8 | 96.5 | 58.7 | 76.3 | 94.0 |
| | | | kW | 6.0 | | | 6.9 | | | 7.9 | | | 9.1 | | | 10.2 | | |
| | | 72.0 | THC | 117.6 | 117.6 | 117.6 | 112.8 | 112.8 | 112.8 | 107.6 | 107.6 | 107.6 | 101.8 | 101.8 | 101.8 | 95.4 | 95.4 | 95.4 |
| | | | SHC | 49.0 | 66.9 | 84.8 | 47.3 | 65.2 | 83.1 | 45.4 | 63.3 | 81.2 | 43.4 | 61.2 | 79.1 | 41.1 | 59.0 | 76.8 |
| | | | kW | 6.1 | | | 7.0 | | | 8.0 | | | 9.1 | | | 10.3 | | |
| | | 76.0 | THC | – | – | – | – | – | – | – | – | – | – | – | – | – | – | – |
| | | | SHC | – | – | – | – | – | – | – | – | – | – | – | – | – | – | – |
| | | | kW | – | | | – | | | – | | | – | | | – | | |
| 4000 cfm | EAT (wb) | 58.0 | THC | 104.0 | 104.0 | 117.2 | 100.3 | 100.3 | 113.0 | 96.1 | 96.1 | 108.3 | 91.5 | 91.5 | 103.1 | 86.4 | 86.4 | 97.4 |
| | | | SHC | 90.8 | 104.0 | 117.2 | 87.6 | 100.3 | 113.0 | 83.9 | 96.1 | 108.3 | 79.9 | 91.5 | 103.1 | 75.5 | 86.4 | 97.4 |
| | | | kW | 5.9 | | | 6.9 | | | 7.9 | | | 9.0 | | | 10.2 | | |
| | | 62.0 | THC | 104.1 | 104.1 | 121.8 | 100.4 | 100.4 | 117.4 | 96.2 | 96.2 | 112.5 | 91.6 | 91.6 | 107.1 | 86.5 | 86.5 | 101.2 |
| | | | SHC | 86.5 | 104.1 | 121.8 | 83.4 | 100.4 | 117.4 | 79.9 | 96.2 | 112.5 | 76.1 | 91.6 | 107.1 | 71.9 | 86.5 | 101.2 |
| | | | kW | 5.9 | | | 6.9 | | | 7.9 | | | 9.0 | | | 10.2 | | |
| | | 67.0 | THC | 110.1 | 110.1 | 110.9 | 105.5 | 105.5 | 109.0 | 100.3 | 100.3 | 106.8 | 94.7 | 94.7 | 104.4 | 88.6 | 88.6 | 101.6 |
| | | | SHC | 70.8 | 90.9 | 110.9 | 69.0 | 89.0 | 109.0 | 66.9 | 86.9 | 106.8 | 64.7 | 84.5 | 104.4 | 62.1 | 81.9 | 101.6 |
| | | | kW | 6.0 | | | 6.9 | | | 8.0 | | | 9.1 | | | 10.2 | | |
| | | 72.0 | THC | 119.2 | 119.2 | 119.2 | 114.3 | 114.3 | 114.3 | 109.0 | 109.0 | 109.0 | 103.1 | 103.1 | 103.1 | – | – | – |
| | | | SHC | 50.5 | 70.7 | 90.8 | 48.8 | 68.9 | 89.1 | 46.9 | 67.0 | 87.2 | 44.9 | 65.0 | 85.1 | – | – | – |
| | | | kW | 6.1 | | | 7.0 | | | 8.0 | | | 9.1 | | | – | | |
| | | 76.0 | THC | – | – | – | – | – | – | – | – | – | – | – | – | – | – | – |
| | | | SHC | – | – | – | – | – | – | – | – | – | – | – | – | – | – | – |
| | | | kW | – | | | – | | | – | | | – | | | – | | |
| 4500 cfm | EAT (wb) | 58.0 | THC | 106.9 | 106.9 | 120.5 | 103.0 | 103.0 | 116.0 | 98.7 | 98.7 | 111.2 | 93.9 | 93.9 | 105.8 | 88.6 | 88.6 | 99.9 |
| | | | SHC | 93.3 | 106.9 | 120.5 | 89.9 | 103.0 | 116.0 | 86.2 | 98.7 | 111.2 | 82.0 | 93.9 | 105.8 | 77.4 | 88.6 | 99.9 |
| | | | kW | 6.0 | | | 6.9 | | | 7.9 | | | 9.1 | | | 10.2 | | |
| | | 62.0 | THC | 107.0 | 107.0 | 125.1 | 103.1 | 103.1 | 120.5 | 98.8 | 98.8 | 115.5 | 94.0 | 94.0 | 109.9 | 88.7 | 88.7 | 103.7 |
| | | | SHC | 88.9 | 107.0 | 125.1 | 85.6 | 103.1 | 120.5 | 82.0 | 98.8 | 115.5 | 78.1 | 94.0 | 109.9 | 73.7 | 88.7 | 103.7 |
| | | | kW | 6.0 | | | 6.9 | | | 7.9 | | | 9.1 | | | 10.2 | | |
| | | 67.0 | THC | 111.3 | 111.3 | 118.6 | 106.6 | 106.6 | 116.6 | 101.5 | 101.5 | 114.3 | 95.8 | 95.8 | 111.6 | 89.6 | 89.6 | 108.3 |
| | | | SHC | 74.3 | 96.5 | 118.6 | 72.4 | 94.5 | 116.6 | 70.3 | 92.3 | 114.3 | 67.9 | 89.7 | 111.6 | 65.2 | 86.7 | 108.3 |
| | | | kW | 6.0 | | | 6.9 | | | 8.0 | | | 9.1 | | | 10.2 | | |
| | | 72.0 | THC | 120.5 | 120.5 | 120.5 | 115.4 | 115.4 | 115.4 | 110.0 | 110.0 | 110.0 | – | – | – | – | – | – |
| | | | SHC | 51.9 | 74.3 | 96.7 | 50.2 | 72.5 | 94.9 | 48.3 | 70.7 | 93.0 | – | – | – | – | – | – |
| | | | kW | 6.1 | | | 7.0 | | | 8.0 | | | – | | | – | | |
| | | 76.0 | THC | – | – | – | – | – | – | – | – | – | – | – | – | – | – | – |
| | | | SHC | – | – | – | – | – | – | – | – | – | – | – | – | – | – | – |
| | | | kW | – | | | – | | | – | | | – | | | – | | |
| 5000 cfm | EAT (wb) | 58.0 | THC | 109.3 | 109.3 | 123.1 | 105.3 | 105.3 | 118.6 | 100.8 | 100.8 | 113.6 | 95.9 | 95.9 | 108.1 | 90.5 | 90.5 | 102.0 |
| | | | SHC | 95.4 | 109.3 | 123.1 | 91.9 | 105.3 | 118.6 | 88.0 | 100.8 | 113.6 | 83.8 | 95.9 | 108.1 | 79.0 | 90.5 | 102.0 |
| | | | kW | 6.0 | | | 6.9 | | | 8.0 | | | 9.1 | | | 10.2 | | |
| | | 62.0 | THC | 109.3 | 109.3 | 127.8 | 105.3 | 105.3 | 123.2 | 100.9 | 100.9 | 118.0 | 96.0 | 96.0 | 112.2 | 90.6 | 90.6 | 105.9 |
| | | | SHC | 90.8 | 109.3 | 127.8 | 87.5 | 105.3 | 123.2 | 83.8 | 100.9 | 118.0 | 79.7 | 96.0 | 112.2 | 75.2 | 90.6 | 105.9 |
| | | | kW | 6.0 | | | 6.9 | | | 8.0 | | | 9.1 | | | 10.2 | | |
| | | 67.0 | THC | 112.4 | 112.4 | 125.8 | 107.7 | 107.7 | 123.6 | 102.5 | 102.5 | 121.0 | 96.8 | 96.8 | 117.8 | 90.7 | 90.7 | 113.7 |
| | | | SHC | 77.6 | 101.7 | 125.8 | 75.6 | 99.6 | 123.6 | 73.4 | 97.2 | 121.0 | 70.8 | 94.3 | 117.8 | 67.7 | 90.7 | 113.7 |
| | | | kW | 6.0 | | | 7.0 | | | 8.0 | | | 9.1 | | | 10.2 | | |
| | | 72.0 | THC | 121.5 | 121.5 | 121.5 | 116.4 | 116.4 | 116.4 | – | – | – | – | – | – | – | – | – |
| | | | SHC | 53.3 | 77.9 | 102.4 | 51.5 | 76.1 | 100.6 | – | – | – | – | – | – | – | – | – |
| | | | kW | 6.1 | | | 7.0 | | | – | | | – | | | – | | |
| | | 76.0 | THC | – | – | – | – | – | – | – | – | – | – | – | – | – | – | – |
| | | | SHC | – | – | – | – | – | – | – | – | – | – | – | – | – | – | – |
| | | | kW | – | | | – | | | – | | | – | | | – | | |

**LEGEND:**

– = Do not operate
L/s = Liters per second
EAT(wb) = Entering air temp (wet bulb)
kW = Compressor kilowatts
SHC = Sensible heat capacity (Gross)
THC = Total heat capacity (Gross)
EAT(db) = Entering air temp (dry bulb)
Cfm = Cubic feet per minute (supply air)

38AU

# PERFORMANCE DATA (cont.)

## 38AUD14 - 40RUA14 COMBINATION RATINGS SI

| | | | | Ambient Temperature | | | | | | | | | | | | | | |
|---|---|---|---|---|---|---|---|---|---|---|---|---|---|---|---|---|---|---|
| | | | | 29.4 | | | 35.0 | | | 40.6 | | | 46.1 | | | 51.7 | | |
| | | | | EAT (db) | | | EAT (db) | | | EAT (db) | | | EAT (db) | | | EAT (db) | | |
| | | | | 23.9 | 26.7 | 29.4 | 23.9 | 26.7 | 29.4 | 23.9 | 26.7 | 29.4 | 23.9 | 26.7 | 29.4 | 23.9 | 26.7 | 29.4 |
| 1699 L/S | EAT (wb) | 14.4 | THC | 34.2 | 34.2 | 38.5 | 33.0 | 33.0 | 37.2 | 31.7 | 31.7 | 35.7 | 30.2 | 30.2 | 34.0 | 28.5 | 28.5 | 32.1 |
| | | | SHC | 29.8 | 34.2 | 38.5 | 28.8 | 33.0 | 37.2 | 27.6 | 31.7 | 35.7 | 26.3 | 30.2 | 34.0 | 24.9 | 28.5 | 32.1 |
| | | | kW | | 8.1 | | | 9.2 | | | 10.4 | | | 11.6 | | | 12.9 | |
| | | 16.7 | THC | 34.8 | 34.8 | 38.3 | 33.4 | 33.4 | 37.5 | 31.9 | 31.9 | 36.6 | 30.2 | 30.2 | 35.3 | 28.5 | 28.5 | 33.3 |
| | | | SHC | 27.6 | 33.0 | 38.3 | 26.9 | 32.2 | 37.5 | 26.1 | 31.4 | 36.6 | 25.1 | 30.2 | 35.3 | 23.7 | 28.5 | 33.3 |
| | | | kW | | 8.1 | | | 9.2 | | | 10.4 | | | 11.6 | | | 12.9 | |
| | | 19.4 | THC | 37.5 | 37.5 | 37.5 | 36.0 | 36.0 | 36.0 | 34.3 | 34.3 | 34.3 | 32.4 | 32.4 | 32.4 | 30.3 | 30.3 | 30.3 |
| | | | SHC | 22.2 | 27.7 | 33.1 | 21.6 | 27.0 | 32.4 | 20.9 | 26.3 | 31.7 | 20.2 | 25.6 | 31.0 | 19.3 | 24.7 | 30.1 |
| | | | kW | | 8.3 | | | 9.4 | | | 10.6 | | | 11.8 | | | 13.1 | |
| | | 22.2 | THC | 40.7 | 40.7 | 40.7 | 38.8 | 38.8 | 38.8 | 37.0 | 37.0 | 37.0 | 35.1 | 35.1 | 35.1 | 32.9 | 32.9 | 32.9 |
| | | | SHC | 16.7 | 22.2 | 27.6 | 16.0 | 21.5 | 26.9 | 15.4 | 20.8 | 26.2 | 14.7 | 20.1 | 25.5 | 13.9 | 19.3 | 24.7 |
| | | | kW | | 8.5 | | | 9.6 | | | 10.7 | | | 12.0 | | | 13.3 | |
| | | 24.4 | THC | – | 43.6 | 43.6 | – | – | – | – | – | – | – | – | – | – | – | – |
| | | | SHC | – | 17.7 | 23.3 | – | – | – | – | – | – | – | – | – | – | – | – |
| | | | kW | | 8.7 | | | – | | | – | | | – | | | – | |
| 1982 L/S | EAT (wb) | 14.4 | THC | 35.6 | 35.6 | 40.1 | 34.3 | 34.3 | 38.7 | 32.9 | 32.9 | 37.1 | 31.4 | 31.4 | 35.3 | 29.6 | 29.6 | 33.3 |
| | | | SHC | 31.1 | 35.6 | 40.1 | 30.0 | 34.3 | 38.7 | 28.8 | 32.9 | 37.1 | 27.4 | 31.4 | 35.3 | 25.8 | 29.6 | 33.3 |
| | | | kW | | 8.2 | | | 9.3 | | | 10.5 | | | 11.7 | | | 13.0 | |
| | | 16.7 | THC | 35.7 | 35.7 | 41.6 | 34.4 | 34.4 | 40.2 | 33.0 | 33.0 | 38.5 | 31.4 | 31.4 | 36.7 | 29.6 | 29.6 | 34.6 |
| | | | SHC | 29.5 | 35.6 | 41.6 | 28.5 | 34.4 | 40.2 | 27.4 | 33.0 | 38.5 | 26.1 | 31.4 | 36.7 | 24.6 | 29.6 | 34.6 |
| | | | kW | | 8.2 | | | 9.3 | | | 10.5 | | | 11.7 | | | 13.0 | |
| | | 19.4 | THC | 38.2 | 38.2 | 38.2 | 36.6 | 36.6 | 36.6 | 34.9 | 34.9 | 34.9 | 33.0 | 33.0 | 33.9 | 30.8 | 30.8 | 33.0 |
| | | | SHC | 23.6 | 29.8 | 36.1 | 22.9 | 29.2 | 35.4 | 22.3 | 28.5 | 34.7 | 21.5 | 27.7 | 33.9 | 20.6 | 26.8 | 33.0 |
| | | | kW | | 8.4 | | | 9.4 | | | 10.6 | | | 11.8 | | | 13.1 | |
| | | 22.2 | THC | 41.5 | 41.5 | 41.5 | 39.5 | 39.5 | 39.5 | 37.6 | 37.6 | 37.6 | 35.6 | 35.6 | 35.6 | 33.3 | 33.3 | 33.3 |
| | | | SHC | 17.3 | 23.5 | 29.8 | 16.6 | 22.8 | 29.1 | 15.9 | 22.2 | 28.4 | 15.2 | 21.4 | 27.7 | 14.4 | 20.6 | 26.9 |
| | | | kW | | 8.6 | | | 9.6 | | | 10.8 | | | 12.0 | | | 13.3 | |
| | | 24.4 | THC | – | – | – | – | – | – | – | – | – | – | – | – | – | – | – |
| | | | SHC | – | – | – | – | – | – | – | – | – | – | – | – | – | – | – |
| | | | kW | | – | | | – | | | – | | | – | | | – | |
| 2265 L/S | EAT (wb) | 14.4 | THC | 36.7 | 36.7 | 41.4 | 35.4 | 35.4 | 39.9 | 33.9 | 33.9 | 38.2 | 32.3 | 32.3 | 36.4 | 30.5 | 30.5 | 34.3 |
| | | | SHC | 32.1 | 36.7 | 41.4 | 30.9 | 35.4 | 39.9 | 29.6 | 33.9 | 38.2 | 28.2 | 32.3 | 36.4 | 26.6 | 30.5 | 34.3 |
| | | | kW | | 8.3 | | | 9.4 | | | 10.5 | | | 11.8 | | | 13.1 | |
| | | 16.7 | THC | 36.8 | 36.8 | 43.0 | 35.4 | 35.4 | 41.4 | 34.0 | 34.0 | 39.7 | 32.3 | 32.3 | 37.8 | 30.5 | 30.5 | 35.6 |
| | | | SHC | 30.5 | 36.8 | 43.0 | 29.4 | 35.4 | 41.4 | 28.2 | 34.0 | 39.7 | 26.8 | 32.3 | 37.8 | 25.3 | 30.5 | 35.6 |
| | | | kW | | 8.3 | | | 9.4 | | | 10.5 | | | 11.8 | | | 13.1 | |
| | | 19.4 | THC | 38.7 | 38.7 | 39.0 | 37.1 | 37.1 | 38.2 | 35.3 | 35.3 | 37.5 | 33.4 | 33.4 | 36.7 | 31.2 | 31.2 | 35.7 |
| | | | SHC | 24.9 | 31.9 | 39.0 | 24.2 | 31.2 | 38.2 | 23.5 | 30.5 | 37.5 | 22.7 | 29.7 | 36.7 | 21.8 | 28.8 | 35.7 |
| | | | kW | | 8.4 | | | 9.5 | | | 10.6 | | | 11.9 | | | 13.1 | |
| | | 22.2 | THC | 42.1 | 42.1 | 42.1 | 39.9 | 39.9 | 39.9 | 38.0 | 38.0 | 38.0 | 36.0 | 36.0 | 36.0 | – | – | – |
| | | | SHC | 17.8 | 24.9 | 32.0 | 17.1 | 24.1 | 31.2 | 16.4 | 23.4 | 30.5 | 15.7 | 22.7 | 29.8 | – | – | – |
| | | | kW | | | | | | | | | | | | | | | |
| | | 24.4 | THC | – | – | – | – | – | – | – | – | – | – | – | – | – | – | – |
| | | | SHC | – | – | – | – | – | – | – | – | – | – | – | – | – | – | – |
| | | | kW | | – | | | – | | | – | | | – | | | – | |
| 2549 L/S | EAT (wb) | 14.4 | THC | 37.7 | 37.7 | 42.4 | 36.3 | 36.3 | 40.9 | 34.8 | 34.8 | 39.2 | 33.1 | 33.1 | 37.3 | 31.2 | 31.2 | 35.1 |
| | | | SHC | 32.9 | 37.7 | 42.4 | 31.7 | 36.3 | 40.9 | 30.4 | 34.8 | 39.2 | 28.9 | 33.1 | 37.3 | 27.2 | 31.2 | 35.1 |
| | | | kW | | 8.3 | | | 9.4 | | | 10.6 | | | 11.9 | | | 13.1 | |
| | | 16.7 | THC | 37.7 | 37.7 | 44.1 | 36.3 | 36.3 | 42.4 | 34.8 | 34.8 | 40.7 | 33.1 | 33.1 | 38.7 | 31.2 | 31.2 | 36.5 |
| | | | SHC | 31.3 | 37.7 | 44.1 | 30.2 | 36.3 | 42.4 | 28.9 | 34.8 | 40.7 | 27.5 | 33.1 | 38.7 | 25.9 | 31.2 | 36.5 |
| | | | kW | | 8.3 | | | 9.4 | | | 10.6 | | | 11.9 | | | 13.1 | |
| | | 19.4 | THC | 39.2 | 39.2 | 41.6 | 37.5 | 37.5 | 40.9 | 35.7 | 35.7 | 40.1 | 33.7 | 33.7 | 39.2 | 31.5 | 31.5 | 38.0 |
| | | | SHC | 26.1 | 33.9 | 41.6 | 25.4 | 33.1 | 40.9 | 24.7 | 32.4 | 40.1 | 23.9 | 31.5 | 39.2 | 22.9 | 30.5 | 38.0 |
| | | | kW | | 8.4 | | | 9.5 | | | 10.7 | | | 11.9 | | | 13.2 | |
| | | 22.2 | THC | 42.6 | 42.6 | 42.6 | 40.3 | 40.3 | 40.3 | 38.4 | 38.4 | 38.4 | – | – | – | – | – | – |
| | | | SHC | 18.3 | 26.2 | 34.0 | 17.5 | 25.4 | 33.2 | 16.9 | 24.7 | 32.6 | – | – | – | – | – | – |
| | | | kW | | 8.7 | | | 9.7 | | 10.8 | | | | – | | | – | |
| | | 24.4 | THC | – | – | – | – | – | – | – | – | – | – | – | – | – | – | – |
| | | | SHC | – | – | – | – | – | – | – | – | – | – | – | – | – | – | – |
| | | | kW | | – | | | – | | | – | | | – | | | – | |
| 2832 L/S | EAT (wb) | 14.4 | THC | 38.5 | 38.5 | 43.3 | 37.0 | 37.0 | 41.7 | 35.5 | 35.5 | 40.0 | 33.7 | 33.7 | 38.0 | 31.8 | 31.8 | 35.8 |
| | | | SHC | 33.6 | 38.5 | 43.3 | 32.3 | 37.0 | 41.7 | 31.0 | 35.5 | 40.0 | 29.5 | 33.7 | 38.0 | 27.8 | 31.8 | 35.8 |
| | | | kW | | 8.4 | | | 9.5 | | | 10.7 | | | 11.9 | | | 13.2 | |
| | | 16.7 | THC | 38.5 | 38.5 | 45.0 | 37.0 | 37.0 | 43.3 | 35.5 | 35.5 | 41.5 | 33.8 | 33.8 | 39.5 | 31.8 | 31.8 | 37.2 |
| | | | SHC | 32.0 | 38.5 | 45.0 | 30.8 | 37.0 | 43.3 | 29.5 | 35.5 | 41.5 | 28.0 | 33.8 | 39.5 | 26.4 | 31.8 | 37.2 |
| | | | kW | 8.4 | | | 9.5 | | | 10.7 | | | 11.9 | | | | 13.2 | |
| | | 19.4 | THC | 39.6 | 39.6 | 44.2 | 37.8 | 37.8 | 43.4 | 36.0 | 36.0 | 42.5 | 34.0 | 34.0 | 41.4 | 31.8 | 31.8 | 39.9 |
| | | | SHC | 27.3 | 35.7 | 44.2 | 26.5 | 35.0 | 43.4 | 25.8 | 34.1 | 42.5 | 24.9 | 33.1 | 41.4 | 23.8 | 31.8 | 39.9 |
| | | | kW | | 8.5 | | | 9.5 | | | 10.7 | | | 11.9 | | | 13.2 | |
| | | 22.2 | THC | 43.0 | 43.0 | 43.0 | 40.7 | 40.7 | 40.7 | – | – | – | – | – | – | – | – | – |
| | | | SHC | 18.8 | 27.4 | 36.0 | 18.0 | 26.6 | 35.3 | – | – | – | – | – | – | – | – | – |
| | | | kW | 8.7 | | | | 9.7 | | | – | | | – | | | – | |
| | | 24.4 | THC | – | – | – | – | – | – | – | – | – | – | – | – | – | – | – |
| | | | SHC | – | – | – | – | – | – | – | – | – | – | – | – | – | – | – |
| | | | kW | | – | | | – | | | – | | | – | | | – | |

**LEGEND:**

– = Do not operate
L/s = Liters per second
EAT(wb) = Entering air temp (wet bulb)
kW = Compressor kilowatts
SHC = Sensible heat capacity (Gross)
THC = Total heat capacity (Gross)
EAT(db) = Entering air temp (dry bulb)
Cfm = Cubic feet per minute (supply air)

# PERFORMANCE DATA (cont.)

**38AUD14 - 40RUA14** **COMBINATION RATINGS** **ENGLISH**

| | | | | Ambient Temperature | | | | | | | | | | | | | | |
|---|---|---|---|---|---|---|---|---|---|---|---|---|---|---|---|---|---|---|
| | | | | 85.0 | | | 95.0 | | | 105.0 | | | 115.0 | | | 125.0 | | |
| | | | | EAT (db) | | | EAT (db) | | | EAT (db) | | | EAT (db) | | | EAT (db) | | |
| | | | | 75.0 | 80.0 | 85.0 | 75.0 | 80.0 | 85.0 | 75.0 | 80.0 | 85.0 | 75.0 | 80.0 | 85.0 | 75.0 | 80.0 | 85.0 |
| 3600 cfm | EAT (wb) | 58.0 | THC | 116.6 | 116.6 | 131.3 | 112.5 | 112.5 | 126.8 | 108.0 | 108.0 | 121.7 | 102.9 | 102.9 | 115.9 | 97.1 | 97.1 | 109.4 |
| | | | SHC | 101.8 | 116.6 | 131.3 | 98.2 | 112.5 | 126.8 | 94.3 | 108.0 | 121.7 | 89.8 | 102.9 | 115.9 | 84.8 | 97.1 | 109.4 |
| | | | kW | 8.1 | | | 9.2 | | | 10.4 | | | 11.6 | | | 12.9 | | |
| | | 62.0 | THC | 118.8 | 118.8 | 130.6 | 114.0 | 114.0 | 128.0 | 108.7 | 108.7 | 124.9 | 103.0 | 103.0 | 120.4 | 97.2 | 97.2 | 113.7 |
| | | | SHC | 94.3 | 112.5 | 130.6 | 91.9 | 110.0 | 128.0 | 89.1 | 107.0 | 124.9 | 85.5 | 103.0 | 120.4 | 80.7 | 97.2 | 113.7 |
| | | | kW | 8.1 | | | 9.2 | | | 10.4 | | | 11.6 | | | 12.9 | | |
| | | 67.0 | THC | 128.0 | 128.0 | 128.0 | 122.8 | 122.8 | 122.8 | 117.1 | 117.1 | 117.1 | 110.6 | 110.6 | 110.6 | 103.4 | 103.4 | 103.4 |
| | | | SHC | 75.9 | 94.4 | 112.8 | 73.8 | 92.2 | 110.7 | 71.4 | 89.9 | 108.3 | 68.9 | 87.3 | 105.7 | 66.0 | 84.4 | 102.8 |
| | | | kW | 8.3 | | | 9.4 | | | 10.6 | | | 11.8 | | | 13.1 | | |
| | | 72.0 | THC | 138.8 | 138.8 | 138.8 | 132.5 | 132.5 | 132.5 | 126.4 | 126.4 | 126.4 | 119.7 | 119.7 | 119.7 | 112.1 | 112.1 | 112.1 |
| | | | SHC | 57.0 | 75.6 | 94.1 | 54.6 | 73.2 | 91.8 | 52.4 | 71.0 | 89.5 | 50.0 | 68.5 | 87.1 | 47.3 | 65.8 | 84.3 |
| | | | kW | 8.5 | | | 9.6 | | | 10.7 | | | 12.0 | | | 13.3 | | |
| | | 76.0 | THC | – | 148.6 | 148.6 | – | – | – | – | – | – | – | – | – | – | – | – |
| | | | SHC | – | 60.5 | 79.4 | – | – | – | – | – | – | – | – | – | – | – | – |
| | | | kW | 8.7 | | | – | | | – | | | – | | | – | | |
| 4200 cfm | EAT (wb) | 58.0 | THC | 121.4 | 121.4 | 136.8 | 117.1 | 117.1 | 131.9 | 112.3 | 112.3 | 126.6 | 107.0 | 107.0 | 120.6 | 100.9 | 100.9 | 113.7 |
| | | | SHC | 106.0 | 121.4 | 136.8 | 102.2 | 117.1 | 131.9 | 98.1 | 112.3 | 126.6 | 93.4 | 107.0 | 120.6 | 88.1 | 100.9 | 113.7 |
| | | | kW | 8.2 | | | 9.3 | | | 10.5 | | | 11.7 | | | 13.0 | | |
| | | 62.0 | THC | 121.8 | 121.8 | 141.8 | 117.3 | 117.3 | 137.1 | 112.5 | 112.5 | 131.5 | 107.1 | 107.1 | 125.2 | 101.0 | 101.0 | 118.1 |
| | | | SHC | 100.8 | 121.3 | 141.8 | 97.4 | 117.3 | 137.1 | 93.4 | 112.5 | 131.5 | 88.9 | 107.1 | 125.2 | 83.9 | 101.0 | 118.1 |
| | | | kW | 8.2 | | | 9.3 | | | 10.5 | | | 11.7 | | | 13.0 | | |
| | | 67.0 | THC | 130.4 | 130.4 | 130.4 | 124.9 | 124.9 | 124.9 | 119.1 | 119.1 | 119.1 | 112.5 | 112.5 | 115.8 | 105.0 | 105.0 | 112.6 |
| | | | SHC | 80.5 | 101.8 | 123.1 | 78.3 | 99.6 | 120.8 | 76.0 | 97.2 | 118.5 | 73.4 | 94.6 | 115.8 | 70.4 | 91.5 | 112.6 |
| | | | kW | 8.4 | | | 9.4 | | | 10.6 | | | 11.8 | | | 13.1 | | |
| | | 72.0 | THC | 141.6 | 141.6 | 141.6 | 134.7 | 134.7 | 134.7 | 128.4 | 128.4 | 128.4 | 121.5 | 121.5 | 121.5 | 113.7 | 113.7 | 113.7 |
| | | | SHC | 59.0 | 80.3 | 101.7 | 56.5 | 77.8 | 99.2 | 54.2 | 75.6 | 97.0 | 51.8 | 73.1 | 94.5 | 49.0 | 70.4 | 91.7 |
| | | | kW | 8.6 | | | 9.6 | | | 10.8 | | | 12.0 | | | 13.3 | | |
| | | 76.0 | THC | – | – | – | – | – | – | – | – | – | – | – | – | – | – | – |
| | | | SHC | – | – | – | – | – | – | – | – | – | – | – | – | – | – | – |
| | | | kW | – | | | – | | | – | | | – | | | – | | |
| 4800 cfm | EAT (wb) | 58.0 | THC | 125.3 | 125.3 | 141.2 | 120.8 | 120.8 | 136.1 | 115.8 | 115.8 | 130.5 | 110.2 | 110.2 | 124.2 | 103.9 | 103.9 | 117.1 |
| | | | SHC | 109.4 | 125.3 | 141.2 | 105.4 | 120.8 | 136.1 | 101.1 | 115.8 | 130.5 | 96.3 | 110.2 | 124.2 | 90.7 | 103.9 | 117.1 |
| | | | kW | 8.3 | | | 9.4 | | | 10.5 | | | 11.8 | | | 13.1 | | |
| | | 62.0 | THC | 125.5 | 125.5 | 146.7 | 120.9 | 120.9 | 141.3 | 115.9 | 115.9 | 135.6 | 110.3 | 110.3 | 129.0 | 104.0 | 104.0 | 121.6 |
| | | | SHC | 104.2 | 125.4 | 146.7 | 100.4 | 120.9 | 141.3 | 96.3 | 115.9 | 135.6 | 91.6 | 110.3 | 129.0 | 86.4 | 104.0 | 121.6 |
| | | | kW | 8.3 | | | 9.4 | | | 10.5 | | | 11.8 | | | 13.1 | | |
| | | 67.0 | THC | 132.2 | 132.2 | 132.9 | 126.5 | 126.5 | 130.5 | 120.6 | 120.6 | 128.0 | 113.9 | 113.9 | 125.1 | 106.4 | 106.4 | 121.7 |
| | | | SHC | 84.9 | 108.9 | 132.9 | 82.6 | 106.6 | 130.5 | 80.2 | 104.1 | 128.0 | 77.5 | 101.3 | 125.1 | 74.5 | 98.1 | 121.7 |
| | | | kW | 8.4 | | | 9.5 | | | 10.6 | | | 11.9 | | | 13.1 | | |
| | | 72.0 | THC | 143.8 | 143.8 | 143.8 | 136.3 | 136.3 | 136.3 | 129.8 | 129.8 | 129.8 | 122.8 | 122.8 | 122.8 | – | – | – |
| | | | SHC | 60.8 | 84.9 | 109.1 | 58.2 | 82.3 | 106.4 | 55.9 | 80.0 | 104.1 | 53.5 | 77.6 | 101.7 | – | – | – |
| | | | kW | 8.6 | | | 9.7 | | | 10.8 | | | 12.1 | | | – | | |
| | | 76.0 | THC | – | – | – | – | – | – | – | – | – | – | – | – | – | – | – |
| | | | SHC | – | – | – | – | – | – | – | – | – | – | – | – | – | – | – |
| | | | kW | – | | | – | | | – | | | – | | | – | | |
| 5400 cfm | EAT (wb) | 58.0 | THC | 128.5 | 128.5 | 144.8 | 123.8 | 123.8 | 139.5 | 118.7 | 118.7 | 133.8 | 112.9 | 112.9 | 127.2 | 106.4 | 106.4 | 119.9 |
| | | | SHC | 112.2 | 128.5 | 144.8 | 108.1 | 123.8 | 139.5 | 103.6 | 118.7 | 133.8 | 98.6 | 112.9 | 127.2 | 92.9 | 106.4 | 119.9 |
| | | | kW | 8.3 | | | 9.4 | | | 10.6 | | | 11.9 | | | 13.1 | | |
| | | 62.0 | THC | 128.6 | 128.6 | 150.4 | 123.9 | 123.9 | 144.8 | 118.8 | 118.8 | 138.9 | 113.0 | 113.0 | 132.1 | 106.4 | 106.4 | 124.5 |
| | | | SHC | 106.8 | 128.6 | 150.4 | 102.9 | 123.9 | 144.8 | 98.7 | 118.8 | 138.9 | 93.8 | 113.0 | 132.1 | 88.4 | 106.4 | 124.5 |
| | | | kW | 8.3 | | | 9.4 | | | 10.6 | | | 11.9 | | | 13.1 | | |
| | | 67.0 | THC | 133.7 | 133.7 | 142.1 | 127.8 | 127.8 | 139.5 | 121.8 | 121.8 | 136.9 | 115.0 | 115.0 | 133.7 | 107.5 | 107.5 | 129.8 |
| | | | SHC | 89.1 | 115.6 | 142.1 | 86.7 | 113.1 | 139.5 | 84.2 | 110.6 | 136.9 | 81.4 | 107.6 | 133.7 | 78.1 | 103.9 | 129.8 |
| | | | kW | 8.4 | | | 9.5 | | | 10.7 | | | 11.9 | | | 13.2 | | |
| | | 72.0 | THC | 145.3 | 145.3 | 145.3 | 137.6 | 137.6 | 137.6 | 130.9 | 130.9 | 130.9 | – | – | – | – | – | – |
| | | | SHC | 62.5 | 89.3 | 116.1 | 59.8 | 86.6 | 113.4 | 57.5 | 84.3 | 111.1 | – | – | – | – | – | – |
| | | | kW | 8.7 | | | 9.7 | | | 10.8 | | | – | | | – | | |
| | | 76.0 | THC | – | – | – | – | – | – | – | – | – | – | – | – | – | – | – |
| | | | SHC | – | – | – | – | – | – | – | – | – | – | – | – | – | – | – |
| | | | kW | – | | | – | | | – | | | – | | | – | | |
| 6000 cfm | EAT (wb) | 58.0 | THC | 131.2 | 131.2 | 147.9 | 126.3 | 126.3 | 142.3 | 121.0 | 121.0 | 136.4 | 115.1 | 115.1 | 129.7 | 108.4 | 108.4 | 122.2 |
| | | | SHC | 114.6 | 131.2 | 147.9 | 110.3 | 126.3 | 142.3 | 105.7 | 121.0 | 136.4 | 100.5 | 115.1 | 129.7 | 94.7 | 108.4 | 122.2 |
| | | | kW | 8.4 | | | 9.5 | | | 10.7 | | | 11.9 | | | 13.2 | | |
| | | 62.0 | THC | 131.3 | 131.3 | 153.6 | 126.4 | 126.4 | 147.8 | 121.1 | 121.1 | 141.6 | 115.2 | 115.2 | 134.7 | 108.5 | 108.5 | 126.8 |
| | | | SHC | 109.1 | 131.3 | 153.6 | 105.0 | 126.4 | 147.8 | 100.6 | 121.1 | 141.6 | 95.7 | 115.2 | 134.7 | 90.1 | 108.5 | 126.8 |
| | | | kW | 8.4 | | | 9.5 | | | 10.7 | | | 11.9 | | | 13.2 | | |
| | | 67.0 | THC | 135.0 | 135.0 | 150.8 | 128.9 | 128.9 | 148.0 | 122.8 | 122.8 | 145.0 | 116.1 | 116.1 | 141.3 | 108.6 | 108.6 | 136.2 |
| | | | SHC | 93.0 | 121.9 | 150.8 | 90.5 | 119.3 | 148.0 | 87.9 | 116.5 | 145.0 | 84.8 | 113.0 | 141.3 | 81.1 | 108.6 | 136.2 |
| | | | kW | 8.5 | | | 9.5 | | | 10.7 | | | 11.9 | | | 13.2 | | |
| | | 72.0 | THC | 146.6 | 146.6 | 146.6 | 138.8 | 138.8 | 138.8 | – | – | – | – | – | – | – | – | – |
| | | | SHC | 64.2 | 93.6 | 123.0 | 61.5 | 90.9 | 120.3 | – | – | – | – | – | – | – | – | – |
| | | | kW | 8.7 | | | 9.7 | | | – | | | – | | | – | | |
| | | 76.0 | THC | – | – | – | – | – | – | – | – | – | – | – | – | – | – | – |
| | | | SHC | – | – | – | – | – | – | – | – | – | – | – | – | – | – | – |
| | | | kW | – | | | – | | | – | | | – | | | – | | |

**LEGEND:**

– = Do not operate
L/s = Liters per second
EAT(wb) = Entering air temp (wet bulb)
kW = Compressor kilowatts
SHC = Sensible heat capacity (Gross)
THC = Total heat capacity (Gross)
EAT(db) = Entering air temp (dry bulb)
Cfm = Cubic feet per minute (supply air)

38AU

# PERFORMANCE DATA (cont.)

**38AUD16 - 40RUA16** **COMBINATION RATINGS** **SI**

| | | | | Ambient Temperature | | | | | | | | | | | | | | |
|---|---|---|---|---|---|---|---|---|---|---|---|---|---|---|---|---|---|---|
| | | | | 29.4 | | | 35.0 | | | 40.6 | | | 46.1 | | | 51.7 | | |
| | | | | EAT (db) | | | EAT (db) | | | EAT (db) | | | EAT (db) | | | EAT (db) | | |
| | | | | 23.9 | 26.7 | 29.4 | 23.9 | 26.7 | 29.4 | 23.9 | 26.7 | 29.4 | 23.9 | 26.7 | 29.4 | 23.9 | 26.7 | 29.4 |
| 2124 L/S | EAT (wb) | 14.4 | THC | 44.1 | 44.1 | 49.7 | 42.6 | 42.6 | 48.0 | 40.9 | 40.9 | 46.1 | 39.2 | 39.2 | 44.2 | 37.3 | 37.3 | 42.0 |
| | | | SHC | 38.5 | 44.1 | 49.7 | 37.2 | 42.6 | 48.0 | 35.8 | 40.9 | 46.1 | 34.2 | 39.2 | 44.2 | 32.5 | 37.3 | 42.0 |
| | | | kW | | 9.7 | | | 10.9 | | | 12.3 | | | 13.8 | | | 15.4 | |
| | | 16.7 | THC | 45.3 | 45.3 | 49.0 | 43.4 | 43.4 | 48.0 | 41.4 | 41.4 | 46.9 | 39.4 | 39.4 | 45.4 | 37.3 | 37.3 | 43.6 |
| | | | SHC | 35.5 | 42.3 | 49.0 | 34.6 | 41.3 | 48.0 | 33.6 | 40.3 | 46.9 | 32.4 | 38.9 | 45.4 | 31.0 | 37.3 | 43.6 |
| | | | kW | | 9.7 | | | 10.9 | | | 12.3 | | | 13.8 | | | 15.4 | |
| | | 19.4 | THC | 49.2 | 49.2 | 49.2 | 47.1 | 47.1 | 47.1 | 44.9 | 44.9 | 44.9 | 42.6 | 42.6 | 42.6 | 40.0 | 40.0 | 40.0 |
| | | | SHC | 28.8 | 35.6 | 42.5 | 28.0 | 34.8 | 41.6 | 27.1 | 33.9 | 40.7 | 26.1 | 32.9 | 39.7 | 25.1 | 31.9 | 38.7 |
| | | | kW | | 9.9 | | | 11.1 | | | 12.4 | | | 13.9 | | | 15.5 | |
| | | 22.2 | THC | 53.3 | 53.3 | 53.3 | 51.1 | 51.1 | 51.1 | 48.8 | 48.8 | 48.8 | 46.2 | 46.2 | 46.2 | 43.5 | 43.5 | 43.5 |
| | | | SHC | 21.8 | 28.7 | 35.5 | 21.0 | 27.9 | 34.7 | 20.1 | 27.0 | 33.9 | 19.2 | 26.1 | 32.9 | 18.2 | 25.1 | 31.9 |
| | | | kW | | 10.1 | | | 11.3 | | | 12.6 | | | 14.1 | | | 15.6 | |
| | | 24.4 | THC | – | 56.7 | 56.7 | – | 54.5 | 54.5 | – | 52.0 | 52.0 | – | – | – | – | – | – |
| | | | SHC | – | 23.0 | 30.0 | – | 22.2 | 29.2 | – | 21.4 | 28.3 | – | – | – | – | – | – |
| | | | kW | | 10.3 | | | 11.5 | | | 12.8 | | | – | | | – | |
| 2478 L/S | EAT (wb) | 14.4 | THC | 46.1 | 46.1 | 52.0 | 44.5 | 44.5 | 50.1 | 42.8 | 42.8 | 48.2 | 40.9 | 40.9 | 46.0 | 38.8 | 38.8 | 43.7 |
| | | | SHC | 40.3 | 46.1 | 52.0 | 38.9 | 44.5 | 50.1 | 37.3 | 42.8 | 48.2 | 35.7 | 40.9 | 46.0 | 33.9 | 38.8 | 43.7 |
| | | | kW | | 9.8 | | | 11.0 | | | 12.4 | | | 13.8 | | | 15.4 | |
| | | 16.7 | THC | 46.5 | 46.5 | 53.3 | 44.7 | 44.7 | 51.7 | 42.8 | 42.8 | 50.0 | 40.9 | 40.9 | 47.8 | 38.8 | 38.8 | 45.4 |
| | | | SHC | 38.0 | 45.6 | 53.3 | 36.8 | 44.3 | 51.7 | 35.6 | 42.8 | 50.0 | 34.0 | 40.9 | 47.8 | 32.2 | 38.8 | 45.4 |
| | | | kW | | 9.8 | | | 11.0 | | | 12.4 | | | 13.8 | | | 15.4 | |
| | | 19.4 | THC | 50.2 | 50.2 | 50.2 | 48.1 | 48.1 | 48.1 | 45.8 | 45.8 | 45.8 | 43.3 | 43.3 | 43.5 | 40.7 | 40.7 | 42.4 |
| | | | SHC | 30.6 | 38.4 | 46.3 | 29.7 | 37.5 | 45.4 | 28.8 | 36.6 | 44.5 | 27.8 | 35.6 | 43.5 | 26.8 | 34.6 | 42.4 |
| | | | kW | | 10.0 | | | 11.2 | | | 12.5 | | | 13.9 | | | 15.5 | |
| | | 22.2 | THC | 54.3 | 54.3 | 54.3 | 52.1 | 52.1 | 52.1 | 49.6 | 49.6 | 49.6 | 47.0 | 47.0 | 47.0 | 44.2 | 44.2 | 44.2 |
| | | | SHC | 22.5 | 30.4 | 38.3 | 21.7 | 29.6 | 37.5 | 20.8 | 28.7 | 36.6 | 19.9 | 27.8 | 35.6 | 18.9 | 26.8 | 34.6 |
| | | | kW | | 10.2 | | | 11.4 | | | 12.7 | | | 14.1 | | | 15.7 | |
| | | 24.4 | THC | – | 57.8 | 57.8 | – | 55.4 | 55.4 | – | – | – | – | – | – | – | – | – |
| | | | SHC | – | 23.9 | 31.9 | – | 23.1 | 31.1 | – | – | – | – | – | – | – | – | – |
| | | | kW | | 10.4 | | | 11.6 | | | – | | | – | | | – | |
| 2832 L/S | EAT (wb) | 14.4 | THC | 47.8 | 47.8 | 53.8 | 46.1 | 46.1 | 51.9 | 44.2 | 44.2 | 49.8 | 42.2 | 42.2 | 47.6 | 40.0 | 40.0 | 45.1 |
| | | | SHC | 41.7 | 47.8 | 53.8 | 40.2 | 46.1 | 51.9 | 38.6 | 44.2 | 49.8 | 36.8 | 42.2 | 47.6 | 34.9 | 40.0 | 45.1 |
| | | | kW | | 9.9 | | | 11.1 | | | 12.4 | | | 13.9 | | | 15.5 | |
| | | 16.7 | THC | 47.8 | 47.8 | 55.9 | 46.1 | 46.1 | 53.9 | 44.3 | 44.3 | 51.7 | 42.2 | 42.2 | 49.4 | 40.0 | 40.0 | 46.8 |
| | | | SHC | 39.7 | 47.8 | 55.9 | 38.3 | 46.1 | 53.9 | 36.8 | 44.3 | 51.7 | 35.1 | 42.2 | 49.4 | 33.3 | 40.0 | 46.8 |
| | | | kW | | 9.9 | | | 11.1 | | | 12.4 | | | 13.9 | | | 15.5 | |
| | | 19.4 | THC | 50.9 | 50.9 | 50.9 | 48.8 | 48.8 | 49.0 | 46.4 | 46.4 | 48.1 | 43.9 | 43.9 | 47.0 | 41.2 | 41.2 | 45.8 |
| | | | SHC | 32.2 | 41.1 | 49.9 | 31.3 | 40.2 | 49.0 | 30.4 | 39.2 | 48.1 | 29.4 | 38.2 | 47.0 | 28.3 | 37.1 | 45.8 |
| | | | kW | | 10.0 | | | 11.2 | | | 12.5 | | | 14.0 | | | 15.5 | |
| | | 22.2 | THC | 55.1 | 55.1 | 55.1 | 52.8 | 52.8 | 52.8 | 50.3 | 50.3 | 50.3 | 47.6 | 47.6 | 47.6 | 44.7 | 44.7 | 44.7 |
| | | | SHC | 23.2 | 32.1 | 41.0 | 22.3 | 31.2 | 40.2 | 21.5 | 30.4 | 39.2 | 20.5 | 29.4 | 38.3 | 19.5 | 28.4 | 37.3 |
| | | | kW | | 10.2 | | | 11.4 | | | 12.7 | | | 14.2 | | | 15.7 | |
| | | 24.4 | THC | – | – | – | – | – | – | – | – | – | – | – | – | – | – | – |
| | | | SHC | – | – | – | – | – | – | – | – | – | – | – | – | – | – | – |
| | | | kW | | – | | | – | | | – | | | – | | | – | |
| 3186 L/S | EAT (wb) | 14.4 | THC | 49.1 | 49.1 | 55.4 | 47.3 | 47.3 | 53.3 | 45.4 | 45.4 | 51.1 | 43.3 | 43.3 | 48.8 | 41.0 | 41.0 | 46.2 |
| | | | SHC | 42.9 | 49.1 | 55.4 | 41.3 | 47.3 | 53.3 | 39.6 | 45.4 | 51.1 | 37.8 | 43.3 | 48.8 | 35.8 | 41.0 | 46.2 |
| | | | kW | | 9.9 | | | 11.1 | | | 12.5 | | | 13.9 | | | 15.5 | |
| | | 16.7 | THC | 49.2 | 49.2 | 57.5 | 47.4 | 47.4 | 55.4 | 45.4 | 45.4 | 53.1 | 43.3 | 43.3 | 50.6 | 41.0 | 41.0 | 47.9 |
| | | | SHC | 40.8 | 49.2 | 57.5 | 39.3 | 47.4 | 55.4 | 37.7 | 45.4 | 53.1 | 36.0 | 43.3 | 50.6 | 34.1 | 41.0 | 47.9 |
| | | | kW | | 9.9 | | | 11.1 | | | 12.5 | | | 13.9 | | | 15.5 | |
| | | 19.4 | THC | 51.5 | 51.5 | 53.4 | 49.3 | 49.3 | 52.5 | 47.0 | 47.0 | 51.4 | 44.4 | 44.4 | 50.3 | 41.7 | 41.7 | 49.0 |
| | | | SHC | 33.8 | 43.6 | 53.4 | 32.9 | 42.7 | 52.5 | 31.9 | 41.7 | 51.4 | 30.9 | 40.6 | 50.3 | 29.7 | 39.4 | 49.0 |
| | | | kW | | 10.0 | | | 11.2 | | | 12.6 | | | 14.0 | | | 15.6 | |
| | | 22.2 | THC | 55.7 | 55.7 | 55.7 | 53.3 | 53.3 | 53.3 | 50.8 | 50.8 | 50.8 | 48.0 | 48.0 | 48.0 | 45.0 | 45.0 | 45.0 |
| | | | SHC | 23.8 | 33.7 | 43.6 | 23.0 | 32.9 | 42.7 | 22.1 | 32.0 | 41.9 | 21.1 | 31.0 | 40.9 | 20.1 | 30.0 | 39.8 |
| | | | kW | | 10.3 | | | 11.4 | | | 12.8 | | | 14.2 | | | 15.7 | |
| | | 24.4 | THC | – | – | – | – | – | – | – | – | – | – | – | – | – | – | – |
| | | | SHC | – | – | – | – | – | – | – | – | – | – | – | – | – | – | – |
| | | | kW | | – | | | – | | | – | | | – | | | – | |
| 3540 L/S | EAT (wb) | 14.4 | THC | 50.2 | 50.2 | 56.6 | 48.4 | 48.4 | 54.5 | 46.4 | 46.4 | 52.3 | 44.2 | 44.2 | 49.8 | 41.8 | 41.8 | 47.1 |
| | | | SHC | 43.9 | 50.2 | 56.6 | 42.2 | 48.4 | 54.5 | 40.5 | 46.4 | 52.3 | 38.6 | 44.2 | 49.8 | 36.5 | 41.8 | 47.1 |
| | | | kW | | 10.0 | | | 11.2 | | | 12.5 | | | 14.0 | | | 15.6 | |
| | | 16.7 | THC | 50.3 | 50.3 | 58.8 | 48.4 | 48.4 | 56.6 | 46.4 | 46.4 | 54.2 | 44.2 | 44.2 | 51.7 | 41.8 | 41.8 | 48.9 |
| | | | SHC | 41.8 | 50.3 | 58.8 | 40.2 | 48.4 | 56.6 | 38.5 | 46.4 | 54.2 | 36.7 | 44.2 | 51.7 | 34.8 | 41.8 | 48.9 |
| | | | kW | | 10.0 | | | 11.2 | | | 12.5 | | | 14.0 | | | 15.6 | |
| | | 19.4 | THC | 52.0 | 52.0 | 56.7 | 49.8 | 49.8 | 55.7 | 47.4 | 47.4 | 54.5 | 44.8 | 44.8 | 53.3 | 42.1 | 42.1 | 51.7 |
| | | | SHC | 35.3 | 46.0 | 56.7 | 34.3 | 45.0 | 55.7 | 33.3 | 43.9 | 54.5 | 32.2 | 42.7 | 53.3 | 30.9 | 41.3 | 51.7 |
| | | | kW | | 10.1 | | | 11.3 | | | 12.6 | | | 14.0 | | | 15.6 | |
| | | 22.2 | THC | 56.1 | 56.1 | 56.1 | 53.7 | 53.7 | 53.7 | 51.2 | 51.2 | 51.2 | – | – | – | – | – | – |
| | | | SHC | 24.4 | 35.3 | 46.1 | 23.6 | 34.4 | 45.3 | 22.7 | 33.5 | 44.4 | – | – | – | – | – | – |
| | | | kW | | 10.3 | | | 11.5 | | | 12.8 | | | 14.2 | | | – | |
| | | 24.4 | THC | – | – | – | – | – | – | – | – | – | – | – | – | – | – | – |
| | | | SHC | – | – | – | – | – | – | – | – | – | – | – | – | – | – | – |
| | | | kW | | – | | | – | | | – | | | – | | | – | |

**LEGEND:**

– = Do not operate
L/s = Liters per second
EAT(wb) = Entering air temp (wet bulb)
kW = Compressor kilowatts
SHC = Sensible heat capacity (Gross)
THC = Total heat capacity (Gross)
EAT(db) = Entering air temp (dry bulb)
Cfm = Cubic feet per minute (supply air)

38AU

# PERFORMANCE DATA (cont.)

**38AUD16 - 40RUA16** **COMBINATION RATINGS** **ENGLISH**

| | | | | Ambient Temperature | | | | | | | | | | | | | | |
|---|---|---|---|---|---|---|---|---|---|---|---|---|---|---|---|---|---|---|
| | | | | 85.0 | | | 95.0 | | | 105.0 | | | 115.0 | | | 125.0 | | |
| | | | | EAT (db) | | | EAT (db) | | | EAT (db) | | | EAT (db) | | | EAT (db) | | |
| | | | | 75.0 | 80.0 | 85.0 | 75.0 | 80.0 | 85.0 | 75.0 | 80.0 | 85.0 | 75.0 | 80.0 | 85.0 | 75.0 | 80.0 | 85.0 |
| 4500 cfm | EAT (wb) | 58.0 | THC | 150.4 | 150.4 | 169.5 | 145.3 | 145.3 | 163.7 | 139.7 | 139.7 | 157.4 | 133.7 | 133.7 | 150.7 | 127.1 | 127.1 | 143.2 |
| | | | SHC | 131.3 | 150.4 | 169.5 | 126.8 | 145.3 | 163.7 | 122.0 | 139.7 | 157.4 | 116.7 | 133.7 | 150.7 | 111.0 | 127.1 | 143.2 |
| | | | kW | 9.7 | | | 10.9 | | | 12.3 | | | 13.8 | | | 15.4 | | |
| | | 62.0 | THC | 154.4 | 154.4 | 167.2 | 148.0 | 148.0 | 163.8 | 141.4 | 141.4 | 160.1 | 134.4 | 134.4 | 155.0 | 127.2 | 127.2 | 148.8 |
| | | | SHC | 121.2 | 144.2 | 167.2 | 118.0 | 140.9 | 163.8 | 114.7 | 137.4 | 160.1 | 110.5 | 132.8 | 155.0 | 105.7 | 127.2 | 148.8 |
| | | | kW | 9.7 | | | 10.9 | | | 12.3 | | | 13.8 | | | 15.4 | | |
| | | 67.0 | THC | 167.7 | 167.7 | 167.7 | 160.7 | 160.7 | 160.7 | 153.3 | 153.3 | 153.3 | 145.2 | 145.2 | 145.2 | 136.6 | 136.6 | 136.6 |
| | | | SHC | 98.3 | 121.6 | 144.9 | 95.4 | 118.7 | 142.0 | 92.4 | 115.7 | 138.9 | 89.1 | 112.4 | 135.6 | 85.6 | 108.9 | 132.1 |
| | | | kW | 9.9 | | | 11.1 | | | 12.4 | | | 13.9 | | | 15.5 | | |
| | | 72.0 | THC | 181.8 | 181.8 | 181.8 | 174.4 | 174.4 | 174.4 | 166.5 | 166.5 | 166.5 | 157.8 | 157.8 | 157.8 | 148.5 | 148.5 | 148.5 |
| | | | SHC | 74.4 | 97.8 | 121.2 | 71.7 | 95.1 | 118.5 | 68.7 | 92.1 | 115.5 | 65.5 | 88.9 | 112.3 | 62.1 | 85.5 | 108.8 |
| | | | kW | 10.1 | | | 11.3 | | | 12.6 | | | 14.1 | | | 15.6 | | |
| | | 76.0 | THC | – | 193.5 | 193.5 | – | 185.8 | 185.8 | – | 177.4 | 177.4 | – | – | – | – | – | – |
| | | | SHC | – | 78.4 | 102.4 | – | 75.8 | 99.7 | – | 72.9 | 96.7 | – | – | – | – | – | – |
| | | | kW | 10.3 | | | 11.5 | | | 12.8 | | | – | | | – | | |
| 5250 cfm | EAT (wb) | 58.0 | THC | 157.4 | 157.4 | 177.4 | 151.8 | 151.8 | 171.1 | 145.9 | 145.9 | 164.4 | 139.4 | 139.4 | 157.1 | 132.3 | 132.3 | 149.1 |
| | | | SHC | 137.4 | 157.4 | 177.4 | 132.6 | 151.8 | 171.1 | 127.4 | 145.9 | 164.4 | 121.7 | 139.4 | 157.1 | 115.5 | 132.3 | 149.1 |
| | | | kW | 9.8 | | | 11.0 | | | 12.4 | | | 13.8 | | | 15.4 | | |
| | | 62.0 | THC | 158.7 | 158.7 | 181.7 | 152.4 | 152.4 | 176.5 | 146.0 | 146.0 | 170.7 | 139.5 | 139.5 | 163.1 | 132.4 | 132.4 | 154.9 |
| | | | SHC | 129.7 | 155.7 | 181.7 | 125.7 | 151.1 | 176.5 | 121.3 | 146.0 | 170.7 | 115.9 | 139.5 | 163.1 | 110.0 | 132.4 | 154.9 |
| | | | kW | 9.8 | | | 11.0 | | | 12.4 | | | 13.8 | | | 15.4 | | |
| | | 67.0 | THC | 171.2 | 171.2 | 171.2 | 164.0 | 164.0 | 164.0 | 156.2 | 156.2 | 156.2 | 147.9 | 147.9 | 148.3 | 139.0 | 139.0 | 144.6 |
| | | | SHC | 104.3 | 131.1 | 157.9 | 101.3 | 128.1 | 154.9 | 98.2 | 125.0 | 151.8 | 94.9 | 121.6 | 148.3 | 91.3 | 118.0 | 144.6 |
| | | | kW | 10.0 | | | 11.2 | | | 12.5 | | | 13.9 | | | 15.5 | | |
| | | 72.0 | THC | 185.3 | 185.3 | 185.3 | 177.6 | 177.6 | 177.6 | 169.4 | 169.4 | 169.4 | 160.5 | 160.5 | 160.5 | 150.7 | 150.7 | 150.7 |
| | | | SHC | 76.8 | 103.7 | 130.7 | 74.0 | 100.9 | 127.9 | 71.0 | 98.0 | 124.9 | 67.9 | 94.7 | 121.6 | 64.4 | 91.3 | 118.1 |
| | | | kW | 10.2 | | | 11.4 | | | 12.7 | | | 14.1 | | | 15.7 | | |
| | | 76.0 | THC | – | 197.1 | 197.1 | – | 189.1 | 189.1 | – | – | – | – | – | – | – | – | – |
| | | | SHC | – | 81.5 | 109.0 | – | 78.8 | 106.2 | – | – | – | – | – | – | – | – | – |
| | | | kW | 10.4 | | | 11.6 | | | – | | | – | | | – | | |
| 6000 cfm | EAT (wb) | 58.0 | THC | 163.0 | 163.0 | 183.7 | 157.2 | 157.2 | 177.1 | 150.8 | 150.8 | 170.0 | 144.0 | 144.0 | 162.3 | 136.5 | 136.5 | 153.8 |
| | | | SHC | 142.4 | 163.0 | 183.7 | 137.2 | 157.2 | 177.1 | 131.7 | 150.8 | 170.0 | 125.7 | 144.0 | 162.3 | 119.2 | 136.5 | 153.8 |
| | | | kW | 9.9 | | | 11.1 | | | 12.4 | | | 13.9 | | | 15.5 | | |
| | | 62.0 | THC | 163.2 | 163.2 | 190.8 | 157.3 | 157.3 | 183.9 | 151.0 | 151.0 | 176.5 | 144.1 | 144.1 | 168.5 | 136.6 | 136.6 | 159.7 |
| | | | SHC | 135.6 | 163.2 | 190.8 | 130.6 | 157.3 | 183.9 | 125.4 | 151.0 | 176.5 | 119.7 | 144.1 | 168.5 | 113.5 | 136.6 | 159.7 |
| | | | kW | 9.9 | | | 11.1 | | | 12.4 | | | 13.9 | | | 15.5 | | |
| | | 67.0 | THC | 173.8 | 173.8 | 173.8 | 166.4 | 166.4 | 167.3 | 158.4 | 158.4 | 164.0 | 149.9 | 149.9 | 160.3 | 140.7 | 140.7 | 156.4 |
| | | | SHC | 109.9 | 140.1 | 170.3 | 106.9 | 137.1 | 167.3 | 103.7 | 133.8 | 164.0 | 100.3 | 130.3 | 160.3 | 96.6 | 126.5 | 156.4 |
| | | | kW | 10.0 | | | 11.2 | | | 12.5 | | | 14.0 | | | 15.5 | | |
| | | 72.0 | THC | 187.9 | 187.9 | 187.9 | 180.0 | 180.0 | 180.0 | 171.6 | 171.6 | 171.6 | 162.4 | 162.4 | 162.4 | 152.5 | 152.5 | 152.5 |
| | | | SHC | 79.0 | 109.4 | 139.8 | 76.2 | 106.6 | 137.0 | 73.2 | 103.6 | 133.9 | 70.0 | 100.3 | 130.7 | 66.6 | 96.9 | 127.2 |
| | | | kW | 10.2 | | | 11.4 | | | 12.7 | | | 14.2 | | | 15.7 | | |
| | | 76.0 | THC | – | – | – | – | – | – | – | – | – | – | – | – | – | – | – |
| | | | SHC | – | – | – | – | – | – | – | – | – | – | – | – | – | – | – |
| | | | kW | – | | | – | | | – | | | – | | | – | | |
| 6750 cfm | EAT (wb) | 58.0 | THC | 167.6 | 167.6 | 188.9 | 161.5 | 161.5 | 182.0 | 154.9 | 154.9 | 174.5 | 147.7 | 147.7 | 166.4 | 139.8 | 139.8 | 157.6 |
| | | | SHC | 146.3 | 167.6 | 188.9 | 141.0 | 161.5 | 182.0 | 135.2 | 154.9 | 174.5 | 128.9 | 147.7 | 166.4 | 122.1 | 139.8 | 157.6 |
| | | | kW | 9.9 | | | 11.1 | | | 12.5 | | | 13.9 | | | 15.5 | | |
| | | 62.0 | THC | 167.7 | 167.7 | 196.1 | 161.6 | 161.6 | 188.9 | 155.0 | 155.0 | 181.2 | 147.8 | 147.8 | 172.8 | 139.9 | 139.9 | 163.6 |
| | | | SHC | 139.3 | 167.7 | 196.1 | 134.2 | 161.6 | 188.9 | 128.7 | 155.0 | 181.2 | 122.7 | 147.8 | 172.8 | 116.2 | 139.9 | 163.6 |
| | | | kW | 9.9 | | | 11.1 | | | 12.5 | | | 13.9 | | | 15.5 | | |
| | | 67.0 | THC | 175.8 | 175.8 | 182.2 | 168.3 | 168.3 | 179.0 | 160.2 | 160.2 | 175.5 | 151.5 | 151.5 | 171.6 | 142.3 | 142.3 | 167.1 |
| | | | SHC | 115.2 | 148.7 | 182.2 | 112.2 | 145.6 | 179.0 | 108.9 | 142.2 | 175.5 | 105.4 | 138.5 | 171.6 | 101.5 | 134.3 | 167.1 |
| | | | kW | 10.0 | | | 11.2 | | | 12.6 | | | 14.0 | | | 15.6 | | |
| | | 72.0 | THC | 189.9 | 189.9 | 189.9 | 181.9 | 181.9 | 181.9 | 173.2 | 173.2 | 173.2 | 163.9 | 163.9 | 163.9 | 153.7 | 153.7 | 153.7 |
| | | | SHC | 81.2 | 114.9 | 148.7 | 78.4 | 112.1 | 145.8 | 75.3 | 109.1 | 142.8 | 72.1 | 105.8 | 139.5 | 68.6 | 102.3 | 135.9 |
| | | | kW | 10.3 | | | 11.4 | | | 12.8 | | | 14.2 | | | 15.7 | | |
| | | 76.0 | THC | – | – | – | – | – | – | – | – | – | – | – | – | – | – | – |
| | | | SHC | – | – | – | – | – | – | – | – | – | – | – | – | – | – | – |
| | | | kW | – | | | – | | | – | | | – | | | – | | |
| 7500 cfm | EAT (wb) | 58.0 | THC | 171.4 | 171.4 | 193.2 | 165.1 | 165.1 | 186.0 | 158.2 | 158.2 | 178.3 | 150.8 | 150.8 | 169.9 | 142.7 | 142.7 | 160.7 |
| | | | SHC | 149.7 | 171.4 | 193.2 | 144.1 | 165.1 | 186.0 | 138.1 | 158.2 | 178.3 | 131.6 | 150.8 | 169.9 | 124.6 | 142.7 | 160.7 |
| | | | kW | 10.0 | | | 11.2 | | | 12.5 | | | 14.0 | | | 15.6 | | |
| | | 62.0 | THC | 171.5 | 171.5 | 200.6 | 165.2 | 165.2 | 193.1 | 158.3 | 158.3 | 185.1 | 150.9 | 150.9 | 176.4 | 142.7 | 142.7 | 166.9 |
| | | | SHC | 142.5 | 171.5 | 200.6 | 137.2 | 165.2 | 193.1 | 131.5 | 158.3 | 185.1 | 125.3 | 150.9 | 176.4 | 118.6 | 142.7 | 166.9 |
| | | | kW | 10.0 | | | 11.2 | | | 12.5 | | | 14.0 | | | 15.6 | | |
| | | 67.0 | THC | 177.5 | 177.5 | 193.4 | 169.8 | 169.8 | 190.0 | 161.7 | 161.7 | 186.1 | 153.0 | 153.0 | 181.7 | 143.7 | 143.7 | 176.3 |
| | | | SHC | 120.3 | 156.8 | 193.4 | 117.1 | 153.5 | 190.0 | 113.7 | 149.9 | 186.1 | 110.0 | 145.8 | 181.7 | 105.6 | 140.9 | 176.3 |
| | | | kW | 10.1 | | | 11.3 | | | 12.6 | | | 14.0 | | | 15.6 | | |
| | | 72.0 | THC | 191.5 | 191.5 | 191.5 | 183.3 | 183.3 | 183.3 | 174.6 | 174.6 | 174.6 | 165.0 | 165.0 | 165.0 | – | – | – |
| | | | SHC | 83.2 | 120.3 | 157.3 | 80.4 | 117.4 | 154.5 | 77.4 | 114.4 | 151.4 | 74.1 | 111.1 | 148.1 | – | – | – |
| | | | kW | 10.3 | | | 11.5 | | | 12.8 | | | 14.2 | | | – | | |
| | | 76.0 | THC | – | – | – | – | – | – | – | – | – | – | – | – | – | – | – |
| | | | SHC | – | – | – | – | – | – | – | – | – | – | – | – | – | – | – |
| | | | kW | – | | | – | | | – | | | – | | | – | | |

**LEGEND:**

– = Do not operate
L/s = Liters per second
EAT(wb) = Entering air temp (wet bulb)
kW = Compressor kilowatts
SHC = Sensible heat capacity (Gross)
THC = Total heat capacity (Gross)
EAT(db) = Entering air temp (dry bulb)
Cfm = Cubic feet per minute (supply air)

38AU

# PERFORMANCE DATA (cont.)

**38AUD25 - 40RUA25** **COMBINATION RATINGS** **SI**

| | | | | Ambient Temperature | | | | | | | | | | | | | | |
|---|---|---|---|---|---|---|---|---|---|---|---|---|---|---|---|---|---|---|
| | | | | 29.4 | | | 35.0 | | | 40.6 | | | 46.1 | | | 51.7 | | |
| | | | | EAT (db) | | | EAT (db) | | | EAT (db) | | | EAT (db) | | | EAT (db) | | |
| | | | | 23.9 | 26.7 | 29.4 | 23.9 | 26.7 | 29.4 | 23.9 | 26.7 | 29.4 | 23.9 | 26.7 | 29.4 | 23.9 | 26.7 | 29.4 |
| 2832 L/S | EAT (wb) | 14.4 | THC | 58.3 | 58.3 | 65.7 | 56.2 | 56.2 | 63.3 | 54.0 | 54.0 | 60.8 | 51.5 | 51.5 | 58.0 | 48.7 | 48.7 | 54.9 |
| | | | SHC | 50.9 | 58.3 | 65.7 | 49.1 | 56.2 | 63.3 | 47.1 | 54.0 | 60.8 | 44.9 | 51.5 | 58.0 | 42.5 | 48.7 | 54.9 |
| | | | kW | 11.6 | | | 13.0 | | | 14.5 | | | 16.3 | | | 18.3 | | |
| | | 16.7 | THC | 59.8 | 59.8 | 64.9 | 57.3 | 57.3 | 63.6 | 54.5 | 54.5 | 62.0 | 51.7 | 51.7 | 59.8 | 48.7 | 48.7 | 57.0 |
| | | | SHC | 47.0 | 56.0 | 64.9 | 45.8 | 54.7 | 63.6 | 44.4 | 53.2 | 62.0 | 42.6 | 51.2 | 59.8 | 40.5 | 48.7 | 57.0 |
| | | | kW | 11.7 | | | 13.0 | | | 14.6 | | | 16.3 | | | 18.3 | | |
| | | 19.4 | THC | 65.4 | 65.4 | 65.4 | 62.5 | 62.5 | 62.5 | 59.4 | 59.4 | 59.4 | 56.0 | 56.0 | 56.0 | 52.3 | 52.3 | 52.3 |
| | | | SHC | 38.3 | 47.4 | 56.4 | 37.1 | 46.2 | 55.2 | 35.8 | 44.9 | 53.9 | 34.5 | 43.5 | 52.5 | 33.0 | 42.0 | 51.0 |
| | | | kW | | 11.9 | | | 13.3 | | | 14.6 | | | 16.6 | | | 18.5 | |
| | | 22.2 | THC | 71.6 | 71.6 | 71.6 | 68.4 | 68.4 | 68.4 | 65.0 | 65.0 | 65.0 | 61.3 | 61.3 | 61.3 | 57.2 | 57.2 | 57.2 |
| | | | SHC | 29.3 | 38.4 | 47.5 | 28.1 | 37.2 | 46.3 | 26.8 | 35.9 | 45.0 | 25.4 | 34.5 | 43.6 | 24.0 | 33.0 | 42.1 |
| | | | kW | | 12.3 | | | 13.6 | | | 15.1 | | | 16.9 | | 18.8 | | |
| | | 24.4 | THC | – | 76.8 | 76.8 | – | 73.4 | 73.4 | – | 69.7 | 69.7 | – | – | – | – | – | – |
| | | | SHC | – | 31.1 | 40.6 | – | 29.9 | 39.3 | – | 28.6 | 38.0 | – | – | – | – | – | – |
| | | | kW | | 12.6 | | | 13.9 | | | 15.4 | | | – | | | – | |
| 3304 L/S | EAT (wb) | 14.4 | THC | 61.1 | 61.1 | 68.8 | 58.9 | 58.9 | 66.4 | 56.4 | 56.4 | 63.6 | 53.7 | 53.7 | 60.6 | 50.7 | 50.7 | 57.2 |
| | | | SHC | 53.3 | 61.1 | 68.8 | 51.4 | 58.9 | 66.4 | 49.3 | 56.4 | 63.6 | 46.9 | 53.7 | 60.6 | 44.3 | 50.7 | 57.2 |
| | | | kW | | 11.7 | | | 13.1 | | | 14.7 | | | 16.5 | | 18.4 | | |
| | | 16.7 | THC | 61.7 | 61.7 | 70.5 | 59.1 | 59.1 | 68.5 | 56.5 | 56.5 | 66.0 | 53.8 | 53.8 | 62.9 | 50.8 | 50.8 | 59.4 |
| | | | SHC | 50.4 | 60.4 | 70.5 | 48.8 | 58.6 | 68.5 | 46.9 | 56.5 | 66.0 | 44.7 | 53.8 | 62.9 | 42.2 | 50.8 | 59.4 |
| | | | kW | | 11.8 | | | 13.1 | | | 14.7 | | | 16.5 | | | 18.4 | |
| | | 19.4 | THC | 67.0 | 67.0 | 67.0 | 64.0 | 64.0 | 64.0 | 60.7 | 60.7 | 60.7 | 57.2 | 57.2 | 57.5 | 53.3 | 53.3 | 55.9 |
| | | | SHC | 40.7 | 51.1 | 61.5 | 39.5 | 49.9 | 60.3 | 38.2 | 48.5 | 58.9 | 36.7 | 47.1 | 57.5 | 35.2 | 45.5 | 55.9 |
| | | | kW | | 12.0 | | | 13.4 | | | 14.9 | | | 16.6 | | | 18.6 | |
| | | 22.2 | THC | 73.2 | 73.2 | 73.2 | 69.9 | 69.9 | 69.9 | 66.3 | 66.3 | 66.3 | 62.4 | 62.4 | 62.4 | 58.2 | 58.2 | 58.2 |
| | | | SHC | 30.3 | 40.8 | 51.3 | 29.1 | 39.5 | 50.0 | 27.8 | 38.2 | 48.7 | 26.4 | 36.8 | 47.2 | 24.9 | 35.3 | 45.7 |
| | | | kW | | 12.4 | | | 13.7 | | | 15.2 | | | 16.9 | | | 18.8 | |
| | | 24.4 | THC | – | 78.5 | 78.5 | – | – | – | – | – | – | – | – | – | – | – | – |
| | | | SHC | – | 32.4 | 43.2 | – | – | – | – | – | – | – | – | – | – | – | – |
| | | | kW | | 12.7 | | | – | | | – | | | – | | | – | |
| 3776 L/S | EAT (wb) | 14.4 | THC | 63.4 | 63.4 | 71.5 | 61.0 | 61.0 | 68.8 | 58.4 | 58.4 | 65.8 | 55.5 | 55.5 | 62.6 | 52.4 | 52.4 | 59.0 |
| | | | SHC | 55.4 | 63.4 | 71.5 | 53.3 | 61.0 | 68.8 | 51.0 | 58.4 | 65.8 | 48.5 | 55.5 | 62.6 | 45.7 | 52.4 | 59.0 |
| | | | kW | | 11.9 | | | 13.2 | | | 14.8 | | | 16.6 | | | 18.5 | |
| | | 16.7 | THC | 63.5 | 63.5 | 74.2 | 61.1 | 61.1 | 71.4 | 58.5 | 58.5 | 68.4 | 55.6 | 55.6 | 65.0 | 52.4 | 52.4 | 61.3 |
| | | | SHC | 52.7 | 63.5 | 74.2 | 50.7 | 61.1 | 71.4 | 48.6 | 58.5 | 68.4 | 46.2 | 55.6 | 65.0 | 43.6 | 52.4 | 61.3 |
| | | | kW | | 11.9 | | | 13.2 | | | 14.8 | | | 16.6 | | | 18.5 | |
| | | 19.4 | THC | 68.1 | 68.1 | 68.1 | 65.0 | 65.0 | 65.1 | 61.6 | 61.6 | 63.7 | 58.0 | 58.0 | 62.1 | 54.0 | 54.0 | 60.4 |
| | | | SHC | 42.9 | 54.7 | 66.4 | 41.7 | 53.4 | 65.1 | 40.3 | 52.0 | 63.7 | 38.8 | 50.5 | 62.1 | 37.3 | 48.8 | 60.4 |
| | | | kW | | 12.1 | | | 13.4 | | | 15.0 | | | 16.7 | | | 18.6 | |
| | | 22.2 | THC | 74.5 | 74.5 | 74.5 | 71.0 | 71.0 | 71.0 | 67.3 | 67.3 | 67.3 | 63.3 | 63.3 | 63.3 | 59.0 | 59.0 | 59.0 |
| | | | SHC | 31.2 | 43.1 | 54.8 | 30.0 | 41.8 | 53.6 | 28.7 | 40.4 | 52.2 | 27.3 | 39.0 | 50.7 | 25.8 | 37.5 | 49.2 |
| | | | kW | | 12.4 | | | 13.8 | | | 15.3 | | | 17.0 | | | 18.9 | |
| | | 24.4 | THC | – | – | – | – | – | – | – | – | – | – | – | – | – | – | – |
| | | | SHC | – | – | – | – | – | – | – | – | – | – | – | – | – | – | – |
| | | | kW | | – | | | – | | | – | | | – | | | – | |
| 4248 L/S | EAT (wb) | 14.4 | THC | 65.4 | 65.4 | 73.7 | 62.8 | 62.8 | 70.8 | 60.1 | 60.1 | 67.7 | 57.1 | 57.1 | 64.3 | 53.8 | 53.8 | 60.6 |
| | | | SHC | 57.1 | 65.4 | 73.7 | 54.9 | 62.8 | 70.8 | 52.5 | 60.1 | 67.7 | 49.8 | 57.1 | 64.3 | 46.9 | 53.8 | 60.6 |
| | | | kW | | 12.0 | | | 13.3 | | | 14.9 | | | 16.6 | | | 18.6 | |
| | | 16.7 | THC | 65.4 | 65.4 | 76.5 | 62.9 | 62.9 | 73.5 | 60.1 | 60.1 | 70.3 | 57.1 | 57.1 | 66.8 | 53.8 | 53.8 | 62.9 |
| | | | SHC | 54.3 | 65.4 | 76.5 | 52.2 | 62.9 | 73.5 | 49.9 | 60.1 | 70.3 | 47.5 | 57.1 | 66.8 | 44.7 | 53.8 | 62.9 |
| | | | kW | | 12.0 | | | 13.3 | | | 14.9 | | | 16.6 | | | 18.6 | |
| | | 19.4 | THC | 69.1 | 69.1 | 71.0 | 65.9 | 65.9 | 69.7 | 62.4 | 62.4 | 68.1 | 58.7 | 58.7 | 66.4 | 54.7 | 54.7 | 64.5 |
| | | | SHC | 45.1 | 58.1 | 71.0 | 43.8 | 56.7 | 69.7 | 42.4 | 55.2 | 68.1 | 40.8 | 53.6 | 66.4 | 39.1 | 51.8 | 64.5 |
| | | | kW | | 12.2 | | | 13.5 | | | 15.0 | | | 16.7 | | | 18.7 | |
| | | 22.2 | THC | 75.5 | 75.5 | 75.5 | 72.0 | 72.0 | 72.0 | 68.1 | 68.1 | 68.1 | 64.0 | 64.0 | 64.0 | – | – | – |
| | | | SHC | 32.1 | 45.2 | 58.3 | 30.9 | 43.9 | 57.0 | 29.5 | 42.6 | 55.6 | 28.1 | 41.1 | 54.1 | – | – | – |
| | | | kW | | 12.5 | | | 13.8 | | | 15.3 | | | 17.0 | | | – | |
| | | 24.4 | THC | – | – | – | – | – | – | – | – | – | – | – | – | – | – | – |
| | | | SHC | – | – | – | – | – | – | – | – | – | – | – | – | – | – | – |
| | | | kW | | – | | | – | | | – | | | – | | | – | |
| 4719 L/S | EAT (wb) | 14.4 | THC | 67.0 | 67.0 | 75.5 | 64.4 | 64.4 | 72.6 | 61.5 | 61.5 | 69.3 | 58.4 | 58.4 | 65.8 | 54.9 | 54.9 | 61.8 |
| | | | SHC | 58.5 | 67.0 | 75.5 | 56.2 | 64.4 | 72.6 | 53.7 | 61.5 | 69.3 | 51.0 | 58.4 | 65.8 | 47.9 | 54.9 | 61.8 |
| | | | kW | | 12.1 | | | 13.4 | | | 15.0 | | | 16.7 | | | 18.7 | |
| | | 16.7 | THC | 67.1 | 67.1 | 78.4 | 64.4 | 64.4 | 75.4 | 61.5 | 61.5 | 72.0 | 58.4 | 58.4 | 68.3 | 54.9 | 54.9 | 64.2 |
| | | | SHC | 55.7 | 67.1 | 78.4 | 53.5 | 64.4 | 75.4 | 51.1 | 61.5 | 72.0 | 48.5 | 58.4 | 68.3 | 45.6 | 54.9 | 64.2 |
| | | | kW | | 12.1 | | | 13.4 | | | 15.0 | | | 16.7 | | | 18.7 | |
| | | 19.4 | THC | 69.9 | 69.9 | 75.4 | 66.6 | 66.6 | 74.0 | 63.1 | 63.1 | 72.3 | 59.3 | 59.3 | 70.4 | 55.3 | 55.3 | 67.9 |
| | | | SHC | 47.1 | 61.3 | 75.4 | 45.7 | 59.8 | 74.0 | 44.3 | 58.3 | 72.3 | 42.6 | 56.5 | 70.4 | 40.7 | 54.3 | 67.9 |
| | | | kW | | 12.2 | | | 13.5 | | | 15.1 | | | 16.8 | | | 18.7 | |
| | | 22.2 | THC | 76.3 | 76.3 | 76.3 | 72.7 | 72.7 | 72.7 | 68.7 | 68.7 | 68.7 | – | – | – | – | – | – |
| | | | SHC | 33.0 | 47.3 | 61.7 | 31.7 | 46.0 | 60.3 | 30.3 | 44.6 | 58.9 | – | – | – | – | – | – |
| | | | kW | | 12.6 | | | 13.9 | | | 15.4 | | | – | | | – | |
| | | 24.4 | THC | – | – | – | – | – | – | – | – | – | – | – | – | – | – | – |
| | | | SHC | – | – | – | – | – | – | – | – | – | – | – | – | – | – | – |
| | | | kW | | – | | | – | | | – | | | – | | | – | |

**LEGEND:**

– = Do not operate
L/s = Liters per second
EAT(wb) = Entering air temp (wet bulb)
kW = Compressor kilowatts
SHC = Sensible heat capacity (Gross)
THC = Total heat capacity (Gross)
EAT(db) = Entering air temp (dry bulb)
Cfm = Cubic feet per minute (supply air)

38AU

# PERFORMANCE DATA (cont.)

**38AUD25 - 40RUA25** **COMBINATION RATINGS** **ENGLISH**

| | | | | Ambient Temperature | | | | | | | | | | | | | | |
|---|---|---|---|---|---|---|---|---|---|---|---|---|---|---|---|---|---|---|
| | | | | 85.0 | | | 95.0 | | | 105.0 | | | 115.0 | | | 125.0 | | |
| | | | | EAT (db) | | | EAT (db) | | | EAT (db) | | | EAT (db) | | | EAT (db) | | |
| | | | | 75.0 | 80.0 | 85.0 | 75.0 | 80.0 | 85.0 | 75.0 | 80.0 | 85.0 | 75.0 | 80.0 | 85.0 | 75.0 | 80.0 | 85.0 |
| 6000 cfm | EAT (wb) | 58.0 | THC | 198.8 | 198.8 | 224.1 | 191.8 | 191.8 | 216.1 | 184.1 | 184.1 | 207.4 | 175.6 | 175.6 | 197.9 | 166.1 | 166.1 | 187.2 |
| | | | SHC | 173.6 | 198.8 | 224.1 | 167.5 | 191.8 | 216.1 | 160.7 | 184.1 | 207.4 | 153.3 | 175.6 | 197.9 | 145.1 | 166.1 | 187.2 |
| | | | kW | 11.6 | | | 13.0 | | | 14.5 | | | 16.3 | | | 18.3 | | |
| | | 62.0 | THC | 204.2 | 204.2 | 221.5 | 195.5 | 195.5 | 216.9 | 186.1 | 186.1 | 211.6 | 176.5 | 176.5 | 204.0 | 166.3 | 166.3 | 194.5 |
| | | | SHC | 160.5 | 191.0 | 221.5 | 156.2 | 186.5 | 216.9 | 151.4 | 181.5 | 211.6 | 145.3 | 174.7 | 204.0 | 138.1 | 166.3 | 194.5 |
| | | | kW | 11.7 | | | 13.0 | | | 14.6 | | | 16.3 | | | 18.3 | | |
| | | 67.0 | THC | 223.1 | 223.1 | 223.1 | 213.4 | 213.4 | 213.4 | 202.7 | 202.7 | 202.7 | 191.2 | 191.2 | 191.2 | 178.5 | 178.5 | 178.5 |
| | | | SHC | 130.8 | 161.7 | 192.6 | 126.7 | 157.6 | 188.4 | 122.3 | 153.2 | 184.0 | 117.6 | 148.4 | 179.2 | 112.5 | 143.3 | 174.1 |
| | | | kW | 11.9 | | | 13.3 | | | 14.6 | | | 16.6 | | | 18.5 | | |
| | | 72.0 | THC | 244.3 | 244.3 | 244.3 | 233.5 | 233.5 | 233.5 | 221.8 | 221.8 | 221.8 | 209.1 | 209.1 | 209.1 | 195.3 | 195.3 | 195.3 |
| | | | SHC | 99.9 | 131.0 | 162.2 | 95.9 | 126.9 | 158.0 | 91.5 | 122.5 | 153.6 | 86.8 | 117.8 | 148.8 | 81.8 | 112.7 | 143.7 |
| | | | kW | 12.3 | | | 13.6 | | | 15.1 | | | 16.9 | | | 18.8 | | |
| | | 76.0 | THC | – | 262.2 | 262.2 | – | 250.5 | 250.5 | – | 237.8 | 237.8 | – | – | – | – | – | – |
| | | | SHC | – | 106.2 | 138.4 | – | 102.1 | 134.2 | – | 97.7 | 129.6 | – | – | – | – | – | – |
| | | | kW | 12.6 | | | 13.9 | | | 15.4 | | | – | | | – | | |
| 7000 cfm | EAT (wb) | 58.0 | THC | 208.5 | 208.5 | 234.9 | 200.9 | 200.9 | 226.4 | 192.5 | 192.5 | 216.9 | 183.3 | 183.3 | 206.6 | 173.1 | 173.1 | 195.1 |
| | | | SHC | 182.0 | 208.5 | 234.9 | 175.4 | 200.9 | 226.4 | 168.1 | 192.5 | 216.9 | 160.1 | 183.3 | 206.6 | 151.1 | 173.1 | 195.1 |
| | | | kW | 11.7 | | | 13.1 | | | 14.7 | | | 16.5 | | | 18.4 | | |
| | | 62.0 | THC | 210.4 | 210.4 | 240.6 | 201.7 | 201.7 | 233.7 | 192.7 | 192.7 | 225.3 | 183.5 | 183.5 | 214.6 | 173.3 | 173.3 | 202.6 |
| | | | SHC | 171.9 | 206.2 | 240.6 | 166.4 | 200.1 | 233.7 | 160.0 | 192.7 | 225.3 | 152.4 | 183.5 | 214.6 | 143.9 | 173.3 | 202.6 |
| | | | kW | 11.8 | | | 13.1 | | | 14.7 | | | 16.5 | | | 18.4 | | |
| | | 67.0 | THC | 228.5 | 228.5 | 228.5 | 218.2 | 218.2 | 218.2 | 207.0 | 207.0 | 207.0 | 195.0 | 195.0 | 196.1 | 181.9 | 181.9 | 190.6 |
| | | | SHC | 138.9 | 174.4 | 210.0 | 134.7 | 170.2 | 205.7 | 130.2 | 165.6 | 201.1 | 125.3 | 160.7 | 196.1 | 120.0 | 155.3 | 190.6 |
| | | | kW | 12.0 | | | 13.4 | | | 14.9 | | | 16.6 | | | 18.6 | | |
| | | 72.0 | THC | 249.9 | 249.9 | 249.9 | 238.6 | 238.6 | 238.6 | 226.3 | 226.3 | 226.3 | 213.0 | 213.0 | 213.0 | 198.6 | 198.6 | 198.6 |
| | | | SHC | 103.4 | 139.1 | 174.9 | 99.2 | 134.9 | 170.6 | 94.8 | 130.4 | 166.1 | 90.0 | 125.6 | 161.2 | 84.9 | 120.4 | 155.9 |
| | | | kW | 12.4 | | | 13.7 | | | 15.2 | | | 16.9 | | | 18.8 | | |
| | | 76.0 | THC | – | 268.0 | 268.0 | – | – | – | – | – | – | – | – | – | – | – | – |
| | | | SHC | – | 110.5 | 147.3 | – | – | – | – | – | – | – | – | – | – | – | – |
| | | | kW | 12.7 | | | – | | | – | | | – | | | – | | |
| 8000 cfm | EAT (wb) | 58.0 | THC | 216.4 | 216.4 | 243.8 | 208.2 | 208.2 | 234.7 | 199.3 | 199.3 | 224.6 | 189.5 | 189.5 | 213.6 | 178.7 | 178.7 | 201.4 |
| | | | SHC | 188.9 | 216.4 | 243.8 | 181.8 | 208.2 | 234.7 | 174.0 | 199.3 | 224.6 | 165.5 | 189.5 | 213.6 | 156.0 | 178.7 | 201.4 |
| | | | kW | 11.9 | | | 13.2 | | | 14.8 | | | 16.6 | | | 18.5 | | |
| | | 62.0 | THC | 216.6 | 216.6 | 253.3 | 208.4 | 208.4 | 243.7 | 199.5 | 199.5 | 233.3 | 189.7 | 189.7 | 221.8 | 178.8 | 178.8 | 209.1 |
| | | | SHC | 179.9 | 216.6 | 253.3 | 173.1 | 208.4 | 243.7 | 165.7 | 199.5 | 233.3 | 157.6 | 189.7 | 221.8 | 148.6 | 178.8 | 209.1 |
| | | | kW | 11.9 | | | 13.2 | | | 14.8 | | | 16.6 | | | 18.5 | | |
| | | 67.0 | THC | 232.5 | 232.5 | 232.5 | 221.8 | 221.8 | 222.2 | 210.3 | 210.3 | 217.3 | 197.9 | 197.9 | 212.0 | 184.4 | 184.4 | 206.0 |
| | | | SHC | 146.5 | 186.6 | 226.6 | 142.2 | 182.2 | 222.2 | 137.6 | 177.4 | 217.3 | 132.5 | 172.2 | 212.0 | 127.1 | 166.5 | 206.0 |
| | | | kW | 12.1 | | | 13.4 | | | 15.0 | | | 16.7 | | | 18.6 | | |
| | | 72.0 | THC | 254.2 | 254.2 | 254.2 | 242.4 | 242.4 | 242.4 | 229.7 | 229.7 | 229.7 | 216.0 | 216.0 | 216.0 | 201.2 | 201.2 | 201.2 |
| | | | SHC | 106.6 | 146.9 | 187.1 | 102.4 | 142.6 | 182.8 | 97.9 | 138.0 | 178.1 | 93.0 | 133.1 | 173.1 | 87.9 | 127.8 | 167.7 |
| | | | kW | 12.4 | | | 13.8 | | | 15.3 | | | 17.0 | | | 18.9 | | |
| | | 76.0 | THC | – | – | – | – | – | – | – | – | – | – | – | – | – | – | – |
| | | | SHC | – | – | – | – | – | – | – | – | – | – | – | – | – | – | – |
| | | | kW | – | | | – | | | – | | | – | | | – | | |
| 9000 cfm | EAT (wb) | 58.0 | THC | 223.0 | 223.0 | 251.3 | 214.4 | 214.4 | 241.6 | 205.0 | 205.0 | 231.0 | 194.7 | 194.7 | 219.4 | 183.4 | 183.4 | 206.6 |
| | | | SHC | 194.7 | 223.0 | 251.3 | 187.2 | 214.4 | 241.6 | 179.0 | 205.0 | 231.0 | 170.0 | 194.7 | 219.4 | 160.1 | 183.4 | 206.6 |
| | | | kW | 12.0 | | | 13.3 | | | 14.9 | | | 16.6 | | | 18.6 | | |
| | | 62.0 | THC | 223.2 | 223.2 | 261.0 | 214.6 | 214.6 | 250.9 | 205.2 | 205.2 | 239.9 | 194.9 | 194.9 | 227.9 | 183.5 | 183.5 | 214.5 |
| | | | SHC | 185.4 | 223.2 | 261.0 | 178.2 | 214.6 | 250.9 | 170.4 | 205.2 | 239.9 | 161.9 | 194.9 | 227.9 | 152.4 | 183.5 | 214.5 |
| | | | kW | 12.0 | | | 13.3 | | | 14.9 | | | 16.6 | | | 18.6 | | |
| | | 67.0 | THC | 235.8 | 235.8 | 242.4 | 224.8 | 224.8 | 237.7 | 213.0 | 213.0 | 232.5 | 200.3 | 200.3 | 226.7 | 186.6 | 186.6 | 220.0 |
| | | | SHC | 153.8 | 198.1 | 242.4 | 149.3 | 193.5 | 237.7 | 144.5 | 188.5 | 232.5 | 139.3 | 183.0 | 226.7 | 133.4 | 176.7 | 220.0 |
| | | | kW | 12.2 | | | 13.5 | | | 15.0 | | | 16.7 | | | 18.7 | | |
| | | 72.0 | THC | 257.6 | 257.6 | 257.6 | 245.5 | 245.5 | 245.5 | 232.4 | 232.4 | 232.4 | 218.4 | 218.4 | 218.4 | – | – | – |
| | | | SHC | 109.6 | 154.3 | 198.9 | 105.4 | 149.9 | 194.5 | 100.8 | 145.2 | 189.7 | 95.9 | 140.2 | 184.6 | – | – | – |
| | | | kW | 12.5 | | | 13.8 | | | 15.3 | | | 17.0 | | | – | | |
| | | 76.0 | THC | – | – | – | – | – | – | – | – | – | – | – | – | – | – | – |
| | | | SHC | – | – | – | – | – | – | – | – | – | – | – | – | – | – | – |
| | | | kW | – | | | – | | | – | | | – | | | – | | |
| 10,000 cfm | EAT (wb) | 58.0 | THC | 228.7 | 228.7 | 257.7 | 219.7 | 219.7 | 247.6 | 209.8 | 209.8 | 236.5 | 199.1 | 199.1 | 224.4 | 187.3 | 187.3 | 211.0 |
| | | | SHC | 199.7 | 228.7 | 257.7 | 191.8 | 219.7 | 247.6 | 183.2 | 209.8 | 236.5 | 173.9 | 199.1 | 224.4 | 163.5 | 187.3 | 211.0 |
| | | | kW | 12.1 | | | 13.4 | | | 15.0 | | | 16.7 | | | 18.7 | | |
| | | 62.0 | THC | 228.8 | 228.8 | 267.6 | 219.8 | 219.8 | 257.1 | 210.0 | 210.0 | 245.5 | 199.2 | 199.2 | 233.0 | 187.4 | 187.4 | 219.1 |
| | | | SHC | 190.1 | 228.8 | 267.6 | 182.6 | 219.8 | 257.1 | 174.4 | 210.0 | 245.5 | 165.5 | 199.2 | 233.0 | 155.7 | 187.4 | 219.1 |
| | | | kW | 12.1 | | | 13.4 | | | 15.0 | | | 16.7 | | | 18.7 | | |
| | | 67.0 | THC | 238.5 | 238.5 | 257.4 | 227.3 | 227.3 | 252.4 | 215.2 | 215.2 | 246.7 | 202.4 | 202.4 | 240.1 | 188.7 | 188.7 | 231.8 |
| | | | SHC | 160.6 | 209.0 | 257.4 | 156.0 | 204.2 | 252.4 | 151.0 | 198.8 | 246.7 | 145.4 | 192.7 | 240.1 | 138.9 | 185.3 | 231.8 |
| | | | kW | 12.2 | | | 13.5 | | | 15.1 | | | 16.8 | | | 18.7 | | |
| | | 72.0 | THC | 260.3 | 260.3 | 260.3 | 247.9 | 247.9 | 247.9 | 234.5 | 234.5 | 234.5 | – | – | – | – | – | – |
| | | | SHC | 112.5 | 161.4 | 210.4 | 108.2 | 157.0 | 205.9 | 103.5 | 152.3 | 201.0 | – | – | – | – | – | – |
| | | | kW | 12.6 | | | 13.9 | | | 15.4 | | | – | | | – | | |
| | | 76.0 | THC | – | – | – | – | – | – | – | – | – | – | – | – | – | – | – |
| | | | SHC | – | – | – | – | – | – | – | – | – | – | – | – | – | – | – |
| | | | kW | – | | | – | | | – | | | – | | | – | | |

**LEGEND:**

– = Do not operate
L/s = Liters per second
EAT(wb) = Entering air temp (wet bulb)
kW = Compressor kilowatts
SHC = Sensible heat capacity (Gross)
THC = Total heat capacity (Gross)
EAT(db) = Entering air temp (dry bulb)
Cfm = Cubic feet per minute (supply air)

38AU

# ELECTRICAL DATA

## 38AUZ07 COOLING 50 Hz

| 38AUZ07 | | | | | | | WITHOUT PWRD C.O. | | WITH PWRD C.O. | |
|---|---|---|---|---|---|---|---|---|---|---|
| V–Ph–Hz | VOLTAGE RANGE | | COMP 1 | | OFM (ea) | | MCA | Fuse | MCA | Fuse |
| | MIN | MAX | RLA | LRA | WATTS | FLA | | | | |
| 400–3–50 | 380 | 420 | 9.7 | 64 | 270 | 0.7 | 13.5 | 20 | 15.9 | 25 |

## 38AUZ08 COOLING 50 Hz

| 38AUZ08 | | | | | | | WITHOUT PWRD C.O. | | WITH PWRD C.O. | |
|---|---|---|---|---|---|---|---|---|---|---|
| V–Ph–Hz | VOLTAGE RANGE | | COMP 1 | | OFM (ea) | | | | | |
| | MIN | MAX | RLA | LRA | WATTS | FLA | MCA | Fuse | MCA | Fuse |
| 400–3–50 | 380 | 420 | 12.2 | 101 | 270 | 0.7 | 16.7 | 25 | 19.0 | 30 |

38AU

## 38AUD12 COOLING 50 Hz

| 38AUD12 | | | | | | | | | WITHOUT PWRD C.O. | | WITH PWRD C.O. | |
|---|---|---|---|---|---|---|---|---|---|---|---|---|
| V–Ph–Hz | VOLTAGE RANGE | | COMP 1 | | COMP 2 | | OFM (ea) | | | | | |
| | MIN | MAX | RLA | LRA | RLA | LRA | WATTS | FLA | MCA | Fuse | MCA | Fuse |
| 400–3–50 | 380 | 420 | 7.8 | 51.5 | 7.8 | 51.5 | 270 | 0.7 | 19.0 | 25 | 21.3 | 30 |

## 38AUD14 COOLING 50 Hz

| 38AUD14 | | | | | | | | | WITHOUT PWRD C.O. | | WITH PWRD C.O. | |
|---|---|---|---|---|---|---|---|---|---|---|---|---|
| V–Ph–Hz | VOLTAGE RANGE | | COMP 1 | | COMP 2 | | OFM (ea) | | | | | |
| | MIN | MAX | RLA | LRA | RLA | LRA | WATTS | FLA | MCA | Fuse | MCA | Fuse |
| 400–3–50 | 380 | 420 | 10.6 | 74 | 10.6 | 74 | 270 | 0.7 | 25.3 | 30 | 27.6 | 30 |

## 38AUD16 COOLING 50 Hz

| 38AUD16 | | | | | | | | | POWER SUPPLY | | DISCONNECT SIZE | |
|---|---|---|---|---|---|---|---|---|---|---|---|---|
| V–Ph–Hz | VOLTAGE RANGE | | COMP 1 | | COMP 2 | | OFM | | | | | |
| | Min | Max | RLA | LRA | RLA | LRA | Qty | FLA (ea) | MCA | MOCP | FLA | LRA |
| 400–3–50 | 360 | 440 | 12.2 | 101 | 12.2 | 101 | 3 | 0.7 | 29.6 | 40 | 30 | 208 |

## 38AUD25 COOLING 50 Hz

| 38AUD24 | | | | | | | | | POWER SUPPLY | | DISCONNECT SIZE | |
|---|---|---|---|---|---|---|---|---|---|---|---|---|
| V–Ph–Hz | VOLTAGE RANGE | | COMP 1 | | COMP 2 | | OFM | | | | | |
| | Min | Max | RLA | LRA | RLA | LRA | Qty | FLA (ea) | MCA | MOCP | FLA | LRA |
| 400–3–50 | 360 | 440 | 16.7 | 111 | 16.7 | 111 | 4 | 0.7 | 40.4 | 50 | 42 | 230 |

# APPLICATION DATA

## Operating limits

Maximum outdoor temperature . . . . . 125°F

Minimum return-air temperature (40RUA) . . . . . 55°F

Maximum return-air temperature (40RUA) . . . . . 95°F

Range of acceptable saturation
suction temperature . . . . . 20 to 50°F

Maximum discharge temperature . . . . . 275°F

Minimum discharge superheat . . . . . 60°F

**NOTES**:

1. Select air handler at no less than 300 cfm/ton (nominal condensing unit capacity).
2. Total combined draw of the field-supplied liquid line solenoid valve and air handler fan contactor must not exceed 22 va. If the specified va must be exceeded, use a remote relay to control the load.

**MINIMUM OUTDOOR-AIR OPERATING TEMPERATURE**

| UNIT 38AU | MINIMUM OUTDOOR TEMP (°F) | |
|---|---|---|
| | Std | With MotorMaster I® Control† |
| Z07 | 35 | –20 |
| Z08 | 35 | |
| D12 | 35 | |
| D14 | 35 | |
| D16 | 35 | |
| D25 | 35 | |

† Wind baffles (field-supplied and field-installed) are recommended for all units with MotorMaster I® control. Refer to Low Ambient Temperature Control Installation Instructions for additional information.

## Refrigerant piping

**IMPORTANT**: Do not bury refrigerant piping underground.

It is recommended that the refrigerant piping for all commercial split systems include a liquid line solenoid valve, a liquid line filter drier and a sight glass.

For refrigerant lines longer than 75 lineal ft, a liquid line solenoid valve installed at the **indoor** unit and a suction accumulator are required. Refer to the Refrigerant Specialties Part Numbers table.

**REFRIGERANT SPECIALTIES PART NUMBERS**

| LIQUID LINE SIZE (in.) | LIQUID LINE SOLENOID VALVE (LLSV) | LLSV COIL | SIGHT GLASS |
|---|---|---|---|
| 3/8 | EF680033 | EF680037 | KM680008 |
| 1/2 | EF680035 | EF680037 | KM680004 |
| 5/8 | EF680036 | EF680037 | KM680005 |

**NOTE**: 38AUD units require TWO sets of parts.

## 38AUZ 07-08 PIPING RECOMMENDATIONS (SINGLE-CIRCUIT UNIT)

| R–410A | Equivalent Length | | | | | | | | | |
|---|---|---|---|---|---|---|---|---|---|---|
| | meter | 0–12 | | 12–23 | | 23–34 | | 34–46 | | 46–57 | |
| | feet | 0–38 | | 38–75 | | 75–113 | | 113–150 | | 150–188 | |
| Model | Linear Length | | | | | | | | | | |
| | meter | 0–7.5 | | 7.5–15 | | 15–23 | | 23–30 | | 30–38 | |
| | feet | 0–25 | | 25–50 | | 50–75 | | 75–100 | | 100–125 | |
| 38AUZ*07 | Liquid Line | 3/8 | | 3/8 | 1/2 | 3/8 | 1/2 | 3/8 | 1/2 | 3/8 | 1/2 |
| | Max Lift | | | | | | | | | | |
| | SI (m) | | | | | | | | | | |
| | Novation | 7.5 | | 15 | | 16 | 23 | 9 | 29 | 10 | 34 |
| | RTPF | 7.5 | | 15 | | 19 | 23 | 12 | 30 | 11 | 38 |
| | EN (ft) | | | | | | | | | | |
| | Novation | 25 | | 50 | | 53 | 75 | 34 | 97 | 33 | 112 |
| | RTPF | 25 | | 50 | | 63 | 75 | 42 | 100 | 38 | 125 |
| | Suction Line | 7/8 | 7/8 | 7/8 | | 7/8 | | 7/8 | | 1–1/8 | |
| | Charge | | | | | | | | | | |
| | SI (kg) | | | | | | | | | | |
| | Novation | 3.8 | | 4.4 | | 4.9 | 5.9 | 5.4 | 6.8 | 6.1 | 7.9 |
| | RTPF | 6.4 | | 7.0 | | 7.4 | 8.5 | 7.9 | 9.3 | 8.7 | 10.4 |
| | EN (lbs) | | | | | | | | | | |
| | Novation | 8.4 | | 9.8 | | 10.8 | 13.1 | 11.8 | 14.9 | 13.5 | 17.4 |
| | RTPF | 14.0 | | 15.4 | | 16.4 | 18.7 | 17.4 | 20.5 | 19.1 | 23.0 |
| 38AUZ*08 | Liquid Line | 1/2 | | 1/2 | 5/8 | 1/2 | 5/8 | 1/2 | 5/8 | 1/2 | 5/8 |
| | Max Lift | | | | | | | | | | |
| | SI (m) | | | | | | | | | | |
| | Novation | 7.5 | | 9 | 11 | 7 | 10 | DNU | 10 | 10 | 16 |
| | RTPF | 7.5 | | 15 | NR | 23 | NR | 27 | 30 | 18 | 38 |
| | EN (ft) | | | | | | | | | | |
| | Novation | 25 | | 30 | 38 | 24 | 36 | DNU | 35 | 33 | 53 |
| | RTPF | 25 | | 50 | NR | 75 | NR | 89 | 100 | 62 | 125 |
| | Suction Line | 7/8 | | 7/8 | | 1–1/8 | | 1–1/8 | | 1–1/8 | |
| | Charge | | | | | | | | | | |
| | SI (kg) | | | | | | | | | | |
| | Novation | 5.5 | | 6.3 | 7.2 | 7.4 | 8.6 | DNU | 9.9 | 9.1 | 11.2 |
| | RTPF | 8.6 | | 9.4 | NR | 10.4 | NR | 11.3 | 13.0 | 12.2 | 14.3 |
| | EN (lbs) | | | | | | | | | | |
| | Novation | 12.2 | | 13.9 | 15.8 | 16.2 | 19.0 | DNU | 21.9 | 20.0 | 24.8 |
| | RTPF | 19.0 | | 20.7 | NR | 23.0 | NR | 24.9 | 28.7 | 26.8 | 31.6 |

**Legend:**

Equivalent Length – Equivalent tubing length, including effects of refrigeration specialties devices

Linear Length – Linear tubing length, feet

Liquid Line – Tubing size, inches OD.

Max Lift – Maximum liquid lift (indoor unit ABOVE outdoor unit only), at maximum permitted liquid line pressure drop
- Linear Length Less than 30 m (100 ft): Minimum 1.1° C (2.0° F) subcooling entering TXV
- Linear Length Greater than 30 m (100 ft): Minimum 0.3° C (0.5° F) subcooling entering TXV

Suction Line – Tube size, inches OD

Charge – Charge Quantity, lbs. Calculated for both liquid line sizes (where applicable), but only with larger suction line size (where applicable)

DNU – Do Not Use (pressure drop exceeds available subcooling in this model)

NR – Not Recommended (use smaller liquid tube size)

SI – Metric units of measure

EN – English units of measure (I–P)

**NOTE:** For applications with equivalent length greater than 57 m (188 ft) and/or linear length greater than 38 m (125 ft), contact your local Carrier representative.

## 38AUD 12-14 PIPING RECOMMENDATIONS (TWO-CIRCUIT UNIT)

**NOTE:** 38AUD requires TWO sets of refrigeration piping

| R–410A | Equivalent Length | | | | | | | | | |
|---|---|---|---|---|---|---|---|---|---|---|
| | **meter** | **0–12** | **12–23** | | **23–34** | | **34–46** | | **46–57** | |
| | **feet** | **0–38** | **38–75** | | **75–113** | | **113–150** | | **150–188** | |
| **Model** | Linear Length | | | | | | | | | |
| | meter | 0–7.5 | 7.5–15 | | 15–23 | | 23–30 | | 30–38 | |
| | feet | 0–25 | 25–50 | | 50–75 | | 75–100 | | 100–125 | |
| **38AUD*12** | Liquid Line | 3/8 | 3/8 | | 3/8 | 1/2 | 3/8 | 1/2 | 3/8 | 1/2 |
| | Max Lift | | | | | | | | | |
| | SI (m) | | | | | | | | | |
| | Novation | 7.5 | 15 | | 15 | 23 | 10 | 24 | 13 | 29 |
| | RTPF | 7.5 | 15 | | 15 | 23 | 10 | 27 | 11 | 32 |
| | EN (ft) | | | | | | | | | |
| | Novation | 25 | 50 | | 50 | 75 | 36 | 79 | 44 | 96 |
| | RTPF | 25 | 50 | | 50 | 75 | 36 | 89 | 39 | 106 |
| | Suction Line | 7/8 | 7/8 | | 7/8 | | 7/8 | | 1–1/8 | |
| | Charge | | | | | | | | | |
| | SI (kg) | | | | | | | | | |
| | Novation | 3.3 | 3.8 | | 4.2 | 5.3 | 4.7 | 6.1 | 5.1 | 6.9 |
| | RTPF | 4.9 | 5.4 | | 5.8 | 6.9 | 6.3 | 7.7 | 6.8 | 8.6 |
| | EN (lbs) | | | | | | | | | |
| | Novation | 7.3 | 8.3 | | 9.3 | 11.6 | 10.3 | 13.4 | 11.3 | 15.2 |
| | RTPF | 10.9 | 11.9 | | 12.9 | 15.2 | 13.9 | 17.0 | 14.9 | 18.8 |
| **38AUD*14** | Liquid Line | 3/8 | 1/2 | 5/8 | 1/2 | 5/8 | 1/2 | 5/8 | 1/2 | 5/8 |
| | Max Lift | | | | | | | | | |
| | SI (m) | | | | | | | | | |
| | Novation | 7.5 | 13 | 15 | 12 | 14 | 11 | 14 | 17 | 20 |
| | EN (ft) | | | | | | | | | |
| | Novation | 25 | 45 | 50 | 42 | 49 | 39 | 48 | 56 | 68 |
| | Suction Line | 7/8 | 7/8 | | 7/8 | | 1–1/8 | | 1–1/8 | |
| | Charge | | | | | | | | | |
| | SI (kg) | | | | | | | | | |
| | Novation | 4.6 | 5.8 | 6.6 | 6.6 | 7.8 | 7.6 | 10.7 | 9.4 | 12.0 |
| | EN (lbs) | | | | | | | | | |
| | Novation | 10.1 | 12.7 | 14.6 | 14.5 | 17.3 | 16.8 | 23.5 | 20.7 | 26.4 |

**Legend:**

Equivalent Length – Equivalent tubing length, including effects of refrigeration specialties devices

Linear Length – Linear tubing length, feet

Liquid Line – Tubing size, inches OD.

Max Lift – Maximum liquid lift (indoor unit ABOVE outdoor unit only), at maximum permitted liquid line pressure drop
- Linear Length Less than 30 m (100 ft): Minimum 1.1° C (2.0° F) subcooling entering TXV
- Linear Length Greater than 30 m (100 ft): Minimum 0.3° C (0.5° F) subcooling entering TXV

Suction Line – Tube size, inches OD

Charge – Charge Quantity, lbs. Calculated for both liquid line sizes (where applicable), but only with larger suction line size (where applicable)

DNU – Do Not Use (pressure drop exceeds available subcooling in this model)

NR – Not Recommended (use smaller liquid tube size)

SI – Metric units of measure

EN – English units of measure (I–P)

**NOTE:** For applications with equivalent length greater than 57 m (188 ft) and/or linear length greater than 38 m (125 ft), contact your local Carrier representative.

## 38AUD 16-25 PIPING RECOMMENDATIONS (TWO-CIRCUIT UNIT)

**NOTE:** 38AUD requires TWO sets of refrigeration piping

| R–410A | Equivalent Length | | | | | | | | | | |
|---|---|---|---|---|---|---|---|---|---|---|---|
| | **meter** | **0–12** | | **12–23** | | **23–34** | | **34–46** | | **46–57** | |
| | **feet** | **0–38** | | **38–75** | | **75–113** | | **113–150** | | **150–188** | |
| **Model** | Linear Length | | | | | | | | | | |
| | meter | 0–7.5 | | 7.5–15 | | 15–23 | | 23–30 | | 30–38 | |
| | feet | 0–25 | | 25–50 | | 50–75 | | 75–100 | | 100–125 | |
| **38AUD*16** | Liquid Line | 3/8 | 1/2 | 3/8 | 1/2 | 3/8 | 1/2 | 3/8 | 1/2 | 1/2 | |
| | Max Lift | | | | | | | | | | |
| | SI (m) | | | | | | | | | | |
| | Novation | 7.5 | NR | 15 | NR | 21 | 23 | 13 | 30 | 38 | |
| | RTPF | DNU | 7.5 | DNU | 15 | DNU | 23 | DNU | 30 | 36 | |
| | EN (ft) | | | | | | | | | | |
| | Novation | 25 | NR | 50 | NR | 71 | 75 | 43 | 100 | 125 | |
| | RTPF | DNU | 25 | DNU | 50 | DNU | 75 | DNU | 100 | 119 | |
| | Suction Line | 7/8 | | 1–1/8 | | 1–1/8 | | 1–1/8 | | 1–1/8 | |
| | Charge | | | | | | | | | | |
| | SI (kg) | | | | | | | | | | |
| | Novation | 5.8 | NR | 6.3 | NR | 7.0 | 8.0 | 7.5 | 8.9 | 9.8 | |
| | RTPF | DNU | 9.8 | DNU | 10.7 | DNU | 11.6 | DNU | 12.4 | 13.3 | |
| | EN (lbs) | | | | | | | | | | |
| | Novation | 12.9 | NR | 13.9 | NR | 15.4 | 17.7 | 16.5 | 19.6 | 21.6 | |
| | RTPF | DNU | 21.7 | DNU | 23.6 | DNU | 25.5 | DNU | 27.4 | 29.3 | |
| **38AUD*25** | Liquid Line | 1/2 | | 1/2 | | 1/2 | | 1/2 | 5/8 | 1/2 | 5/8 |
| | Max Lift | | | | | | | | | | |
| | SI (m) | | | | | | | | | | |
| | RTPF | 7.5 | | 15 | | 23 | | 20 | 27 | 23 | 32 |
| | EN (ft) | | | | | | | | | | |
| | RTPF | 25 | | 50 | | 75 | | 67 | 91 | 76 | 107 |
| | Suction Line | 7/8 | | 1–1/8 | | 1–1/8 | | 1–1/8 | | 1–1/8 | |
| | Charge | | | | | | | | | | |
| | SI (kg) | | | | | | | | | | |
| | RTPF | 9.4 | | 10.3 | | 11.2 | | 12.1 | 13.8 | 13.0 | 15.1 |
| | EN (lbs) | | | | | | | | | | |
| | RTPF | 20.7 | | 22.8 | | 24.7 | | 26.6 | 30.4 | 28.6 | 33.3 |

**Legend:**

| | |
|---|---|
| Equivalent Length – | Equivalent tubing length, including effects of refrigeration specialties devices |
| Linear Length – | Linear tubing length, feet |
| Liquid Line – | Tubing size, inches OD. |
| Max Lift – | Maximum liquid lift (indoor unit ABOVE outdoor unit only), at maximum permitted liquid line pressure drop<br>• Linear Length Less than 30 m (100 ft): Minimum 1.1° C (2.0° F) subcooling entering TXV<br>• Linear Length Greater than 30 m (100 ft): Minimum 0.3° C (0.5° F) subcooling entering TXV |
| Suction Line – | Tube size, inches OD |
| Charge – | Charge Quantity, lbs. Calculated for both liquid line sizes (where applicable), but only with larger suction line size (where applicable) |
| DNU – | Do Not Use (pressure drop exceeds available subcooling in this model) |
| NR – | Not Recommended (use smaller liquid tube size) |
| SI – | Metric units of measure |
| EN – | English units of measure (I–P) |
| **NOTE:** | For applications with equivalent length greater than 57 m (188 ft) and/or linear length greater than 38 m (125 ft), contact your local Carrier representative. |

# TYPICAL PIPING AND WIRING

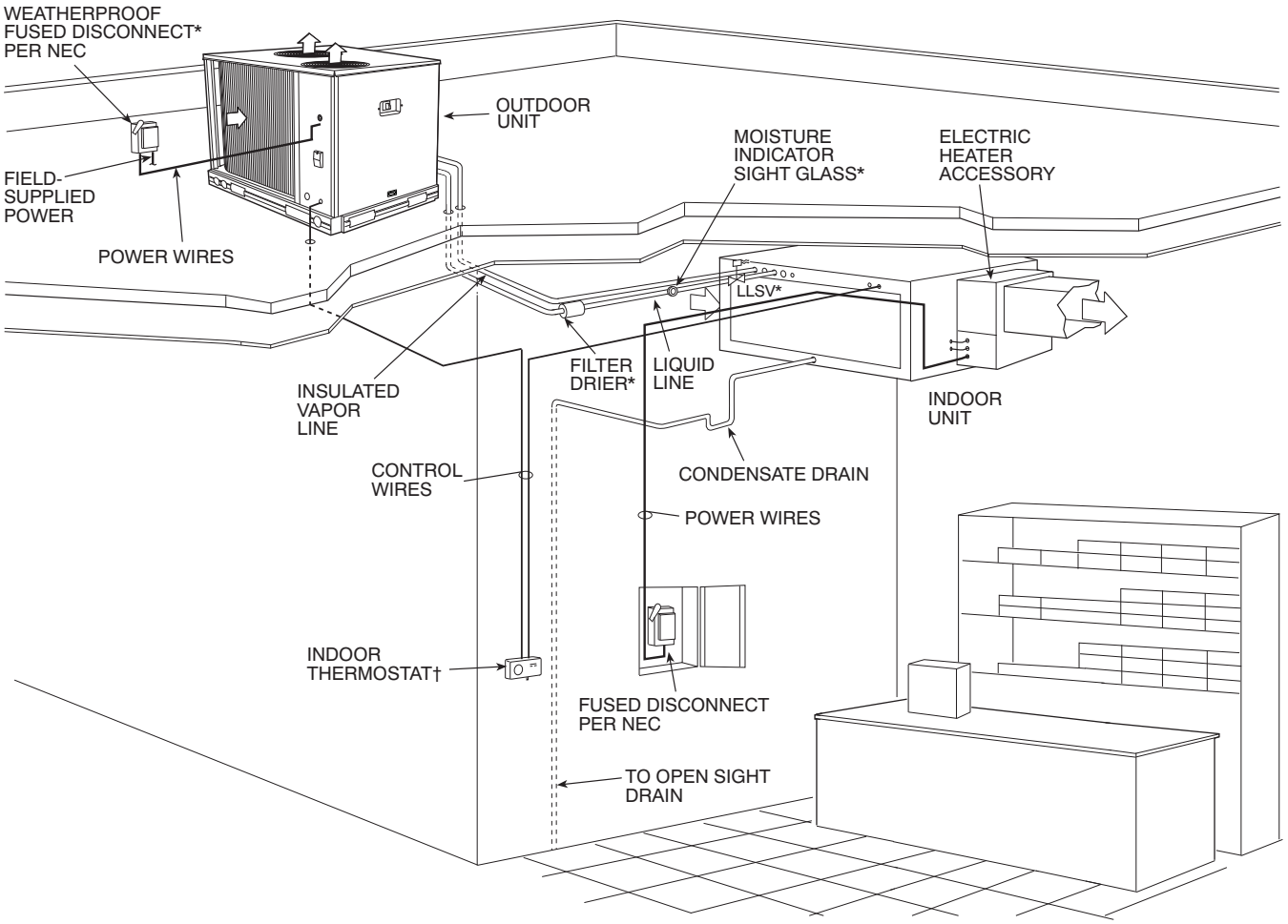


**LEGEND:**

NEC – National Electrical Code

TXV – Thermostatic Expansion Valve

* Field–supplied

† Double riser may be required. Consult condensing unit product data catalog for details.

**NOTES**:

1. All piping must follow standard refrigerant piping techniques. Refer to Carrier System Design Manual for details.
2. All wiring must comply with the applicable local and national codes.
3. Wiring and piping shown are general points-of-connection guides only and are not intended for, or to include all details for, a specific installation.
4. Liquid line solenoid valve (solenoid drop control) is recommended to prevent refrigerant migration to the compressor.
5. Internal factory-supplied TXVs not shown.

# GUIDE SPECIFICATIONS

## Commercial Air-Cooled Condensing Units

## HVAC Guide Specifications

Size Range: 18.3 kW to 59.2 kW

Carrier Model Numbers: **38AUZ, Single Circuit (07 - 08 Models) 38AUD, Dual Circuit (12, 14, 16, 25 Models)**

**Part 1 — General**

1.01 SYSTEM DESCRIPTION

Outdoor-mounted, air-cooled condensing unit suitable for on-the-ground or rooftop installation. Unit shall consist of a hermetic scroll air-conditioning compressor(s) assembly, an air-cooled coil, propeller-type condenser fans, and a control box. Unit shall discharge supply air upward as shown on contract drawings. Unit shall be used in a refrigeration circuit matched with a packaged air-handling unit.

1.02 QUALITY ASSURANCE

A. Unit shall be rated in accordance with AHRI Standard 340/360.

B. Unit construction shall comply with ANSI/ASHRAE 15 safety code latest revision and comply with NEC.

C. Unit shall be constructed in accordance with UL 1995 standard and shall carry the UL and UL, Canada label.

D. Unit cabinet shall be capable of withstanding 500-hour salt spray exposure per ASTM B117 (scribed specimen).

E. Air-cooled condenser coils for hermetic scroll compressor units 38AUZ and 38AUD shall be leak tested at 150 psig, and pressure tested at 650 psig.

F. Unit shall be manufactured in a facility registered to ISO 9001:2008 manufacturing quality standard.

1.03 DELIVERY, STORAGE, AND HANDLING

Unit shall be shipped as single package only, and shall be stored and handled according to unit manufacturer's recommendations.

1.04 WARRANTY (FOR INCLUSION BY SPECIFYING ENGINEER.)

**Part 2 — Products**

2.01 EQUIPMENT

A. General:

Factory-assembled, single piece, air-cooled condensing unit. Contained within the unit enclosure shall be all factory wiring, piping, controls, compressor, holding charge, and special features required prior to field start-up.

B. Unit Cabinet:

1. Unit cabinet shall be constructed of galvanized steel, bonderized and coated with a prepainted baked enamel finish.
2. A heavy-gauge roll-formed perimeter base rail with forklift slots and lifting holes shall be provided to facilitate rigging.

C. Condenser Fans:

1. Condenser fans shall be direct driven, propeller type, discharging air vertically upward.
2. Fan blades shall be balanced.
3. Condenser fan discharge openings shall be equipped with PVC-coated steel wire safety guards.
4. Condenser fan and motor shaft shall be corrosion resistant.

D. Compressor:

1. Compressor shall be of the hermetic scroll type .
2. Compressor shall be mounted on rubber grommets.
3. Compressors shall include overload protection.
4. Compressors shall be equipped with a crankcase heater.
5. Compressor shall be equipped with internal high pressure and high temperature protection.

E. Condenser Coils:

1. Standard Aluminum fin - Copper Tube Coils:

a. Standard evaporator and condenser coils shall have aluminum lanced plate fins mechanically bonded to seamless internally grooved copper tubes with all joints brazed.

b. Evaporator coils shall be leak tested to 150 psig, pressure tested to 450 psig, and qualified to UL 1995 burst test at 1775 psig.

c. Condenser coils shall be leak tested to 150 psig, pressure tested to 650 psig, and qualified to UL 1995 burst test at 1980 psig.

2. Optional Copper-fin evaporator and condenser coils:

a. Shall be constructed of copper fins mechanically bonded to copper tubes and copper tube sheets.

b. Galvanized steel tube sheets shall not be acceptable.

c. A polymer strip shall prevent coil assembly from contacting the sheet metal coil pan to minimize potential for galvanic corrosion between coil and pan.

3. Optional E-coated aluminum-fin evaporator and condenser coils:

a. Shall have a flexible epoxy polymer coating uniformly applied to all coil surface areas without material bridging between fins.

b. Coating process shall ensure complete coil encapsulation of tubes, fins and headers.

c. Color shall be high gloss black with gloss per ASTM D523-89.

d. Uniform dry film thickness from 0.8 to 1.2 mil on all surface areas including fin edges.

e. Superior hardness characteristics of 2H per ASTM D3363-92A and cross-hatch adhesion of 4B-5B per ASTM D3359-93.

f. Impact resistance shall be up to 160 in.-lb (ASTM D2794-93).

g. Humidity and water immersion resistance shall be up to minimum 1000 and 250 hours respectively (ASTM D2247-92 and ASTM D870-92).

h. Corrosion durability shall be confirmed through testing to be no less than 1000 hours salt spray per ASTM B117-90.

4. Standard All Aluminum Novation Coils:

a. Standard condenser coils shall have all aluminum Novation Heat Exchanger Technology design consisting of aluminum multi port flat tube design and aluminum fin. Coils shall be a furnace brazed design and contain epoxy lined shrink wrap on all aluminum to copper connections.

b. Condenser coils shall be leak tested to 150 psig, pressure tested to 650 psig, and qualified to UL 1995 burst test at 1980 psig.

5. Optional E-coated aluminum-fin, aluminum tube condenser coils:

a. Shall have a flexible epoxy polymer coating uniformly applied to all coil external surface areas without material bridging between fins or louvers.

b. Coating process shall ensure complete coil encapsulation, including all exposed fin edges.

c. E-coat thickness of 0.8 to 1.2 mil with top coat having a uniform dry film thickness from 1.0 to 2.0 mil on all external coil surface areas, including fin edges, shall be provided.

d. Shall have superior hardness characteristics of 2H per ASTM D3363-00 and cross-hatch adhesion of 4B-5B per ASTM D3359-02.

e. Shall have superior impact resistance with no cracking, chipping or peeling per NSF/ANSI 51-2002 Method 10.2.

F. Refrigeration Components:

Refrigeration circuit components shall include liquid line service valve, suction line service valve, a full charge of compressor oil, and a partial holding charge of refrigerant.

G. Controls and Safeties:

1. Minimum control functions shall include:

f. Control wire terminal blocks.

g. Compressor lockout on auto-reset safety until reset from thermostat.

h. Each unit shall utilize the Comfort Alert™ Diagnostic Board that provides:

(1.) System Pressure Trip fault code indication

(2.) Short Cycling fault code indication

(3.) Locked Rotor fault code indication

(4.) Open Circuit fault code indication

(5.) Reverse Phase 3 fault code indication

(6.) Welded Contactor fault code indication

(7.) Low Voltage fault code indication

(8.) Anti-short cycle protection

(9.) Phase reversal protection

2. Minimum safety devices which are equipped with automatic reset (after resetting first at thermostat), shall include:
   a. High discharge pressure cutout.
   b. Low pressure cutout.

H. Operating Characteristics:
1. The capacity of the condensing unit shall meet or exceed _____ Btuh at a suction temperature of _____°C/F. The power consumption at full load shall not exceed _____ kW.
2. The combination of the condensing unit and the evaporator or fan coil unit shall have a total net cooling capacity of _____ Btuh or greater at conditions of _____ cfm entering-air temperature at the evaporator at _____°C/F wet bulb and _____°C/F dry bulb, and air entering the condensing unit at _____°C/F.
3. The system shall have an EER of _____ Btuh/Watt or greater at standard AHRI conditions.
4. Standard unit shall be capable to operate up to 52°C (125°F) and down to 4°C (40°F)

I. Electrical Requirements:
1. Nominal unit electrical characteristics shall be _____ v, 3-ph, 50 Hz. The unit shall be capable of satisfactory operation within voltage limits of ____ v to _____ v.
2. Unit electrical power shall be single-point connection.
3. Unit control circuit shall contain a 24-v transformer for unit control.

J. Special Features:
1. Low-Ambient Temperature Control:
   A low-ambient temperature control shall be available as a factory-installed option or as a field-installed accessory. This low-ambient control shall regulate speed of the condenser-fan motors in response to the saturated condensing temperature of the unit. The control shall maintain correct condensing pressure at outdoor temperatures down to –29°C (-20°F).
2. Unit-Mounted, Non-Fused Disconnect Switch:
   Switch shall be factory-installed and internally mounted. NEC and UL-approved non-fused switch shall provide unit power shutoff. Switch shall be accessible from outside the unit and shall provide power off lockout capability. Non-fused disconnect cannot be used when unit MOCP electrical rating exceeds 80 amps.
3. Thermostat Controls:
   a. Programmable multi-stage thermostat shall have 7-day clock, holiday scheduling, large backlit display, remote sensor capability, and Title 24 compliance.
   b. Commercial Electronic Thermostat shall have 7-day time clock, auto-changeover, multi-stage capability, and large LCD (liquid crystal display) temperature display.
4. Louvered hail Guard Package:
   Louvered hail guard package shall protect coils against damage from hail and other flying debris.
5. Condenser Coil Grille (Novation 07-14 models only):
   Grille shall add decorative appearance to unit and protect condenser coil from large objects and vandalism.



Copyright 2010 Carrier Corp. • 7310 W. Morris St. • Indianapolis, IN 46231 Printed in U.S.A. Edition Date: 11/10 **Catalog No: 38AU–C01PD**

**Manufacturer reserves the right to change, at any time, specifications and designs without notice and without obligations.** Replaces: NEW

Acoustic Associates
*Specialists in Hearing and Acoustics*

12172 Route 47 - #218, Huntley, Illinois 60142
Office: *847-359-1068* • Fax: *847-359-1207*
Website: www.AcousticAssociates.com

Tom Thunder, AuD, FAAA, INCE – *Principal*
Greg Andorka, BSEE - *Senior Field Engineer*
E-mail: info@AcousticAssociates.com

# Noise Emissions
# At the Chicago Fuller Car Wash

June 28, 2107

We visited the Fuller Car Wash at 2146 Rockwell in Chicago to conduct sound level testing. This testing was performed to obtain data that could be used to project sound levels at residential locations near similar car washes at other locations.

The blowers used to dry the cars dominate the car wash noise. The sound emissions of the spray nozzles and conveyor mechanisms are secondary and radiate much lower sound levels. In addition, the sprayers and conveyor emit a higher frequency sound that decays more rapidly outside the car wash due to air absorption. Accordingly, our focus was on blower noise.

**Figure 1** is an aerial view of the car wash on Rockwell and Cermak. The entrance faces Rockwell to the east while the exit faces a 3-story, brick building to the west. The doorways are roughly 10x10 feet.

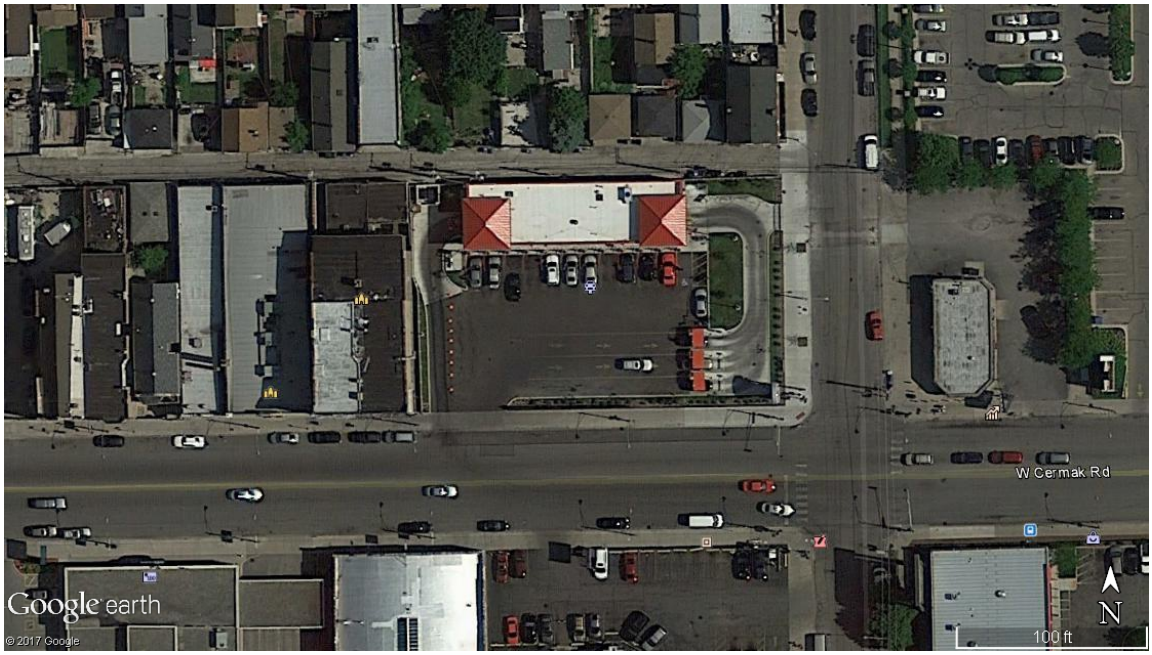


**Figure 1 – An aerial view of the car wash. The entrance faces Rockwell to the east.**

**Figure 2** shows a view of the car wash tunnel from the exit door. There are ten (10) centrifugal blowers attached to steel poles. Two (2) blowers are located on each side and are the closest to the exit door. They are only several feet from the exit doorway. Six (6) blowers are located on overhead poles. The inlets are open inlets with no ductwork. Each blower has its own discharge nozzle so there is no discharge ductwork.

# Procedure

Measurements were made at both the exit and the entrance to quantify the difference in noise emissions due to the long tunnel effect. We also made measurements at $0^o$ azimuth (on axis) and $90^o$ azimuth to quantify the difference due to the directivity of the tunnel.

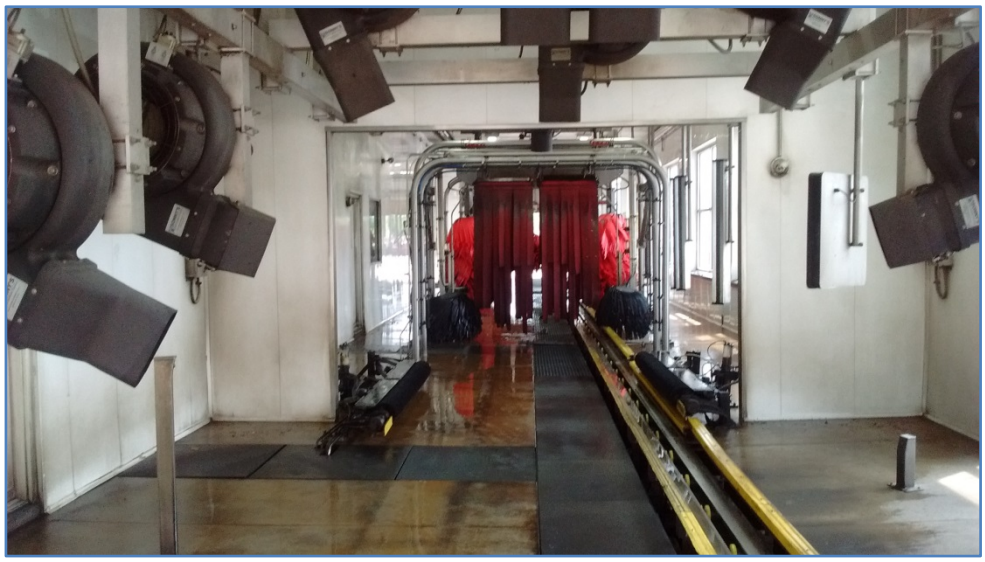

**Figure 2 - View of the car wash exit showing the blowers, which are positioned a few feet from the exit door.**

While a measurement distance of 25-50 feet is optimum for acoustical reasons, measurement locations at this site were constrained because of building and site configuration elements. Consequently the actual distances ranged from 10 to 33 feet.

We recorded the noise using a precision microphone and a professional grade digital recorder. A calibration tone was placed on the recording to ensure a proper analysis. Professional sound editing software was used to listen to the recording, document the annotations, and evaluate the temporal variations in noise.

We used professional grade software to analyze the recording to generate the overall sound level at 1-second intervals. **Figure 3** gives a plot of these 1-second sound level measurements from the exit and entrance doors and at $0^o$ and $90^o$ azimuth angles to the doors. This graph shows the rise and fall of the blower noise as they turn on and off. The figure also shows the fluctuation of blower noise as the car moves through the blower area.

We used the same sound analysis software to generate sound spectra; specifically, we generated the sound level at each of 11 different frequencies across the audible frequency range. A spectral analysis is important because the noise from the blower varies as a function of frequency. Also, how sound decays over distance varies as a function of frequency. **Figure 4** shows the results of this analysis. In this chart, we normalized all the data to a distance of 50 feet for easy comparison. We also corrected the exit data since it was confounded by reflections from the nearby building. The entrance data at 90 degrees was corrected to extract the influence of background noise. Finally, we smoothed the spectra slightly because there was some jaggedness that was likely a result of building reflections or tunnel resonance.

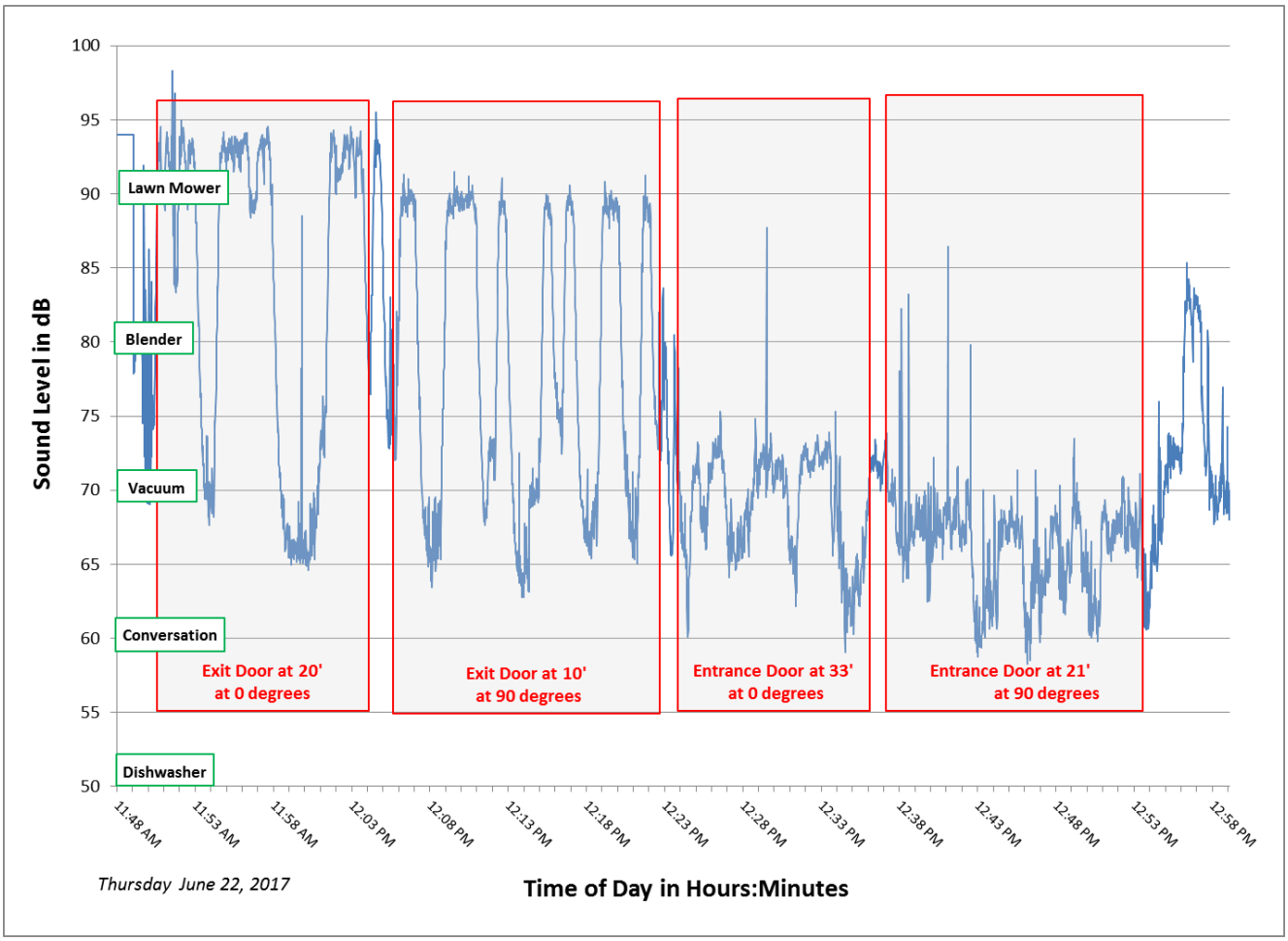


**Figure 3 - Time series sound level of the recorded sample taken at the car wash.**

# Findings

As seen in **Figure 4**, all of the noise spectra show a prominence in the 500-2000 Hz range. For reference, a tea kettle whistle is about 1000 Hz. Because the fans are not large fans, there is not much low frequency energy. And because there is no ductwork, there is not much high frequency noise from aerodynamic flow.

The most important finding is the overall (total) A-weighted level shown on the left-hand side of **Figure 4**. The graph clearly shows that the exit side generates 14 dB greater noises than the entrance. This means the exit is three times louder than the entrance. This fact is important in orientating the exit toward less sensitive receivers.

> The **total A-weighted sound level** is the overall sound level with a filter applied to the noise measurement that diminishes the levels in the low frequencies below 500 Hz. The A-weighting filter is the most commonly used metric in noise assessment because it mimics the low-frequency roll-off of the ear.

**Figure 4** also reveals that there is a significant directivity character to the car wash. In other words, the tunnel radiated sound significantly along its axis (at $0^o$ azimuth) and 10 dB less to the side (at $90^o$). A 10 dB reduction means that the noise is half as loud to the side as it is directly in front. This fact has important implications in siting the car wash tunnel relative to receivers near the facility.

Table 1 below, summarizes our findings.

**Table 1 - Sound level emissions from a car wash with ten centrifugal blowers**

| Measurement Location | Sound Level at 50 feet |
|---|---|
| Exit at 0 degrees | 83 dB |
| Exit at 90 degrees | 73 dB |
| Entrance at 0 degrees | 68 dB |
| Entrance at 90 degrees | 58 dB |

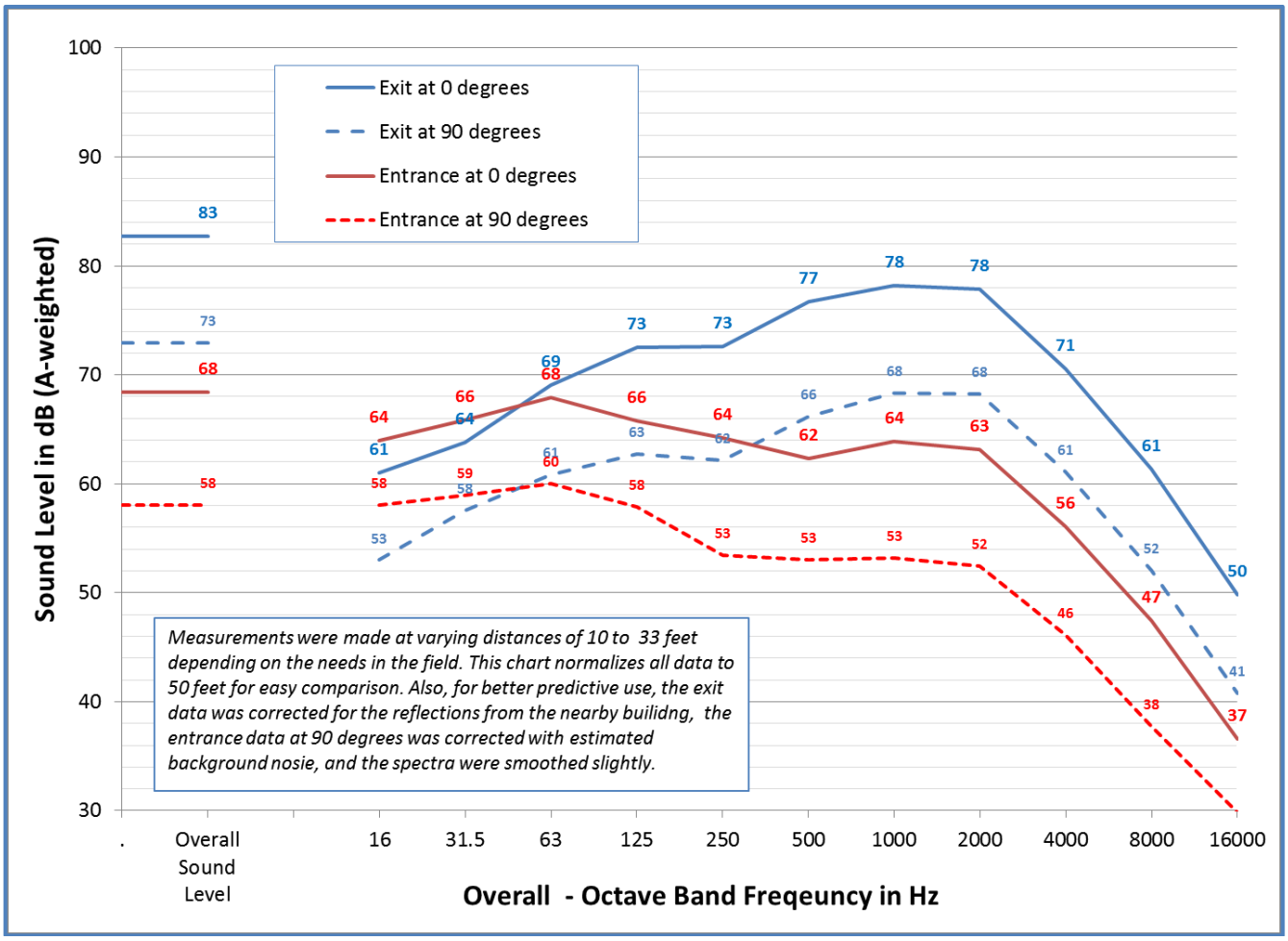


**Figure 4- Overall sound level and octave band sound levels measured at the car wash.**

# Design Considerations

The loudness of the sound heard by residents near a car wash will depend on the following:

1. **Ambient noise** – Hi ambient background noise often prevents a car wash from being heard or annoying. Fortunately, most car washes are located along heavily traveled roads where the ambient noise is high. In most cases, it is helpful to measure the ambient across a full day to help village boards understand the real (not perceived) impact of a car wash.

2. **Distance** – The farther the residents, the lower the sound level. Distance is a major factor in hearing a car wash. Sound drops off at 6 dB per doubling of distance. For example, a car wash at 200 feet is 12 dB lower – or half as loud – than the same was is at 50 feet.

3. **Fences** – A fence can help reduce the intensity of car wash emissions. Unfortunately, the typical board-on-board fence offers minimal attenuation. To be effective, it must be solid. Also, the typical 6-foot fence is ineffective. Heights of 10-15 feet are usually required to achieve a significant noise reduction.

4. **Orientation** – As indicated above, it is best to "point" the exit away from sensitive areas. Based on our data, the exit is triple the loudness for residents facing the entrance at the same distance.

5. **Angle** – The data show that if there are nearby residents, it is best to orientate the wash so that its axis is perpendicular to the line-of-sight to the residents. This takes advantage of the directivity of a car wash where emissions are substantially reduced at angles greater than $60^o$.

## Considerations For future Projects

The sound levels in Table 1 give the sound level emissions to be used for future projects that have similar equipment. The table shows that the emissions would be the highest for residents on the exit side of the car wash – especially those on axis with the wash tunnel. For residents at $90^o$ off axis (from the exit or entrance), the sound level drops 10 dB (half as loud). You can interpolate the sound level for residents at angles between $0^o$ and $90^o$.

The levels in Table 1 are given for 50 feet. For residents at greater distances, the level drops off at 6 dB per doubling of distance. So a resident at 100 feet would be 6 dB less than at 50 feet.

Most noise codes have a limit of 55 dB for daytime operations. So if the emissions are higher than this, you should consider reorienting the exit toward a commercial building of the street. If this is difficult, then you can achieve a 10 dB reduction with a well-designed sound fence. Finally, you can search for quieter equipment or reduce the number or speed of the blowers. A door or mass-loaded vinyl strips at the exit would work well and reduce the noise 10-20 dB. But the wash tunnel would need to be designed to allow the door to remain closed while the blowers are on.

If a town is most interested in the impact a wash has on residential neighbors, then an ambient noise study is recommended. In many cases, since car washes are near busy streets, the ambient noise is higher than the towns 55 dB limit. In this case, there is no sense in designing a car wash to meet the stricter 55 dB limit when the ambient noise is already higher. A noise study is also recommended to justify a wash being open later than when the town wants it to close. This is because the ambient noise in the area may not actually drop until after 9:00 PM or even as late as 11:00 PM.

Submitted,

Thomas Thunder, AuD, FAAA, INCE Bd. Cert.
*Principal Audiologist and Acoustical Specialist*
*Adjunct Faculty – Northern Illinois University and Rush University*

# Appendix D

Yucaipa Point Traffic Impact Analysis Study

Final Report

# Yucaipa Pointe
# Traffic Impact Analysis

Prepared for VantageOne Real Estate Investments
By IBI Group

January 10, 2019

# Table of Contents

**1. Introduction ..... 1**

*1.1 Report Sections ..... 1*

**2. Analysis and Methodology ..... 4**

*2.1 Analysis Scenarios and Time Period ..... 4*

*2.2 Analysis Study Area Locations ..... 4*

*2.3 Signalized Intersections ..... 5*

*2.4 Unsignalized Intersections ..... 6*

*2.5 Caltrans Intersections ..... 6*

*2.6 Standards of Significance ..... 6*

*2.7 Roadway Segment Analysis ..... 7*

*2.8 Freeway Mainline Analysis ..... 7*

**3. Existing (Year 2018) Conditions ..... 8**

*3.1 Project Location and Study Area ..... 8*

*3.2 Roadway Network ..... 8*

*3.3 Existing Intersection Geometry and Traffic Volumes ..... 8*

*3.4 Existing Intersection LOS ..... 11*

*3.5 Existing Roadway Segment LOS ..... 11*

*3.6 Existing Freeway Mainline LOS ..... 12*

**4. Future Traffic Volume Development ..... 13**

*4.1 Future Traffic Volumes ..... 13*

4.1.1 Ambient Traffic Growth ..... 13

4.1.2 Cumulative Projects ..... 13

**5. Future (Year 2020) No Project ..... 15**

*5.1 Future (Year 2020) Traffic Control and Traffic Volumes ..... 15*

*5.2 Future (Year 2020) Level of Service (LOS) ..... 15*

*5.3 Future (Year 2020) Roadway Segment LOS ..... 18*

*5.4 Future (Year 2020) Freeway Mainline LOS ..... 18*

**6. Proposed Project ..... 19**

*6.1 Project Description ..... 19*

*6.2 Trip Generation ..... 19*

*6.3 Trip Distribution and Assignment ..... 19*

**7. Project Impact Analysis ..... 23**

*7.1 Existing (Year 2018) With Project Impact Analysis ..... 23*
7.1.1 Existing (Year 2018) With Project Intersection LOS ..... 23
7.1.2 Existing (Year 2018) With Project Roadway Segment LOS ..... 25
7.1.3 Existing (Year 2018) With Project Freeway Mainline LOS ..... 25

*7.2 Future (Year 2020) With Project Impact Analysis ..... 26*
7.2.1 Future (Year 2020) With Project Intersection LOS ..... 26
7.2.2 Future (Year 2020) With Project Roadway Segment LOS ..... 28
7.2.3 Future (Year 2020) With Project Freeway Mainline LOS ..... 28

**8. Site Access and Circulation Analysis ..... 29**

*8.1 Project Driveway LOS ..... 29*

*8.2 Project Driveway Queuing Analysis ..... 29*

**9. Mitigation Measures ..... 32**

*9.1 Existing (Year 2018) With Project Intersection Impacts ..... 32*

*9.2 Existing (Year 2018) With Project Roadway Impacts ..... 33*

*9.3 Existing (Year 2018) With Project Freeway Impacts ..... 33*

*9.4 Future (Year 2020) With Project Intersection Impacts ..... 33*

*9.5 Future (Year 2020) With Project Roadway Impacts ..... 34*

*9.6 Future (Year 2020) With Project Freeway Impacts ..... 34*

**10. Conclusion ..... 35**

**Appendix A: Traffic Counts ..... A**

**Appendix B: LOS Worksheets ..... B**

**Appendix C: Freeway Mainline Analysis ..... C**

**Appendix D: LOS Worksheets for Driveways ..... D**

**Appendix E: Mitigated LOS Worksheets ..... E**

**Appendix F: Yucaipa Boulevard Widening Project Plan..... F**

# List of Figures

Figure 1: Project Location ..... 2
Figure 2: Project Site Plan ..... 3
Figure 3: Study Area Intersection Lane Geometry and Existing 2018 Control ..... 9
Figure 4: Existing (Year 2018) AM and PM Peak Hour Traffic Volumes ..... 10
Figure 5: Cumulative Project Locations ..... 14
Figure 6: Study Area Intersections Lane Geometry and Future 2020 Control ..... 16
Figure 7: Future (Year 2020) No Project AM and PM Peak Hour Traffic Volumes ..... 17
Figure 8: Project Trip Distribution ..... 21
Figure 9: Project Trip Assignment AM and PM Peak Hour Traffic Volumes ..... 22
Figure 10: Existing (Year 2018) With Project AM and PM Peak Hour Traffic Volumes ..... 24
Figure 11: Future (Year 2020) With Project AM and PM Peak Hour Traffic Volumes ..... 27
Figure 12: Project Access Points ..... 31

# 1. Introduction

VantageOne Real Estate Investments is proposing to build a commercial retail and service development known as Yucaipa Pointe. The project site is located in the City of Yucaipa, south of Yucaipa Boulevard, between Avenue E and 18th Street. Figure 1 shows the project location. The purpose of this report is to conduct a focused traffic analysis for the proposed project. This project is consistent with the land use plan contained in the City's 2015 General Plan. Given this condition, the City identified a focused traffic analysis as the most appropriate scope for this traffic study.

The traffic analysis has been prepared to assess the potential circulation impacts associated with the construction and operation of the new commercial retail and service development. The project proposes approximately 137,000 SF of shopping center, and would include restaurants, fast food establishments, shops, a movie theater, a health club and a car wash.

Two access locations to the shopping center are proposed along Yucaipa Boulevard: primary access to will be provided via a new traffic signal at Knollhaven Lane/Yucaipa Boulevard. A right-turn in/out driveway will be provided on Yucaipa Boulevard between Avenue E and Knollhaven Lane. Three secondary access driveways on the west boundary of the project area will be provided on Avenue E between Yucaipa Boulevard and Dunlap Boulevard and another two driveways on the east side of the project on 18th Street between Yucaipa Boulevard and Avenue E. The proposed site plan is illustrated in Figure 2.

## 1.1 Report Sections

This report consists of the following sections:

1. Introduction
2. Analysis and Methodology
3. Existing (Year 2018) Conditions
4. Future Traffic Volume Development
5. Future (Year 2020) No Project Conditions
6. Proposed Project
7. Project Impact Analysis (Existing and Future With Project Conditions)
8. Access and Circulation Analysis
9. Mitigation Measures
10. Conclusion

Section 1 provides a brief description of the project and its characteristics. Section 2 presents the methodology used to perform the traffic analysis. Section 3 describes the existing land use, roadway network, intersections, and traffic volume in the study area. Sections 4 and 5 present the traffic volume forecast due to future development and growth in the project area for the Future (Year 2020) No Project scenario. Section 6 includes a description of the project, the proposed trip generation and trip distribution assumptions. Section 7 summarizes any impacts associated with implementation of the project under Existing and Future Conditions. An access and internal circulation analysis is provided in Section 8, which evaluates the performance of the access driveways to the proposed site. Section 9 details any necessary mitigation due to potential impacts caused by the project and finally the traffic study conclusions are presented in Section 10.

# Figure 1 - Project Location

Legend

- Project Area
- # Study Intersection
- Signalized Intersection
- Unsignalized Intersection

# Figure 2 - Project Site Plan

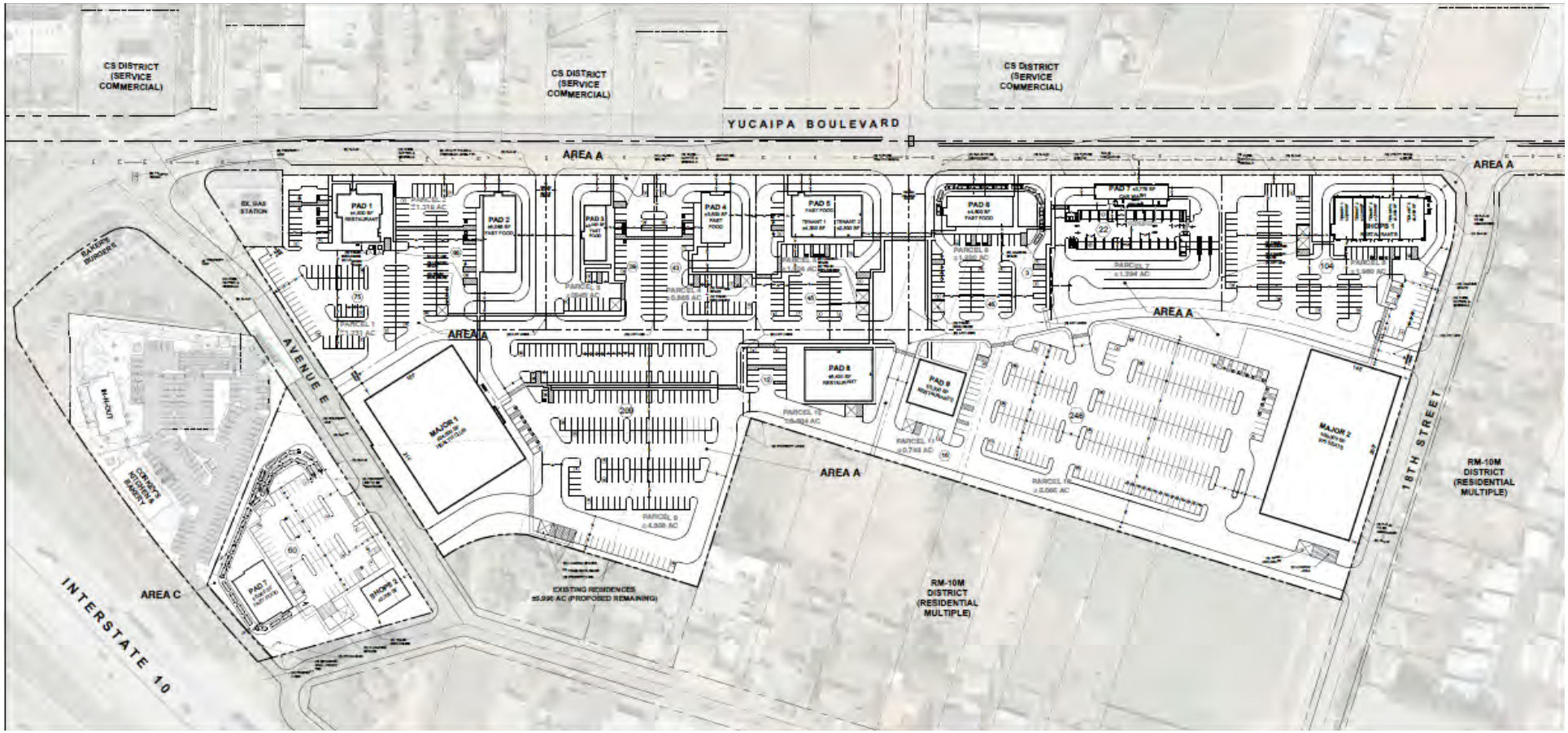

# 2. Analysis and Methodology

The analysis methodology used to perform the traffic analysis is consistent with the City of Yucaipa General Plan (October 2015), Caltrans' Guide for the Preparation of Traffic Impact Studies (December 2002), and the San Bernardino County of Governments (SANBAG) Congestion Management Program (July 2016). The methodology used to assess the operation of signalized intersections in San Bernardino County is the 2010 Highway Capacity Manual (HCM) methodology. Analysis of signalized and unsignalized intersections was conducted using the Synchro (Version 10) traffic analysis software.

## 2.1 Analysis Scenarios and Time Period

The traffic analysis for the Yucaipa Pointe development will include the following scenarios:

- Existing Year (2018) – No project
- Future Year (2020) – No Project
- Existing Year (2018) – With Project
- Future Year (2020) – With Project

Future (Year 2020) was selected as it coincides with the anticipated opening year of the proposed project. An analysis of the AM and PM peak hour for each scenario is included in this report. The AM peak period is between 7:00AM and 9:00AM and the PM peak period is between 4:00PM and 6:00PM.

## 2.2 Analysis Study Area Locations

Study area intersections were selected based on their locations within the network. More specifically, the selected study intersections are located at key access points for the proposed project where the most traffic volumes would be expected. These intersections were selected to provide a focused analysis of the project's potential traffic impacts.

Study intersections for the Yucaipa Pointe development, selected in coordination with City of Yucaipa staff, include the following intersections:

1. Yucaipa Blvd and Interstate 10 (I-10) Eastbound On-Ramp
2. Yucaipa Blvd and I-10 Westbound On-Ramp
3. Yucaipa Blvd and Avenue E
4. Knollhaven Lane and Yucaipa Blvd
5. 18th Street and Yucaipa Blvd
6. Avenue E and Dunlap Blvd.

The following roadway segments were selected for analysis:

A. Yucaipa Blvd between Avenue E and WB I-10 Ramp
B. Yucaipa Blvd between Avenue E and 18th Street
C. Yucaipa Blvd between Avenue E and 17th Street
D. Avenue E between Yucaipa Blvd and Dunlap Blvd
E. Dunlap Blvd south of Avenue E
F. Avenue E between Dunlap Blvd and 18th Street
G. Avenue E between 18th Street and 17th Street

The following freeway mainline segments were selected for analysis:

H. I-10 Freeway south of Yucaipa Blvd to Live Oak Canyon Road

I. I-10 Freeway north of Yucaipa Blvd to Wabash Road

## 2.3 Signalized Intersections

The HCM methodology defines LOS as a qualitative measure that describes operational conditions within a traffic stream, generally in terms of such factors as speed and travel time, freedom to maneuver, traffic interruptions, comfort and convenience, and safety. The criteria used to evaluate LOS conditions vary based on the type of roadway and whether the traffic flow is considered interrupted or uninterrupted. The six qualitative categories of LOS and corresponding average delay that have been defined are presented below:

**Table 1: Categories of LOS from HCM**

| LOS | Description | Delay (sec) |
|---|---|---|
| A | No approach phase is fully utilized by traffic, and no vehicle waits longer than one red indication. Typically, the approach appears quite open, turns are made easily, and nearly all drivers find freedom of operation. | 0 -10 |
| B | This service level represents stable operation, where an occasional approach phase is fully utilized, and a substantial number are nearing full use. Many drivers begin to feel restricted within platoons of vehicles. | 10 – 20 |
| C | This level still represents stable operating conditions. Occasionally, drivers may have to wait through more than one red signal indication, and backups may develop behind turning vehicles. Most drivers feel somewhat restricted, but not objectionably so. | 20 – 35 |
| D | This level encompasses a zone of increasing restriction approaching instability at the intersection. Delays to approaching vehicles may be substantial during short peaks within the peak period; however, enough cycles with lower demand occur to permit periodic clearance of developing queues, thus preventing excessive backups. | 35 – 55 |
| E | Capacity occurs at the upper end of this service level. It represents the most vehicles that any particular intersection approach can accommodate. Full utilization of every signal cycle is attained no matter how great the demand. | 55 - 80 |
| F | This level describes forced flow operations at low speeds, where volumes exceed capacity. These conditions usually result from queues of vehicles backing up from a restriction downstream. Speeds are reduced substantially, and stoppages may occur for short or long periods of time due to the congestion. In the extreme case, speed can drop to zero. | 80 or more |

Source: Highway Capacity Manual (2010)

Consistent with SANBAG CMP guidelines, the following peak hour factors and lane saturation flow rates were utilized in the analysis to determine intersection LOS:

- Peak Hour Factor: 0.92
- Saturation Flow Rate
    - Exclusive through lanes – 1,800 vehicles per lane per hour (vplph)
    - Exclusive right turn lanes – 1,800 vehicles per lane per hour (vplph)

  - Exclusive left turn lanes – 1,700 vplph (1,600 per lane for dual left turn lanes)
- Signal Cycle Lengths – Minimum 60 seconds and maximum 130 seconds
- Credit for "de facto" right turn lanes (locations where a right turn lane is not striped, but enough width is provided such that vehicles are able to conduct right turns without disrupting through traffic in a shared through-right lane). A minimum of 19 feet from curb line to lane stripe is required.

## 2.4 Unsignalized Intersections

The two types of unsignalized intersections include two-way stop-controlled (TWSC) and all-way stop-controlled (AWSC). The delay range for unsignalized intersections is different from those of signalized intersections primarily due to driver expectation. The expectation is that signalized intersections are designed to carry higher volumes of traffic and therefore higher levels of delay are acceptable. The HCM methodology estimates the delay based on the worst approach at unsignalized intersections. Table 2 includes the LOS ranges for both intersection types.

**Table 2: LOS for Unsignalized intersections**

| LOS | Description | Delay (sec) |
|---|---|---|
| A | Little or no delays | 0 – 10 |
| B | Short traffic delays | 10 – 15 |
| C | Average traffic delays | 15 – 25 |
| D | Long traffic delays | 25 – 35 |
| E | Very long traffic delays | 35 – 50 |
| F | Extreme traffic delays with intersection capacity exceeded | 50 or more |

Source: Highway Capacity Manual (2000), Chapter 17.

## 2.5 Caltrans Intersections

Per the Caltrans *Guide for the Preparation of Traffic Impact Studies*, intersections under the jurisdiction of Caltrans are also analyzed using the HCM methodology.

## 2.6 Standards of Significance

The City of Yucaipa General Plan establishes LOS C as the minimum acceptable level of service (LOS) on all intersections and road segments with the exception of the following two conditions:

- At roadway intersections where traffic movements are controlled by roundabouts, LOS D shall be acceptable
- On roadway segments where a roundabout controls at least one of the intersections at the ends of the segment, the lower half of LOS D shall be acceptable (V/C ratio of 0.849 or better).

All intersections and roadways that are forecast to operate with levels of service D, E or F are expected to be mitigated to the appropriate minimum standard or to conditions consistent with the no project condition. Some of the intersections fall under Caltrans jurisdiction, and the agency targets LOS at the transition between LOS "C" and LOS "D". For intersection analysis, this limit is the equivalent of having a delay of about 55 seconds per vehicle using the HCM 2010 methodology.

## 2.7 Roadway Segment Analysis

A LOS analysis was prepared on existing roadway segments within the study area using daily roadway capacities. The roadway segment capacities are approximate figures only, and are used at the General Plan level to assist in determining the roadway functional classification needed to meet traffic demand. Roadway segment analysis is typically performed for planning purposes and are affected by such factors as intersections (spacing, configuration, and control features), degree of access control, roadway grades, design geometrics (horizontal and vertical alignment standards), sight distance, vehicle mix (truck and bus traffic), and pedestrian and bicycle traffic.

Table 3 presents the City of Yucaipa roadway segment capacities and LOS thresholds for each facility type.

**Table 3: Daily Roadway Segment Capacities**

| Facility Type | Lane Geometry | A | B | C | D | E |
|---|---|---|---|---|---|---|
| Major Highway | 6 lanes, divided | 35,400 | 41,300 | 47,200 | 53,100 | 59,000 |
| Major Highway | 4 lanes, divided | 22,800 | 26,600 | 30,400 | 34,200 | 38,000 |
| Secondary Highway | 4 lanes, undivided | 18,000 | 21,000 | 24,000 | 27,000 | 30,000 |
| Controlled/Limited Access Collector Street | 2 lanes, undivided | 9,600 | 11,000 | 12,800 | 14,400 | 16,000 |
| Mountain Major | 2 lanes, undivided | 9,600 | 11,000 | 12,800 | 14,400 | 16,000 |
| Local Street | 2 lanes, undivided | 9,600 | 11,000 | 12,800 | 14,400 | 16,000 |

Source: City of Yucaipa General Plan, Mountain Major capacities assumed to be the same as local street

## 2.8 Freeway Mainline Analysis

The mainline analysis was conducted using HCS 10 software consistent with Caltrans requirements. For freeway segments, the measure used to evaluate LOS is density. As stated in the HCM, the upper value shown for LOS E (55.0 passenger cars per mile per lane – pc/mi/in) is the maximum density at which sustained flows at capacity are expected to occur. Deterioration from acceptable LOS A through E to unacceptable LOS F is considered an impact. Furthermore, an increase of 100 trips or more to any segment already operating at LOS F would be considered impacted.

# 3. Existing (Year 2018) Conditions

This section presents an overview of the existing roadway system within the study area and the methodology used to determine existing traffic volumes.

## 3.1 Project Location and Study Area

The proposed project site is located on a vacant land parcel south of Yucaipa Boulevard, between Avenue E to the west and 18th Street to the east. The area is bordered to the south by existing single family homes.

## 3.2 Roadway Network

Key roadway facilities that border the study area are described below. The descriptions of lane configurations are based on designations per the City of Yucaipa's General Plan Circulation Element.

**Yucaipa Boulevard**: Yucaipa Boulevard is located north and west of the proposed project site and is currently a four lane divided highway designated as an east-west Major highway. Yucaipa Boulevard connects to the I-10 freeway ramps to the west of the project. Yucaipa Boulevard will be reconfigured to a 6 lane divided highway by the proposed 2020 opening date of the project.

**Avenue E**: Avenue E borders the west and south of the project site and is designated as a local street in this section. It is a two lane undivided roadway. Avenue E will provide two new access points to Area A of the proposed development on the west side of the street, and one access point to Area C on the east side of the street.

**18th Street**: 18th Street borders the east of the project site and is designated as a local street. It is a two lane undivided roadway. 18th Street will provide two entrance points to Area A of the proposed development on the east side of the street. The west side of the street are single family homes.

**Knollhaven Lane**: Knollhaven Lane is an unpaved roadway running north-south that intersects with Yucaipa Boulevard. The proposed project will install a traffic signal at this location, improving all approaches at its intersection with Yucaipa Boulevard.

## 3.3 Existing Intersection Geometry and Traffic Volumes

The six (6) study area intersections Existing (Year 2018) lane geometry and control is illustrated in Figure 3. Manual intersection turning movement counts were collected in 15-minute intervals from 7:00 AM to 9:00 AM and 4:00 PM to 6:00 PM on Tuesday December 4th, 2018. Average Daily Traffic (ADT) counts were collected over a 24-hour period on the same day at each of the seven roadway segments. Freeway mainline volumes at the two locations were obtained from Caltrans' Traffic Data Branch (2017). Existing (Year 2018) AM and PM peak hour turning movement count volumes is presented in Figure 4. Traffic count data is included in Appendix A.

# Figure 3 - Study Area Intersection Lane Geometry and Existing 2018 Control

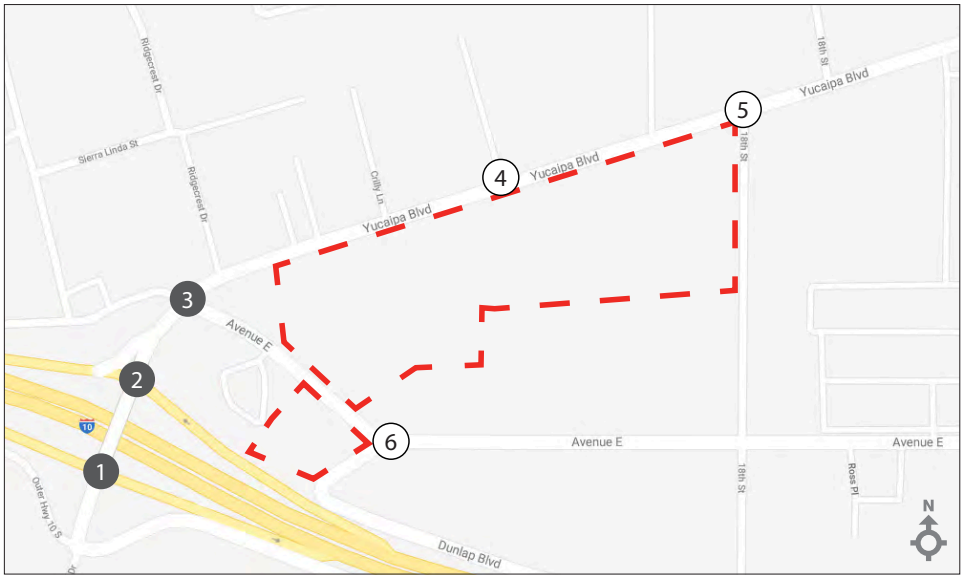


Legend

- Project Area
- Study Intersection
- Signalized Intersection
- Unsignalized Intersection
- Lane Geometry
- Prot Protected Left
- F Free Right Turn

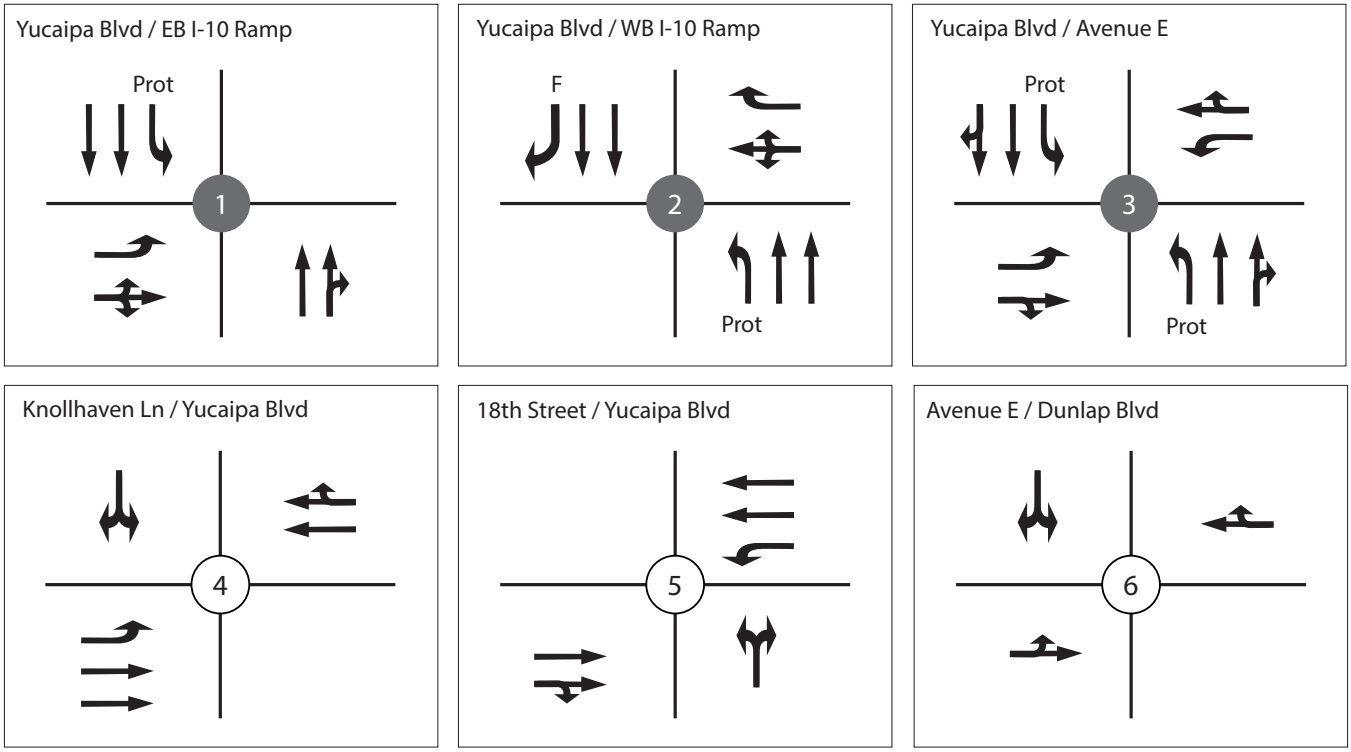

# Figure 4 - Existing (Year 2018) AM and PM Peak Hour Traffic Volumes

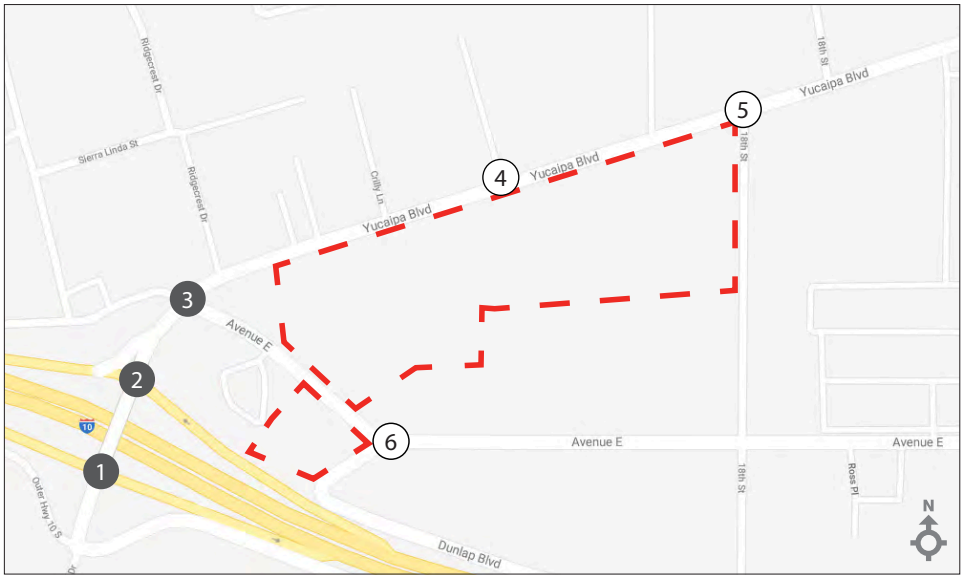


Legend

- Project Area
- # Study Intersection
- Signalized Intersection
- Unsignalized Intersection
- XX/YY AM/PM Volumes

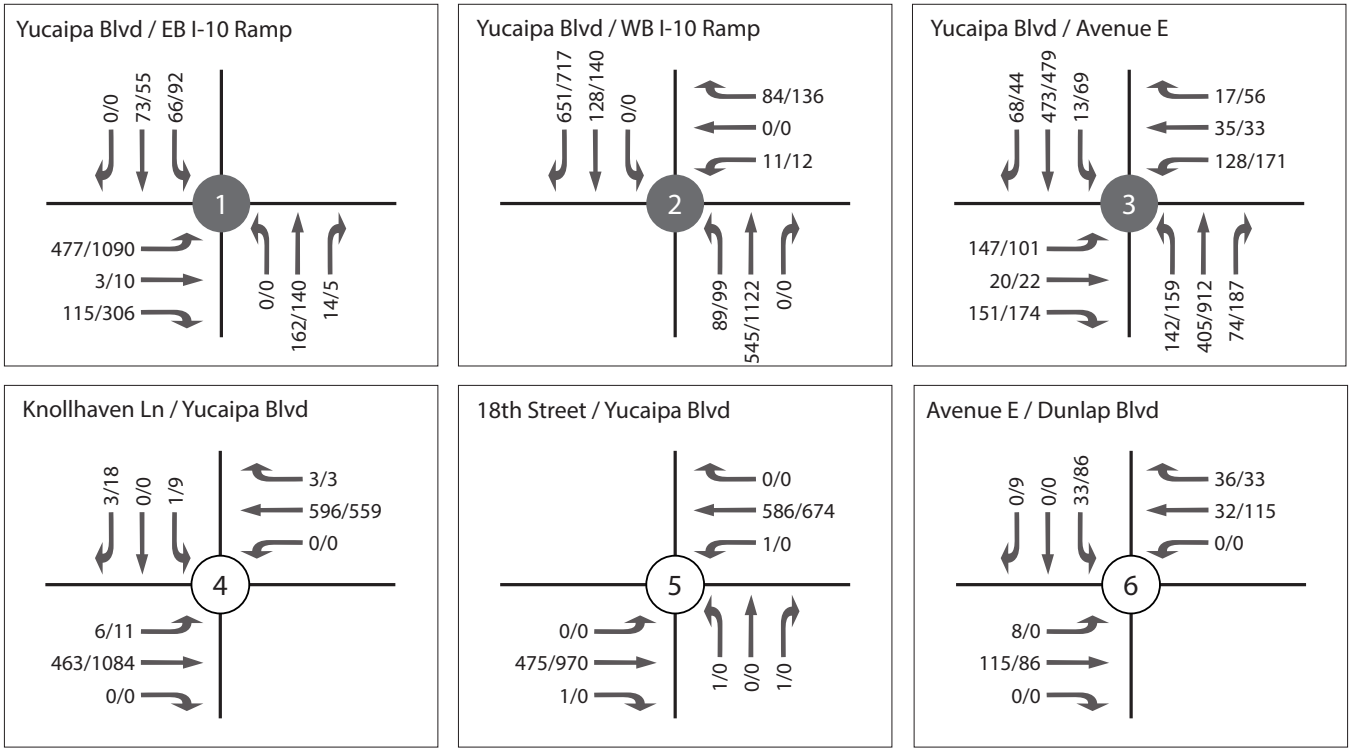

## 3.4 Existing Intersection LOS

A level of service analysis was conducted to evaluate existing intersection operations during the weekday AM and PM peak hours. Table 4 summarizes the existing levels of service at the study area intersections. Existing level of service calculation worksheets are included in Appendix B.

**TABLE 4: Existing Intersection LOS**

| Signalized Intersections | | Control | AM Peak Hour | | PM Peak Hour | |
|---|---|---|---|---|---|---|
| | | | Delay | LOS | Delay | LOS |
| 1 | Yucaipa Blvd and I-10 EB [1] | Signal | 12.4 | B | 18.0 | B |
| 2 | Yucaipa Blvd and I-10 WB [1] | Signal | 14.9 | B | 14.0 | B |
| 3 | Yucaipa Blvd and Avenue E | Signal | 25.4 | C | 56.4 | **E** |
| **Unsignalized Intersections** | | **Control** | **AM Peak Hour** | | **PM Peak Hour** | |
| | | | **Delay** | **LOS** | **Delay** | **LOS** |
| 4 | Knollhaven Lane and Yucaipa Blvd | TWSC | 11.5 | B | 12.9 | B |
| 5 | 18th Street and Yucaipa Blvd | TWSC | 11.7 | B | 0.0 | A |
| 6 | Avenue E and Dunlap Blvd | TWSC | 9.8 | A | 10.3 | B |

[1] Caltrans Intersection; Bold and shaded = unacceptable LOS

As shown in Table 4, all intersections operate at satisfactory LOS (LOS C or better), with the exception of the following location:

- Yucaipa Blvd and Avenue E – LOS E in the PM peak hour

## 3.5 Existing Roadway Segment LOS

Table 5 provides a summary of the Existing (Year 2018) Conditions roadway segment capacity analysis based on the capacity thresholds identified in Table 3. The City of Yucaipa designates LOS C as its threshold of significance and therefore figures from LOS D have been used as an upper threshold of significance for this study.

**Table 5: Existing Roadway Segment Analysis**

| Segment | | | | Lane Geo | Estimated Daily Capacity | 2018 | V/C Ratio |
|---|---|---|---|---|---|---|---|
| A | Yucaipa Blvd | WB I-10 Ramp | Avenue E | 4D | 34,200 | 23,618 | 0.69 |
| B | Yucaipa Blvd | Avenue E | Knollhaven Lane | 4D | 34,200 | 20,664 | 0.60 |
| C | Yucaipa Blvd | 18th Street | 17th Street | 4D | 34,200 | 19,926 | 0.58 |
| D | Avenue E | Yucaipa Blvd | Dunlap Blvd | 2U | 14,400 | 6,619 | 0.46 |
| E | Dunlap Blvd | S of Avenue E | - | 2U | 14,400 | 1,205 | 0.08 |
| F | Avenue E | Dunlap Blvd | 18th Street | 2U | 14,400 | 2,239 | 0.16 |
| G | Avenue E | 18th Street | 17th Street | 2U | 14,400 | 2,267 | 0.16 |

As indicated in section 2.8, the roadway segment analysis is used as a planning tool to evaluate the adequacy of existing roadway segment capacities. A v/c ratio of greater than 1.01 to 1.25 suggest that additional review is required; however, if adjacent intersections provide the lanes needed to achieve acceptable peak hour LOS, then segment capacity improvements between key intersections may not be needed. For roadway segments significantly exceeding capacity (v/c ratios > 1.25) then additional through

lane roadway capacity and intersection improvements are more likely to be needed. All roadway segments are currently operating at an acceptable LOS under Existing (Year 2018) No Project Conditions.

## 3.6 Existing Freeway Mainline LOS

Table 6 summarizes the existing freeway mainline LOS at the study area mainline segments. The freeway mainline analysis worksheets are contained in Appendix C.

**Table 6: Existing Freeway Mainline Analysis**

| Mainline Segment ID | Mainline Segment | AADT[1] | Density[2] | LOS |
|---|---|---|---|---|
| H | I-10 South of Yucaipa Boulevard | 123,000 | 18.2 | C |
| I | I-10 North of Yucaipa Boulevard | 151,000 | 22.8 | C |

[1] Volumes referenced from Caltrans' Traffic Data Branch (2017)
[2] Density reported as pc/mi/ln

Both freeway segments are currently operating at acceptable level of service under Existing (Year 2018) No Project Conditions.

# 4. Future Traffic Volume Development

## 4.1 Future Traffic Volumes

The future background traffic is composed of existing traffic (based on the count data), background ambient traffic growth per year, and traffic from planned developments (i.e. cumulative projects). The analysis of cumulative conditions is required by the SANBAG Congestion Management Program. Traffic from all cumulative projects (anticipated to be completed by each analysis scenario) plus the annual ambient growth rate is added to baseline existing traffic volumes to forecast Future (Year 2020) Conditions.

### 4.1.1 Ambient Traffic Growth

All future scenario traffic volumes were developed by applying a linear 1.5 percent annual growth rate to the Existing (2018) traffic volumes. Use of an annual growth rate to account for area-wide growth is common to both current and previous traffic studies within the City and County and has been approved by the City for use on this project.

### 4.1.2 Cumulative Projects

California Environmental Quality Act (CEQA) requires that other reasonably foreseeable development projects which are either approved or being processed concurrently in the study area also be included as part of a cumulative analysis scenario. A cumulative project list provided by the City comprised of two (2) projects was developed for the purposes of this analysis. Below is a brief description of the cumulative projects included as part of the Future (Year 2020) analysis:

- Lakritz Apartment Homes (APN 0300-191-32): 19-unit apartment home complex
- Tract 18174 (APN 0301-061-03, 0301-072-13, and 0301-072-17): 70-unit condominium project

The location of each related project is shown in Figure 5.

# Figure 5 - Cumulative Project Locations

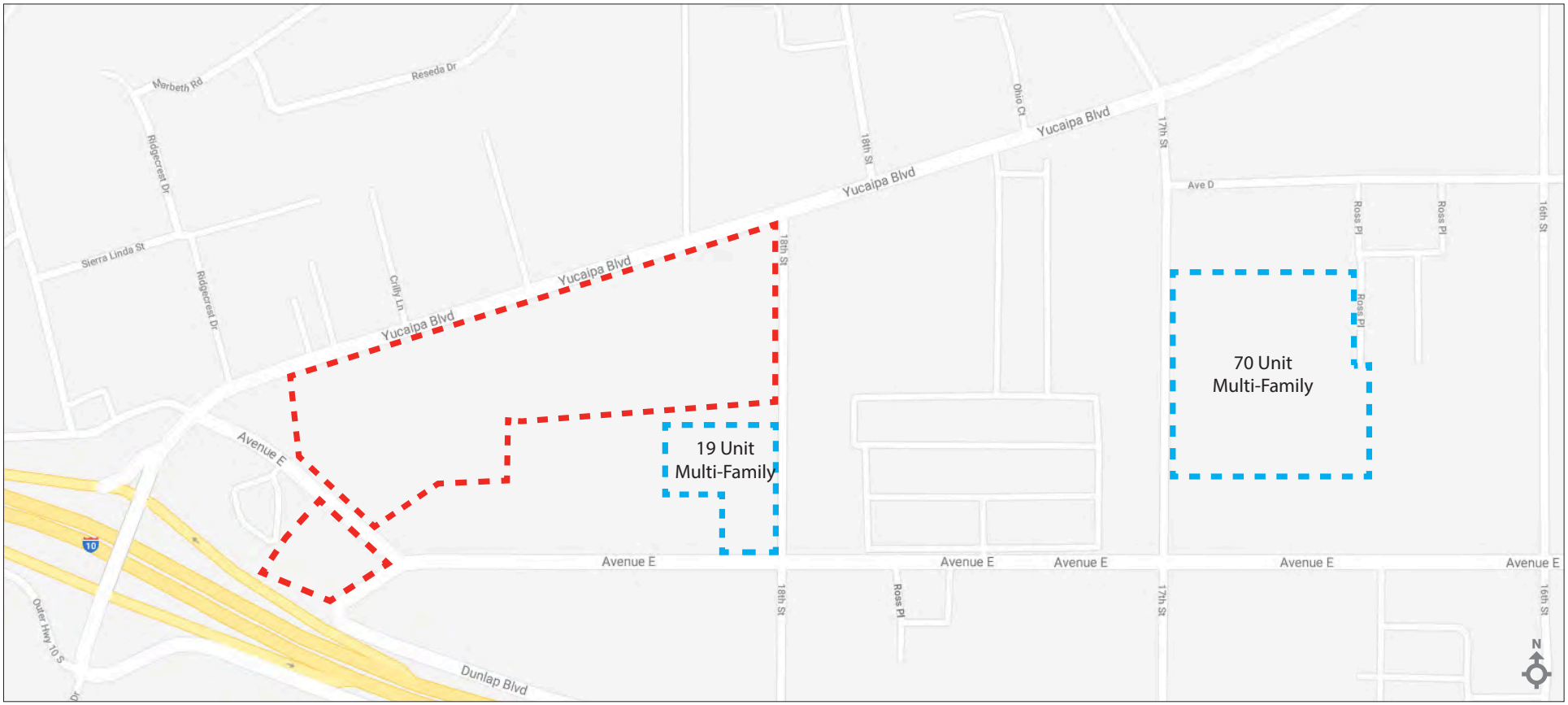


Legend

Project Area

# 5. Future (Year 2020) No Project

The proposed project is scheduled to be operational by the Year 2020. This section develops the future baseline 2020 conditions in the study area. The future condition network is based on lane improvements and upgrades detailed by the City of Yucaipa and through project design features. Phase I of the Yucaipa Boulevard Widening Project to six lanes between 18th Street and I-10 will be completed by summer 2019 and is therefore reflected in the projected LOS. The existing unsignalized intersection of Knollhaven Place and Yucaipa Boulevard will be converted to a signalized intersection as a project design feature. Figure 6 illustrates the Future (Year 2020) intersection geometry and traffic control.

## 5.1 Future (Year 2020) Traffic Control and Traffic Volumes

The Future (Year 2020) background traffic is composed of existing traffic (based on count data collected in 2018), background ambient traffic growth per year (identified as 1.5 percent per year for a total of 3 percent over 2 years), and traffic from the cumulative projects listed in Section 4.1.2. The AM and PM peak hour study intersection volumes for the Future (Year 2020) is shown in Figure 7.

## 5.2 Future (Year 2020) Level of Service (LOS)

A summary of the intersection level of service analysis results for the Future (Year 2020) No Project Condition is included in Table 7.

**Table 7: Future (Year 2020) No Project – Intersection LOS**

| Signalized Intersections | | Control | AM Peak Hour | | PM Peak Hour | |
|---|---|---|---|---|---|---|
| | | | Delay | LOS | Delay | LOS |
| 1 | Yucaipa Blvd and I-10 EB [1] | Signal | 13.0 | B | 19.1 | B |
| 2 | Yucaipa Blvd and I-10 WB [1] | Signal | 14.8 | B | 14.0 | B |
| 3 | Yucaipa Blvd and Avenue E | Signal | 24.2 | C | 65.8 | **E** |
| **Unsignalized Intersections** | | **Control** | **AM Peak Hour** | | **PM Peak Hour** | |
| | | | **Delay** | **LOS** | **Delay** | **LOS** |
| 4 | Knollhaven Lane and Yucaipa Blvd | TWSC | 12.5 | B | 15.2 | C |
| 5 | 18th Street and Yucaipa Blvd | TWSC | 12.7 | B | 18.9 | C |
| 6 | Avenue E and Dunlap Blvd | Roundabout | 4.2 | A | 4.6 | A |

[1] Caltrans Intersection; Bold and shaded = unacceptable LOS

As shown in Table 7, all intersections are forecast to operate at satisfactory LOS (LOS C or better), with the exception of the following location:

- Yucaipa Blvd and Avenue E – LOS E in the PM peak hour

# Figure 6 - Study Area Intersection Lane Geometry and Future 2020 Control

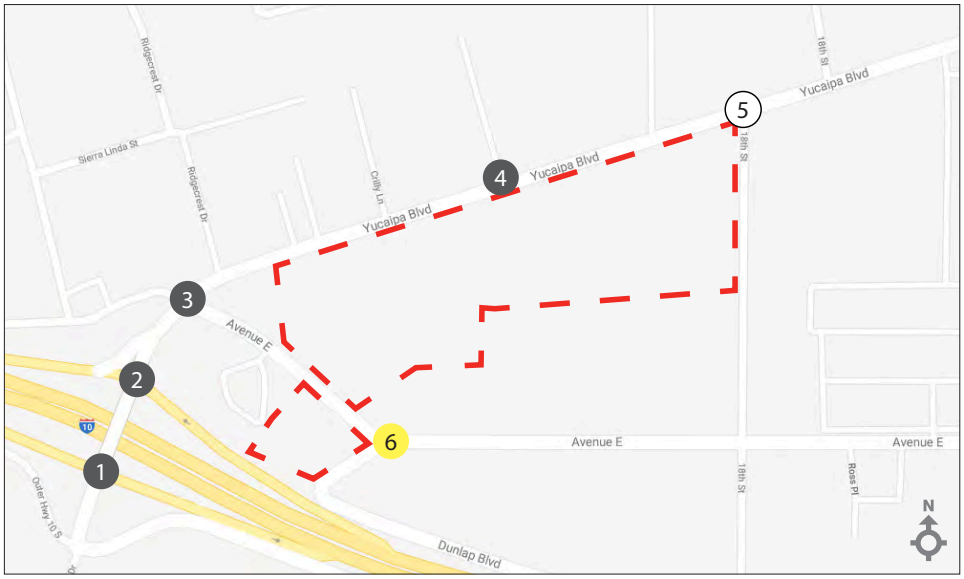


Legend

- Project Area
- # Study Intersection
- Signalized Intersection
- Unsignalized Intersection
- Proposed Roundabout
- Lane Geometry
- Prot Protected Left
- F Free Right Turn

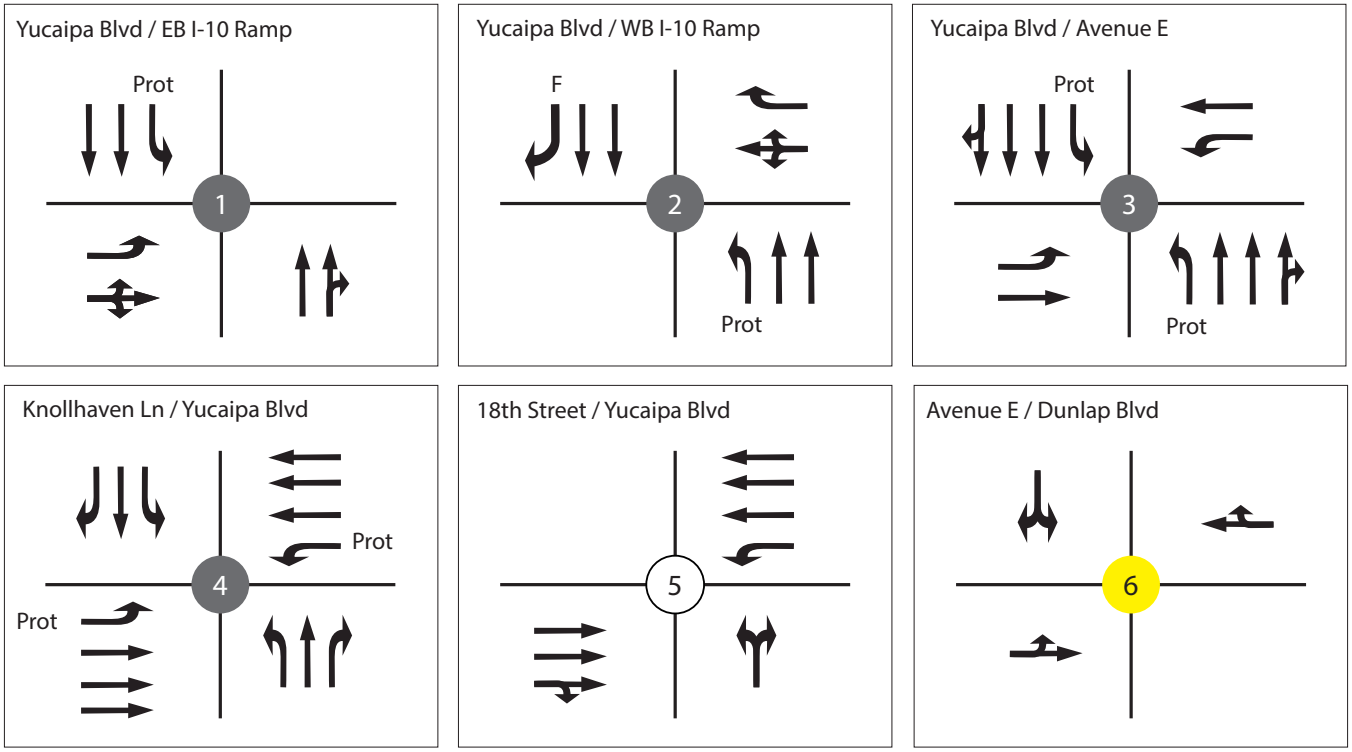

# Figure 7 - Future (Year 2020) No Project AM and PM Peak Hour Traffic Volumes

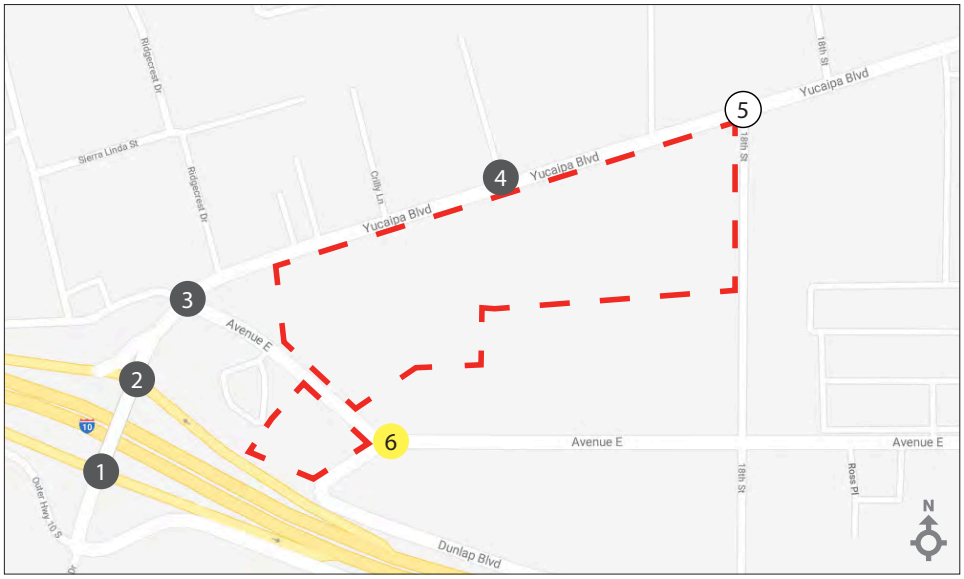


Legend

- Project Area
- # Study Intersection
- Signalized Intersection
- Unsignalized Intersection
- Proposed Roundabout
- XX/YY AM/PM Volumes

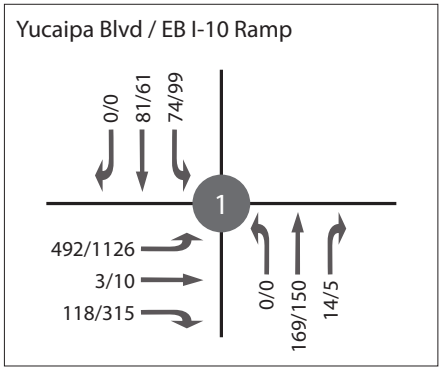


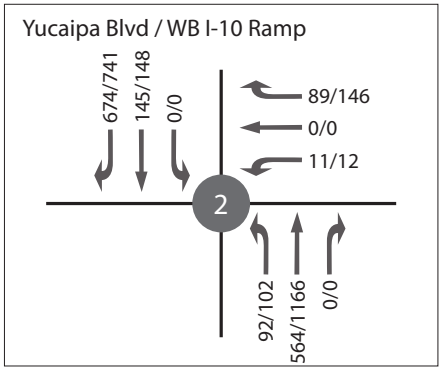


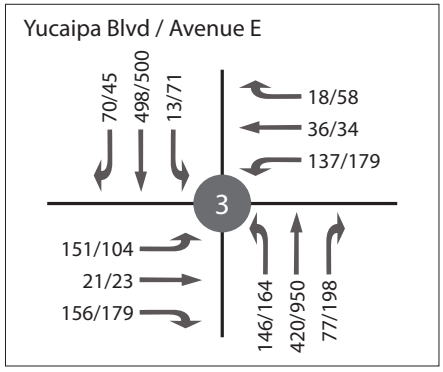


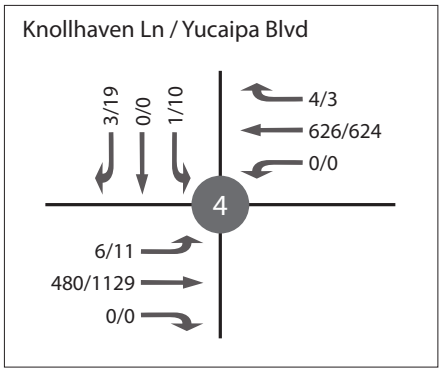


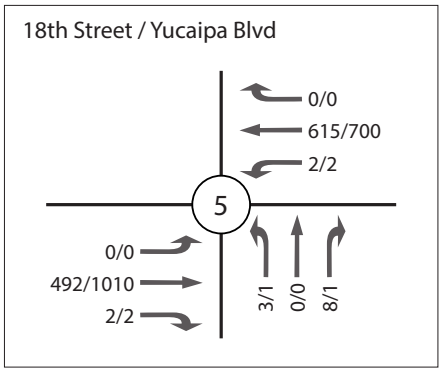


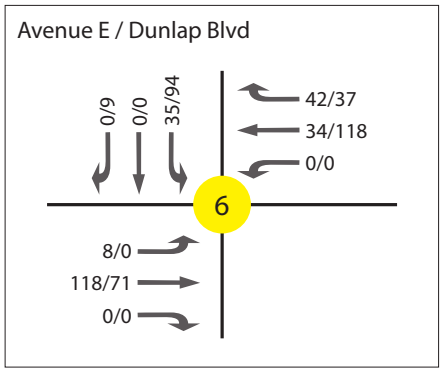

## 5.3 Future (Year 2020) Roadway Segment LOS

Table 8 provides a summary of the Future (Year 2018) Conditions roadway segment capacity analysis based on the capacity thresholds identified in Table 3.

**Table 8: Future (Year 2020) No Project Roadway Segment Analysis**

| Segment | | | | Lanes | Estimated Daily Capacity | 2018 | V/C Ratio |
|---|---|---|---|---|---|---|---|
| A | Yucaipa Blvd | WB I-10 Ramp | Avenue E | 5D | 43,650 | 24,327 | 0.56 |
| B | Yucaipa Blvd | Avenue E | Knollhaven Lane | 6D | 53,100 | 21,284 | 0.40 |
| C | Yucaipa Blvd | 18th Street | 17th Street | 6D | 53,100 | 20,524 | 0.39 |
| D | Avenue E | Yucaipa Blvd | Dunlap Blvd | 2U | 14,400 | 6,818 | 0.47 |
| E | Dunlap Blvd | S of Avenue E | - | 2U | 14,400 | 1,241 | 0.09 |
| F | Avenue E | Dunlap Blvd | 18th Street | 2U | 14,400 | 2,306 | 0.16 |
| G | Avenue E | 18th Street | 17th Street | 2U | 14,400 | 2,335 | 0.16 |

All roadway segments are forecast to operate at an acceptable LOS under Future (Year 2020) No Project Conditions.

## 5.4 Future (Year 2020) Freeway Mainline LOS

Table 9 summarizes the existing freeway mainline LOS at the study area mainline segments. The freeway mainline analysis worksheets are contained in Appendix C.

**Table 9: Future (Year 2020) Freeway Mainline Analysis**

| Mainline Segment ID | Mainline Segment | AADT[1] | Density[2] | LOS |
|---|---|---|---|---|
| H | I-10 South of Yucaipa Boulevard | 126,690 | 18.8 | C |
| I | I-10 North of Yucaipa Boulevard | 155,530 | 23.7 | C |

[1] Volumes referenced from Caltrans' Traffic Data Branch (2017)
[2] Density reported as pc/mi/ln

Both freeway segments are anticipated to operate at acceptable level of service under Future (Year 2020) No Project Conditions.

# 6. Proposed Project

## 6.1 Project Description

VantageOne Real Estate Investments is proposing to build a commercial retail and service development known as Yucaipa Pointe, located south of Yucaipa Boulevard, between Avenue E and 18th Street. The project proposes approximately 137,000 SF shopping center to house restaurants, fast food establishments, shops, a movie theater, a health club and a car wash. The following presents the project components:

- Health Club
- Theater
- Restaurants
- Fast-Food Restaurants
- Car Wash
- Retail

Two access locations to the shopping center are proposed along Yucaipa Boulevard: primary access to will be provided via a new traffic signal at Knollhaven Lane/Yucaipa Boulevard. A right-turn in/out driveway will be provided on Yucaipa Boulevard between Avenue E and Knollhaven Lane. Three secondary access driveways on the west boundary of the project area will be provided on Avenue E between Yucaipa Boulevard and Dunlap Boulevard and another two driveways on the east side of the project on 18th Street between Yucaipa Boulevard and Avenue E.

## 6.2 Trip Generation

Trip generation for the proposed project was calculated using rates from the latest Institute of Transportation Engineers Trip Generation Manual (10th Edition) for Land Use Codes 492 (Health Club), 444 (Movie Theater), 932 (High-Turnover Sit Down Restaurant), 930 (Fast Casual Restaurant), 934 (Fast-Food with Drive Through Window), 948 (Automated Car Wash), and 826 (Specialty Retail). Table 10 below presents the resultant AM and PM peak hour trip generation for the proposed project.

## 6.3 Trip Distribution and Assignment

According to the site plan, the proposed project will utilize two entrances on Yucaipa Boulevard between Avenue E and 18th Street, three driveways on Avenue E between Yucaipa Boulevard and Dunlap Boulevard, and two driveways on 18th Street between Yucaipa Boulevard and Avenue E. Locally, trips were assigned to and from the project site based on the location of these access points. Regional trip distribution has been estimated based on the anticipated trade area, which defines the capture area for the project. The trip distribution percentages are presented in Figure 8, with the resulting AM and PM peak hour trip assignment depicted in Figure 9.

**Table 10: Project Trip Generation**

| | | | A.M. Peak Hour | | | P.M. Peak Hour | | |
|---|---|---|---|---|---|---|---|---|
| | Unit | ADT[2] | In | Out | Total | In | Out | Total |
| **Trip Rates[1] (Land Use Code)** | | | | | | | | |
| Health Club (492) | TSF | 32.93 | 0.67 | 0.64 | 1.31 | 1.97 | 1.48 | 3.45 |
| Movie Theater (444) | TSF | 78.09 | 0.11 | 0.11 | 0.22 | 5.80 | 0.37 | 6.17 |
| High-Turnover (Sit-Down) Restaurant (932) | TSF | 112.18 | 5.47 | 4.47 | 9.94 | 6.06 | 3.71 | 9.77 |
| Fast Casual Restaurant (930) | TSF | 315.17 | 1.39 | 0.68 | 2.07 | 7.77 | 6.36 | 14.13 |
| Fast-Food Restaurant with Drive-Through Window (934) | TSF | 496.12 | 23.16 | 22.26 | 45.42 | 16.98 | 15.67 | 32.65 |
| Automated Car Wash (948) | TSF | 30.40 | - | - | - | 7.10 | 7.10 | 14.20 |
| Specialty Retail (826) | TSF | 44.32 | - | - | - | 1.19 | 1.52 | 2.71 |
| **Project Trip Generation** | **Size** | | | | | | | |
| Area A | | | | | | | | |
| Major 1 - Health Club | 34.000 | 1,120 | 23 | 22 | 45 | 67 | 50 | 117 |
| Major 2 - Movie Theater with Matinee | 39.000 | 3,046 | 4 | 4 | 9 | 226 | 14 | 241 |
| Pad 1 - High-Turnover (Sit-Down) Restaurant | 5.800 | 651 | 32 | 26 | 58 | 35 | 22 | 57 |
| Pad 2 - Fast-Food Restaurant with Drive-Through Window | 6.065 | 3,009 | 140 | 135 | 275 | 103 | 95 | 198 |
| Pad 3 - Fast-Food Restaurant with Drive-Through Window | 3.000 | 1,488 | 69 | 67 | 136 | 51 | 47 | 98 |
| Pad 4 - Fast-Food Restaurant with Drive-Through Window | 3.500 | 1,736 | 81 | 78 | 159 | 59 | 55 | 114 |
| Pad 5 - Fast-Food Restaurant with Drive-Through Window | 4.300 | 2,133 | 100 | 96 | 195 | 73 | 67 | 140 |
| Pad 5 - Fast Casual Restaurant | 2.800 | 882 | 4 | 2 | 6 | 22 | 18 | 40 |
| Pad 6 - Fast-Food Restaurant with Drive-Through Window | 4.800 | 2,381 | 111 | 107 | 218 | 81 | 75 | 157 |
| Pad 7 - Automated Car Wash | 3.779 | 115 | 0 | 0 | 0 | 27 | 27 | 54 |
| Shops 1 - Fast Casual Restaurant | 7.100 | 2,238 | 10 | 5 | 15 | 55 | 45 | 100 |
| Shops 1 - Fast-Food Restaurant with Drive-Through Window | 2.000 | 992 | 46 | 45 | 91 | 34 | 31 | 65 |
| Pad 8 - High-Turnover (Sit-Down) Restaurant | 8.400 | 942 | 46 | 38 | 83 | 51 | 31 | 82 |
| Pad 9 - High-Turnover (Sit-Down) Restaurant | 5.000 | 561 | 27 | 22 | 50 | 30 | 19 | 49 |
| Area C | | | | | | | | |
| Pad 7 - Fast-Food Restaurant with Drive-Through Window | 5.000 | 2,481 | 116 | 111 | 227 | 85 | 78 | 163 |
| Shops 2 - Fast Casual Restaurant | 1.000 | 315 | 1 | 1 | 2 | 8 | 6 | 14 |
| Shops 2 - Specialty Retail | 2.000 | 89 | 0 | 0 | 0 | 2 | 3 | 5 |
| ***Total Project Trip Generation*** | | ***24,179*** | ***811*** | ***757*** | ***1,568*** | ***1,010*** | ***685*** | ***1,695*** |

Notes: TSF - thousand square feet

[1]Trip rates referenced from the Institute of Transportation Engineers (ITE) Trip Generation, 10th Edition

As shown in Table 10, the proposed project is anticipated to generate approximately 24,179 daily trips, 1,568 AM peak hour trips (811 inbound and 757 outbound), and 1,695 PM peak hour trips (1,010 inbound and 685 outbound).

# Figure 8 - Project Trip Distribution

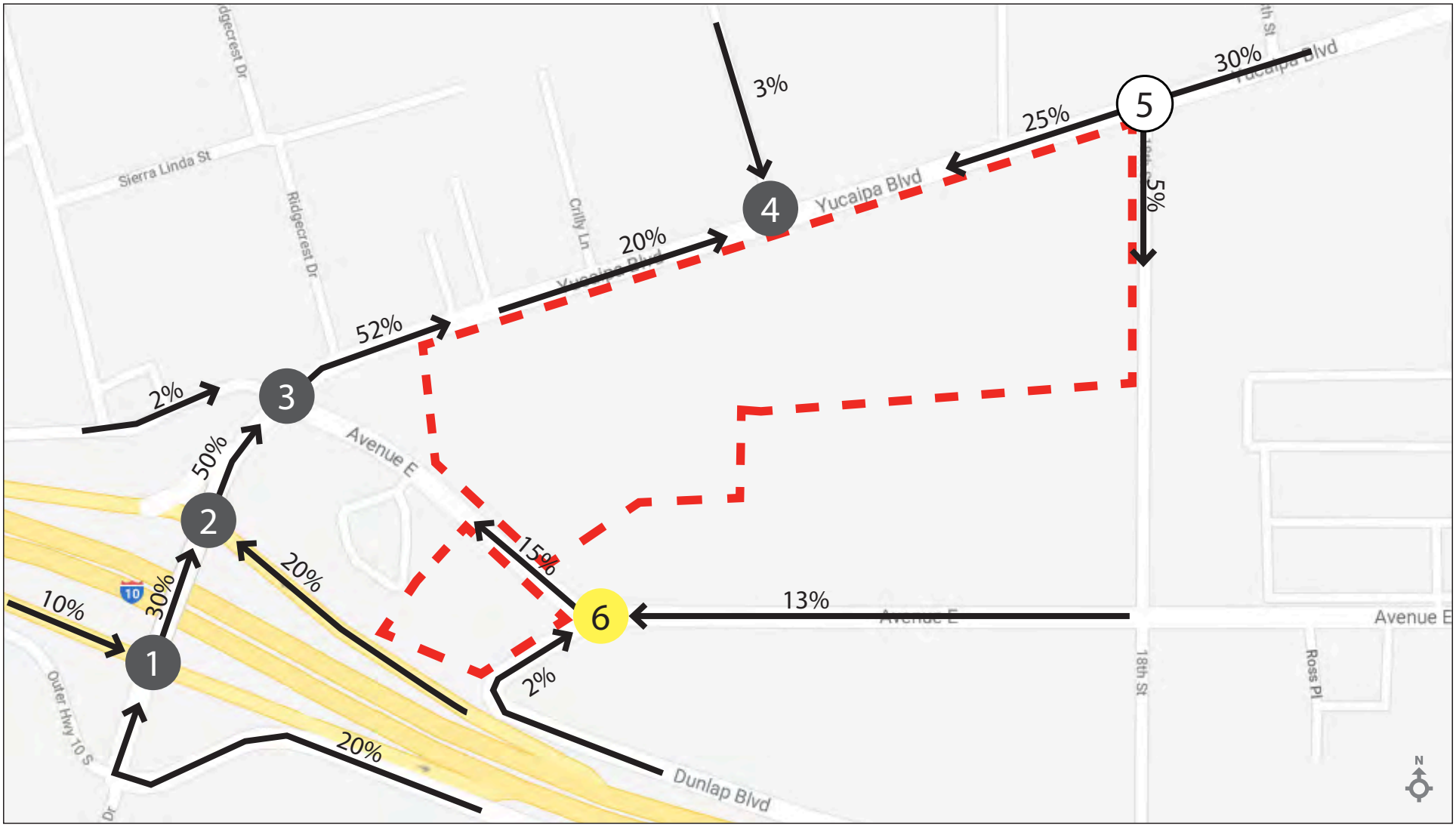


Legend

- Project Area
- Study Intersection
- Signalized Intersection
- Unsignalized Intersection
- Proposed Roundabout
- Trip Distribution Percentage

# Figure 9 - Project Trip Assignment AM and PM Peak Hour Traffic Volumes

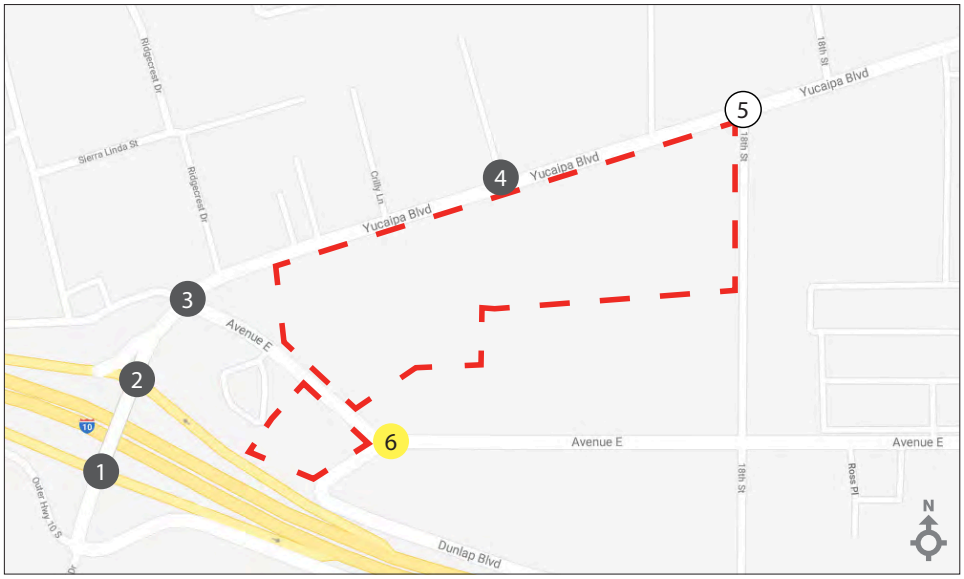


Legend

- Project Area
- Study Intersection
- Signalized Intersection
- Unsignalized Intersection
- Proposed Roundabout
- Lane Geometry

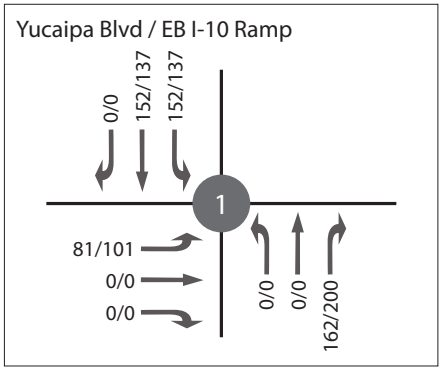


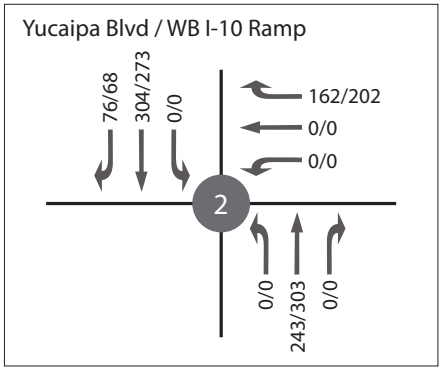


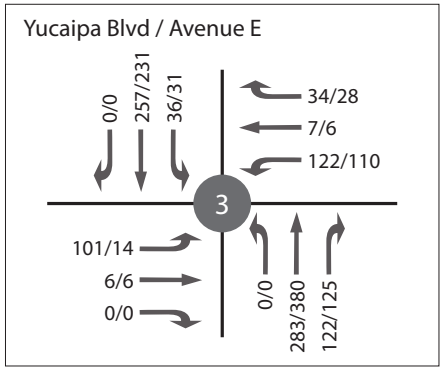


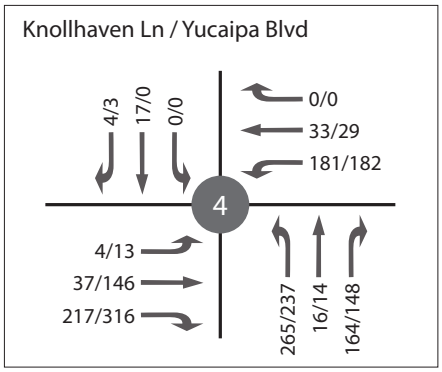


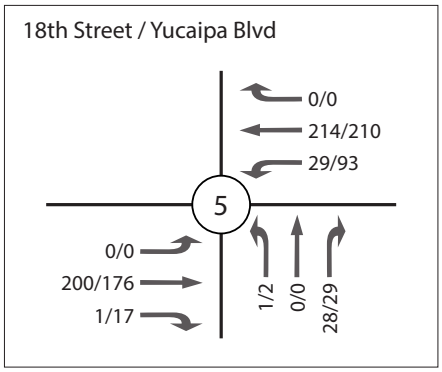


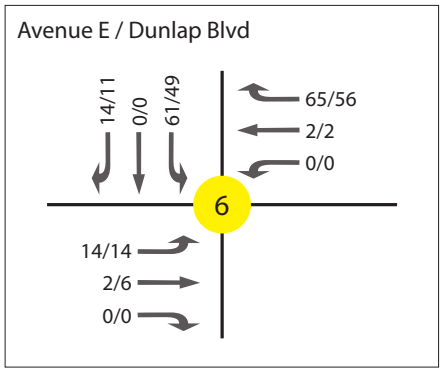

# 7. Project Impact Analysis

This section evaluates the potential impacts of the proposed project on the study area intersections.

## 7.1 Existing (Year 2018) With Project Impact Analysis

In an effort to satisfy the CEQA Guideline section 15125(a), an analysis of existing traffic volumes plus traffic generated by the proposed project has been included.

### 7.1.1 Existing (Year 2018) With Project Intersection LOS

A level of service analysis was conducted to evaluate addition of project traffic to the Existing (Year 2018) intersection operating conditions during the weekday AM and PM peak hours. In order to determine any direct project impacts, traffic from the project was added to existing traffic volumes. All study area intersection lane configurations are assumed to remain unchanged from Existing Conditions, with the exception of Knollhaven Lane and Yucaipa Boulevard, assumed to be a traffic signal, and Avenue E and Dunlap Blvd which has been modelled in three separate alternatives: Roundabout, Two-Way Stop Control, and All-Way Stop Control. Figure 10 illustrates the AM and PM peak hour volumes at the area intersections under Existing (2018) With Project conditions. Table 11 summarizes the Existing (2018) With Project level of service at the study area intersections. Level of service calculation worksheets are included in Appendix B.

**Table 11: Existing (Year 2018) With Project AM/PM Peak Hour – Intersection LOS**

| Signalized Intersections | | Control | AM Peak Hour | | PM Peak Hour | | Impact? (Y/N) |
|---|---|---|---|---|---|---|---|
| | | | Delay | LOS | Delay | LOS | |
| 1 | Yucaipa Blvd and I-10 EB [1] | Signal | 19.1 | B | 48.1 | D | N |
| 2 | Yucaipa Blvd and I-10 WB [1] | Signal | 14.7 | B | 13.8 | B | N |
| 3 | Yucaipa Blvd and Avenue E | Signal | 41.3 | **D** | 159.0 | **F** | Y |
| 4 | Knollhaven Lane and Yucaipa Blvd | Signal | 29.1 | C | 31.0 | C | N |
| **Unsignalized Intersections** | | **Control** | **AM Peak Hour** | | **PM Peak Hour** | | **Impact? (Y/N)** |
| | | | **Delay** | **LOS** | **Delay** | **LOS** | |
| 5 | 18th Street and Yucaipa Blvd | TWSC | 11.5 | B | 15.7 | C | N |
| 6 | Avenue E and Dunlap Blvd | Roundabout | 4.6 | A | 5.1 | A | N |
| 6A | Avenue E and Dunlap Blvd | TWSC | 10.8 | B | 11.6 | B | N |
| 6B | Avenue E and Dunlap Blvd | AWSC | 8.2 | A | 8.8 | A | N |

[1] Caltrans Intersection; Bold and shaded = unacceptable LOS

As shown in Table 11, all intersections operate at satisfactory LOS (LOS C or better), with the exception of the following location, which is considered an Existing (Year 2018) With Project impact:

- Yucaipa Blvd and Avenue E – LOS D in the AM peak hour and LOS F in the PM peak hour

At Avenue E and Dunlap Boulevard, the intersection is forecast to operate satisfactorily under any of the three potential traffic controls. The Caltrans California Manual on Uniform Traffic Control Devices (CA MUTCD) does not have specific warrant criteria for roundabouts. Implementation of any of the three traffic controls at this location would result in acceptable LOS. However, with safety and geometric considerations, implementation of either a roundabout or an all-way stop control are recommended.

# Figure 10 - Existing (Year 2018) With Project AM and PM Peak Hour Traffic Volumes

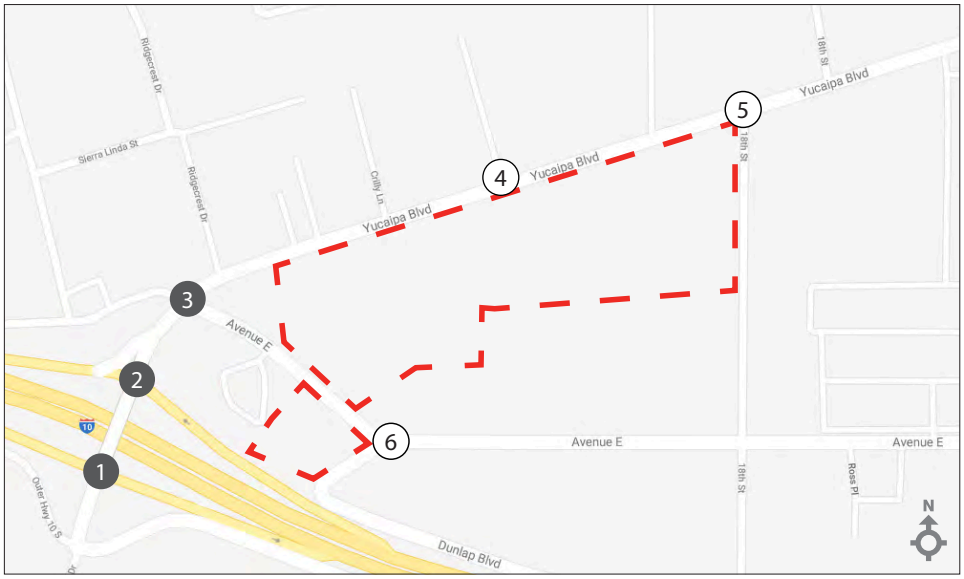


Legend

- Project Area
- # Study Intersection
- Signalized Intersection
- Unsignalized Intersection
- XX/YY AM/PM Volumes

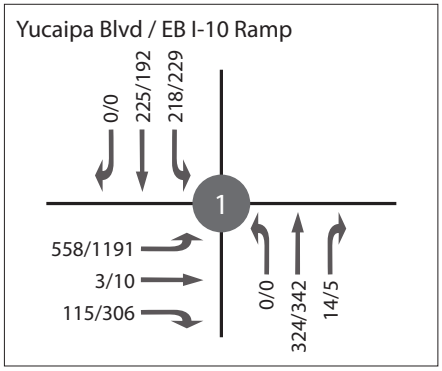


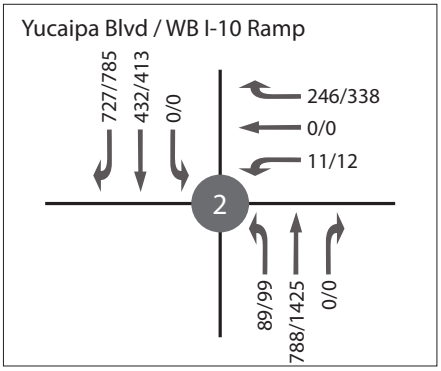


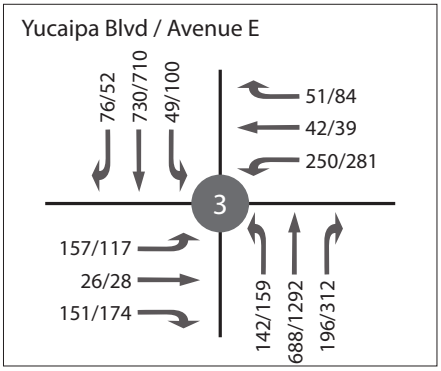


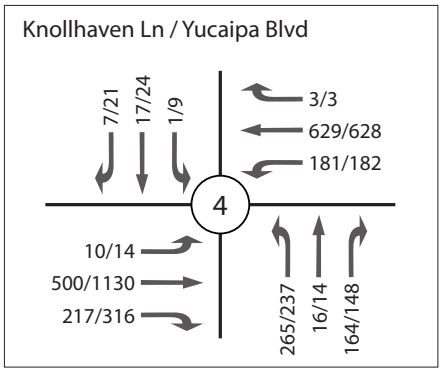


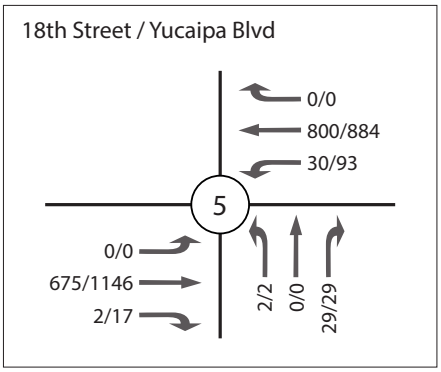


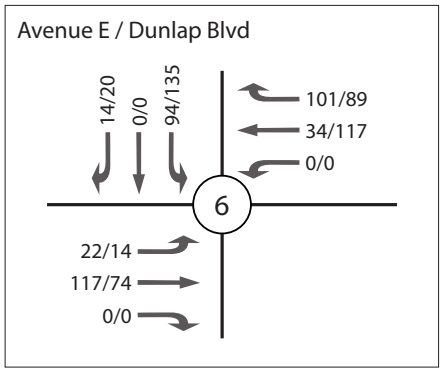

### 7.1.2 Existing (Year 2018) With Project Roadway Segment LOS

A level of service analysis was conducted to evaluate addition of daily project traffic to the Existing (Year 2018) volumes on study area roadway segments. Table 12 summarizes the level of service for roadway segments with addition of project traffic.

**Table 12: Existing (Year 2018) With Project Roadway Segment Analysis**

| Segment | | | | Lane Geo | Estimated Daily Capacity | 2018 | V/C Ratio |
|---|---|---|---|---|---|---|---|
| A | Yucaipa Blvd | WB I-10 Ramp | Avenue E | 4D | 34,200 | 35,736 | 1.04 |
| B | Yucaipa Blvd | Avenue E | Knollhaven Lane | 4D | 34,200 | 29,980 | 0.88 |
| C | Yucaipa Blvd | 18th Street | 17th Street | 4D | 34,200 | 27,198 | 0.80 |
| D | Avenue E | Yucaipa Blvd | Dunlap Blvd | 2U | 14,400 | 10,972 | 0.76 |
| E | Dunlap Blvd | S of Avenue E | - | 2U | 14,400 | 1,689 | 0.12 |
| F | Avenue E | Dunlap Blvd | 18th Street | 2U | 14,400 | 3,935 | 0.27 |
| G | Avenue E | 18th Street | 17th Street | 2U | 14,400 | 5,417 | 0.38 |

All roadway segments are currently operating at an acceptable LOS under Existing (Year 2018) With Project Conditions, with the exception of:

- Segment A: Yucaipa Blvd between WB I-10 Ramps and Avenue E.

### 7.1.3 Existing (Year 2018) With Project Freeway Mainline LOS

A level of service analysis was conducted to evaluate addition of daily project traffic to the Existing (Year 2018) volumes on the study area freeway mainline segments. Table 13 summarizes the level of service for freeway segments with addition of project traffic.

**Table 13: Existing (Year 2018) With Project Freeway Mainline Analysis**

| Mainline Segment ID | Mainline Segment | AADT[1] | Density[2] | LOS |
|---|---|---|---|---|
| H | I-10 South of Yucaipa Boulevard | 125,424 | 18.6 | C |
| I | I-10 North of Yucaipa Boulevard | 155,848 | 23.7 | C |

[1] Volumes referenced from Caltrans' Traffic Data Branch (2017)
[2] Density reported as pc/mi/ln

Both freeway segments would operate at an acceptable level of service under Existing (Year 2018) With Project Conditions.

## 7.2 Future (Year 2020) With Project Impact Analysis

### 7.2.1 Future (Year 2020) With Project Intersection LOS

A level of service analysis was conducted to evaluate addition of project traffic to the Future (Year 2020) intersection operating conditions during the weekday AM and PM peak hours. In order to determine any cumulative project impacts, traffic from the project was added to future no project traffic volumes. All study area intersection lane configurations are shown in Figure 6. Avenue E and Dunlap Blvd has been modelled with three separate alternatives: Roundabout, Two Way Stop Control, and All Way Stop Control. Figure 11 illustrates the AM and PM peak hour volumes at the area intersections under Future (Year 2020) With Project conditions. Table 14 summarizes the Future (Year 2020) With Project level of service at the study area intersections. Level of service calculation worksheets are included in Appendix B.

**Table 14: Future (Year 2020) With Project AM/PM Peak Hour – Intersection LOS**

| Signalized Intersections | | Control | AM Peak Hour | | PM Peak Hour | | Impact? (Y/N) |
|---|---|---|---|---|---|---|---|
| | | | Delay | LOS | Delay | LOS | |
| 1 | Yucaipa Blvd and I-10 EB [1] | Signal | 19.3 | B | 54.8 | D | N |
| 2 | Yucaipa Blvd and I-10 WB [1] | Signal | 14.7 | B | 14.0 | B | N |
| 3 | Yucaipa Blvd and Avenue E | Signal | 38.9 | **D** | 168.5 | **F** | Y |
| 4 | Knollhaven Lane and Yucaipa Blvd | Signal | 22.1 | C | 33.6 | C | N |
| **Unsignalized Intersections** | | **Control** | **AM Peak Hour** | | **PM Peak Hour** | | **Impact? (Y/N)** |
| | | | **Delay** | **LOS** | **Delay** | **LOS** | |
| 5 | 18th Street and Yucaipa Blvd | TWSC | 13.5 | B | 21.6 | C | N |
| 6 | Avenue E and Dunlap Blvd | Roundabout | 4.7 | A | 5.2 | A | N |
| 6A | Avenue E and Dunlap Blvd | TWSC | 10.9 | B | 11.8 | B | N |
| 6B | Avenue E and Dunlap Blvd | AWSC | 8.3 | A | 8.9 | A | N |

[1] Caltrans Intersection; Bold and shaded = unacceptable LOS

As shown in Table 14, all intersections operate at satisfactory LOS (LOS C or better), with the exception of the following location, which is considered a Future (Year 2020) With Project impact:

- Yucaipa Blvd and Avenue E – LOS D in the AM peak hour and LOS F in the PM peak hour

At Avenue E and Dunlap Boulevard, the intersection is forecast to operate satisfactorily under any of the three potential traffic controls. The Caltrans California Manual on Uniform Traffic Control Devices (CA MUTCD) does not have specific warrant criteria for roundabouts. Implementation of any of the three traffic controls at this location would result in acceptable LOS. However, with safety and geometric considerations, implementation of either a roundabout or an all-way stop control are recommended.

# Figure 11 - Future (Year 2020) With Project AM and PM Peak Hour Traffic Volumes

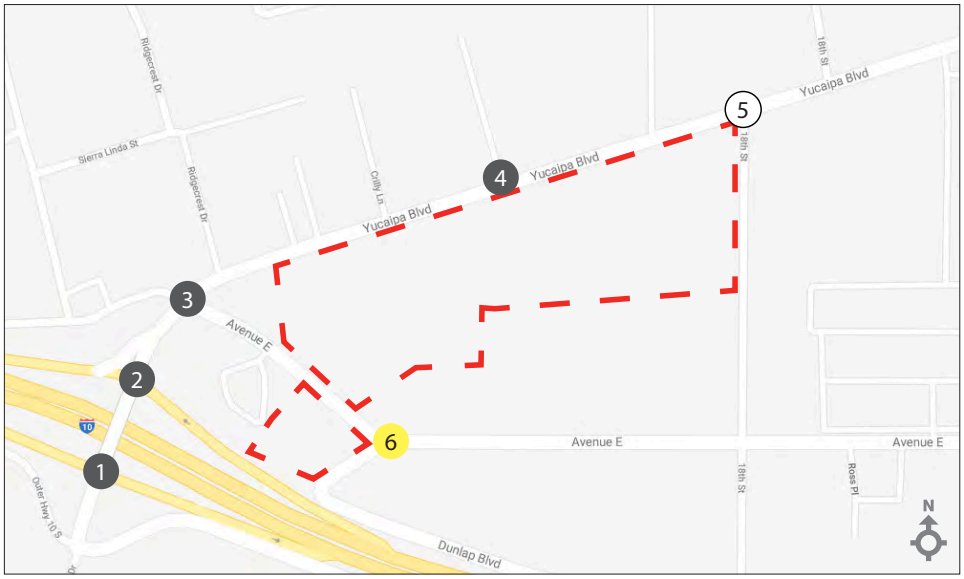


Legend

- Project Area
- # Study Intersection
- Signalized Intersection
- Unsignalized Intersection
- Proposed Roundabout
- XX/YY AM/PM Volumes

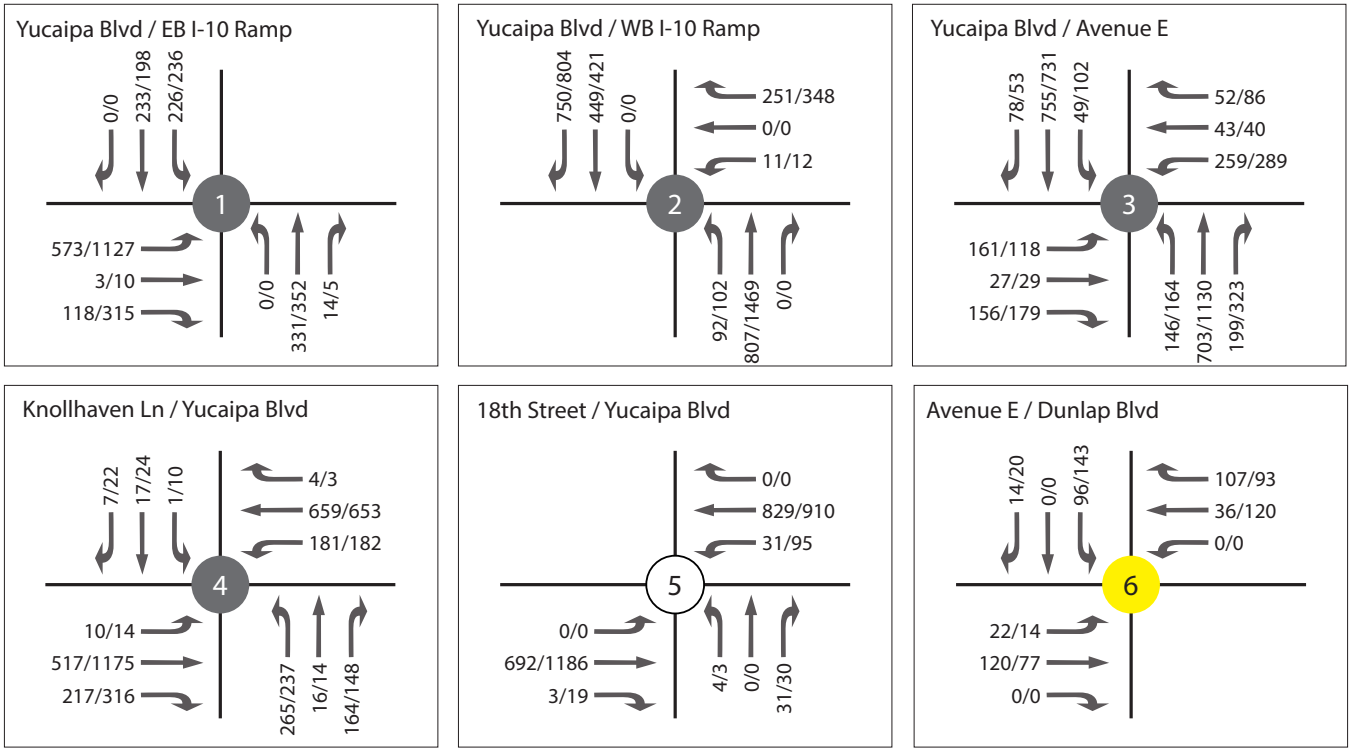

### 7.2.2 Future (Year 2020) With Project Roadway Segment LOS

A level of service analysis was conducted to evaluate addition of daily project traffic to the Future (Year 2020) volumes on study area roadway segments. Table 15 summarizes the level of service for roadway segments with addition of project traffic.

**Table 15: Future (Year 2020) With Project Roadway Segment Analysis**

| Segment | | | | Lane Geo | Estimated Daily Capacity | 2018 | V/C Ratio |
|---|---|---|---|---|---|---|---|
| A | Yucaipa Blvd | WB I-10 Ramp | Avenue E | 5D | 43,650 | 36,445 | 0.83 |
| B | Yucaipa Blvd | Avenue E | Knollhaven Lane | 6D | 53,100 | 30,600 | 0.58 |
| C | Yucaipa Blvd | 18th Street | 17th Street | 6D | 53,100 | 27,796 | 0.52 |
| D | Avenue E | Yucaipa Blvd | Dunlap Blvd | 2U | 14,400 | 11,171 | 0.78 |
| E | Dunlap Blvd | S of Avenue E | - | 2U | 14,400 | 1,725 | 0.12 |
| F | Avenue E | Dunlap Blvd | 18th Street | 2U | 14,400 | 4,002 | 0.28 |
| G | Avenue E | 18th Street | 17th Street | 2U | 14,400 | 5,485 | 0.38 |

All roadway segments are currently operating at an acceptable LOS under Future (Year 2020) With Project Conditions.

### 7.2.3 Future (Year 2020) With Project Freeway Mainline LOS

A level of service analysis was conducted to evaluate addition of daily project traffic to Future (Year 2020) volumes on the study area freeway mainline segments. Table 16 summarizes the level of service for freeway segments with addition of project traffic. Mainline analysis worksheets are provided in Appendix C.

**Table 16: Future (Year 2020) With Project Freeway Mainline Analysis**

| Mainline Segment ID | Mainline Segment | AADT[1] | Density[2] | LOS |
|---|---|---|---|---|
| H | I-10 South of Yucaipa Boulevard | 129,114 | 19.2 | C |
| I | I-10 North of Yucaipa Boulevard | 160,378 | 24.6 | C |

[1] Volumes referenced from Caltrans' Traffic Data Branch (2017)
[2] Density reported as pc/mi/ln

Both freeway segments are forecast to operate at an acceptable level of service under Future (Year 2020) With Project Conditions.

# 8. Site Access and Circulation Analysis

This section evaluates the potential impacts of the proposed project on the driveways in and out of the site. The access locations are as follows:

- A1: Right-in/Right-out Only Driveway on Yucaipa Blvd between Avenue E and Knollhaven Lane
- A2: Full Access Driveway on 18th south of Yucaipa Blvd
- A3: Full Access Driveway on 18th Street between A2 and Avenue E
- A4: Full Access Driveway on Avenue E north of Dunlap Blvd
- A5: Full Access Driveway on Avenue E south of Yucaipa Blvd
- A6: Full Access Driveway on Avenue E between A4 and A5

Figure 12 illustrates the location of each of the proposed access locations.

## 8.1 Project Driveway LOS

A level of service analysis was provided at each of the six (6) proposed project driveways. This does not include the full access driveway at Knollhaven Lane and Yucaipa Blvd which is analyzed in the previous scenarios. Exit approaches were assumed to have one lane, unless specified otherwise. No dedicated left-turn lanes were assumed into any of the project driveways, aside from the full access driveway at Knollhaven Lane.

HCS 10 software was used to evaluate LOS. Table 17 below summarizes the results of the Future (Year 2020) With Project driveway level of service. The LOS worksheets for the driveways are provided in Appendix D.

**Table 17: Project Driveway LOS Analysis**

| Intersection | | Control | AM Peak Hour | | PM Peak Hour | |
|---|---|---|---|---|---|---|
| | | | Delay | LOS | Delay | LOS |
| A1 | Access Driveway and Yucaipa Blvd | TWSC | 10.7 | B | 13.6 | B |
| A2 | Access Driveway and 18th Street | TWSC | 8.9 | A | 9.3 | A |
| A3 | Access Driveway and 18th Street | TWSC | 8.6 | A | 8.6 | A |
| A4 | Access Driveway and Avenue E | TWSC | 9.9 | A | 10.2 | B |
| A5 | Access Driveway and Avenue E | TWSC | 11.1 | B | 11.5 | B |
| A6 | Access Driveway and Avenue E | TWSC | 11.0 | B | 12.4 | B |

As shown in Table 18, all intersections operate at satisfactory LOS (LOS C or better).

## 8.2 Project Driveway Queuing Analysis

In order to fully assess driveway performances, queue lengths for movements at the project ingress and egress locations were considered. HCS 10 software was used to evaluate 95th percentile queues. The purpose of the queuing analysis was to determine the appropriate storage length at each of the driveways. Table 17 below summarizes the results of the Future (Year 2020) With Project driveway level of service. The LOS worksheets for the driveways are provided in Appendix D.

**Table 17: Project Driveway Queuing**

| ID | Peak Hour | Movement | Queue Length (ft.) | Lane Capacity (ft.) | Capacity Exceeded? |
|---|---|---|---|---|---|
| A1 | AM | NB - R | 0.5 | 65 | N |
| | PM | NB - R | 0.8 | 65 | N |
| A2 | AM | NB - L | 1.8 | 330 | N |
| | PM | NB - L | 3.3 | 330 | N |
| | AM | EB - LTR | 4.8 | 300 | N |
| | PM | EB - LTR | 5.5 | 300 | N |
| A3 | AM | NB - L | 0.5 | 300 | N |
| | PM | NB - L | 1.0 | 300 | N |
| | AM | EB - LTR | 0.8 | 210 | N |
| | PM | EB - LTR | 0.8 | 210 | N |
| A4 | AM | SB - L | 0.3 | 270 | N |
| | PM | SB - L | 0.8 | 270 | N |
| | AM | EB - LTR | 1.8 | 180 | N |
| | PM | EB - LTR | 2.3 | 180 | N |
| A5 | AM | SB - L | 3.5 | 390 | N |
| | PM | SB - L | 3.8 | 390 | N |
| | AM | WB - LTR | 14.0 | 75 | N |
| | PM | WB - LTR | 13.3 | 75 | N |
| A6 | AM | NB - L | 1.3 | 60 | N |
| | PM | NB - L | 1.0 | 60 | N |
| | AM | EB - LTR | 14.0 | 30 | N |
| | PM | EB - LTR | 13.3 | 30 | N |
| A7[1] | AM | WB - L | 235 | 200 | Y |
| | PM | WB - L | 237 | 200 | Y |
| | AM | NB - L | 132 | 200 | N |
| | PM | NB - L | 119 | 200 | N |
| | AM | NB - TR | 44 | 120 | N |
| | PM | NB - TR | 42 | 120 | N |

[1]A7 is the full access driveway at Knollhaven Lane and Yucaipa Blvd.

Based on the queuing analysis, the anticipated queue lengths developed by vehicles entering and exiting the driveways would not exceed their respective lane queuing capacity with the exception of:

- WB Left Turn from Yucaipa Blvd into the proposed development at the primary full access driveway (A7)

For the driveways that do not exceed capacity spillover onto to the street network or within the site is not anticipated. Evaluation of the WB Left Turn has shown that the proposed left turn pocket of 200 feet provided by the site plan is not adequate. **It is recommended that the left turn pocket be extended to a minimum of 250 feet to mitigate the queuing effect.**

# Figure 12 - Project Access Points

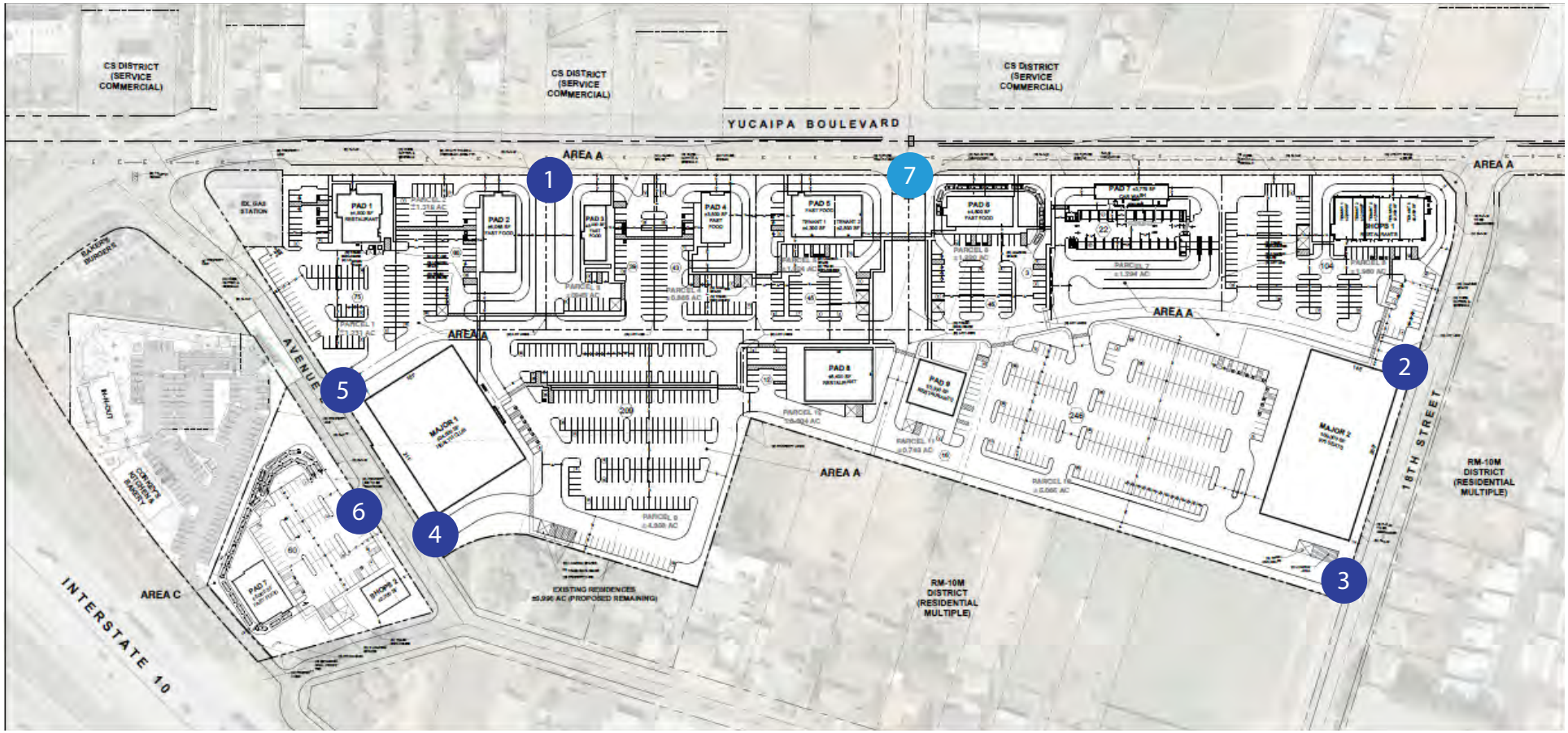


Legend

# Project Entrance

# Full Access Driveway

# 9. Mitigation Measures

The purpose of this section is to provide recommended improvements for the impacted intersections. Improvements for any impacted locations were determined by utilizing the minimum requirements to achieve acceptable LOS. As such, the most cost-effective and simple improvements were considered first, such as restriping of lane configurations, traffic control modifications, and optimization of signal timing. Large-scale improvements, such as installation of a new traffic signal or any lane additions (which may or may not require additional right-of-way), were recommended where necessary to achieve acceptable LOS. Where applicable, mitigation measures identified in the previous studies were utilized.

## 9.1 Existing (Year 2018) With Project Intersection Impacts

As shown in Table 11, one of the six study area intersections would be impacted with implementation of the proposed project under Existing (Year 2018) Conditions. The project would cause the delay at intersections already operating at unacceptable levels to increase or cause intersections operating at acceptable to become unacceptable. The following mitigation measures are recommend to either achieve acceptable LOS or to achieve at least the pre-project LOS.

**TRA-1: Yucaipa Blvd/Avenue E:** Optimization of existing signal timing to provide a longer overall cycle length with additional green time allocated to the westbound left and northbound left turn movements would mitigate the impact at this location.

The LOS with the recommended mitigation measures is presented in Table 18 below. Mitigated LOS worksheets are provided in Appendix E.

**Table 18: Existing (Year 2018) With Project Mitigated LOS**

| Signalized Intersections | | Control | AM Peak Hour | | PM Peak Hour | |
|---|---|---|---|---|---|---|
| | | | Delay | LOS | Delay | LOS |
| 3 | Yucaipa Blvd and Avenue E | Signal | 41.3 | D | 159.0 | F |
| | *With Mitigation TRA-1* | | *20.7* | *C* | *32.8* | *C* |

## 9.2 Existing (Year 2018) With Project Roadway Impacts

As shown on Table 12, the project would cause the roadway segment of Yucaipa Blvd between WB I-10 Ramps and Avenue E (Segment A) to go from acceptable to unacceptable. As indicated in Section 2.7, the roadway segment analysis is used as a planning tool to evaluate the adequacy of existing roadway segment capacities. A v/c ratio of greater than 1.01 to 1.25 suggests that additional review is required; however, if adjacent intersections provide the lanes needed to achieve acceptable peak hour LOS, then segment capacity improvements between key intersections may not be needed. The adjacent intersections were found to operate acceptably with mitigations, as such no mitigations are required for the roadway segments under Existing with Project conditions**.**

## 9.3 Existing (Year 2018) With Project Freeway Impacts

As shown on Table 13, all freeway mainline segments are forecast to operate at acceptable LOS E or better. No mitigations are required for freeway segments under Existing (Year 2018) with Project conditions.

## 9.4 Future (Year 2020) With Project Intersection Impacts

As shown in Table 14, one of the six study area intersections would be impacted with implementation of the proposed project under Future (Year 2020) conditions. The project would cause the delay at intersections already operating at unacceptable levels to increase or cause intersections operating at acceptable to become unacceptable. The following mitigation measures are recommend to either achieve acceptable LOS or to achieve at least the pre-project LOS.

**TRA-1: Yucaipa Blvd/Avenue E:** Optimization of existing signal timing to provide a longer overall cycle length with additional green time allocated to the westbound left and northbound left turn movements would mitigate the impact at this location.

The LOS with the recommended mitigation measures is presented in Table 19 below. Mitigated LOS worksheets are provided in Appendix E.

**Table 19: Future (Year 2020) With Project Mitigated LOS**

| Signalized Intersections | | Control | AM Peak Hour | | PM Peak Hour | |
|---|---|---|---|---|---|---|
| | | | Delay | LOS | Delay | LOS |
| 3 | Yucaipa Blvd and Avenue E | Signal | 38.9 | D | 168.5 | F |
| | *With Mitigation TRA-1* | | *22.1* | *C* | *61.9* | *E* |

Although the PM peak hour operates at unacceptable LOS E, mitigation measure TRA-1 reduces the delay to better than the pre-project conditions. As such, no impact remains after implementation of the mitigation measure.

## 9.5 Future (Year 2020) With Project Roadway Impacts

As shown on Table 15, none of the roadway segments were impacted by implementation of the proposed project.

## 9.6 Future (Year 2020) With Project Freeway Impacts

As shown on Table 16, all freeway mainline segments are forecast to operate at acceptable LOS E or better. No mitigations are required for freeway segments under Future (Year 2020) with Project conditions.

# 10. Conclusion

Based on the results of the level of service analysis, the proposed project can be implemented without significantly impacting any of the study area intersections, roadway segments, or freeway segments with the recommended improvements and mitigation measures.

# Appendix A: Traffic Counts

Counts Unlimited
PO Box 1178
Corona, CA 92878
(951) 268-6268

City of Yucaipa
N/S: Yucaipa Boulevard/Hilltop Drive
E/W: I-10 Eastbound Ramps
Weather: Clear

File Name : 01_YUC_Yucaipa Blvd_Hilltop_10E AM
Site Code : 20218899
Start Date : 12/4/2018
Page No : 1

Groups Printed- Total Volume

| | Yucaipa Boulevard Southbound | | | | I-10 Eastbound On Ramp Westbound | | | | Hilltop Drive Northbound | | | | I-10 Eastbound Off Ramp Eastbound | | | | |
|---|---|---|---|---|---|---|---|---|---|---|---|---|---|---|---|---|---|
| Start Time | Left | Thru | Right | App. Total | Left | Thru | Right | App. Total | Left | Thru | Right | App. Total | Left | Thru | Right | App. Total | Int. Total |
| 07:00 AM | 17 | 12 | 0 | 29 | 0 | 0 | 0 | 0 | 0 | 34 | 2 | 36 | 109 | 0 | 13 | 122 | 187 |
| 07:15 AM | 21 | 13 | 0 | 34 | 0 | 0 | 0 | 0 | 0 | 29 | 4 | 33 | 114 | 1 | 25 | 140 | 207 |
| 07:30 AM | 21 | 13 | 0 | 34 | 0 | 0 | 0 | 0 | 0 | 36 | 2 | 38 | 116 | 0 | 26 | 142 | 214 |
| 07:45 AM | 18 | 16 | 0 | 34 | 0 | 0 | 0 | 0 | 0 | 32 | 4 | 36 | 119 | 0 | 35 | 154 | 224 |
| Total | 77 | 54 | 0 | 131 | 0 | 0 | 0 | 0 | 0 | 131 | 12 | 143 | 458 | 1 | 99 | 558 | 832 |
| 08:00 AM | 20 | 10 | 0 | 30 | 0 | 0 | 0 | 0 | 0 | 55 | 0 | 55 | 113 | 1 | 28 | 142 | 227 |
| 08:15 AM | 15 | 26 | 0 | 41 | 0 | 0 | 0 | 0 | 0 | 37 | 4 | 41 | 123 | 1 | 29 | 153 | 235 |
| 08:30 AM | 13 | 21 | 0 | 34 | 0 | 0 | 0 | 0 | 0 | 38 | 6 | 44 | 122 | 1 | 23 | 146 | 224 |
| 08:45 AM | 17 | 16 | 0 | 33 | 0 | 0 | 0 | 0 | 0 | 36 | 5 | 41 | 121 | 0 | 28 | 149 | 223 |
| Total | 65 | 73 | 0 | 138 | 0 | 0 | 0 | 0 | 0 | 166 | 15 | 181 | 479 | 3 | 108 | 590 | 909 |
| Grand Total | 142 | 127 | 0 | 269 | 0 | 0 | 0 | 0 | 0 | 297 | 27 | 324 | 937 | 4 | 207 | 1148 | 1741 |
| Apprch % | 52.8 | 47.2 | 0 | | 0 | 0 | 0 | | 0 | 91.7 | 8.3 | | 81.6 | 0.3 | 18 | | |
| Total % | 8.2 | 7.3 | 0 | 15.5 | 0 | 0 | 0 | 0 | 0 | 17.1 | 1.6 | 18.6 | 53.8 | 0.2 | 11.9 | 65.9 | |

| | Yucaipa Boulevard Southbound | | | | I-10 Eastbound On Ramp Westbound | | | | Hilltop Drive Northbound | | | | I-10 Eastbound Off Ramp Eastbound | | | | |
|---|---|---|---|---|---|---|---|---|---|---|---|---|---|---|---|---|---|
| Start Time | Left | Thru | Right | App. Total | Left | Thru | Right | App. Total | Left | Thru | Right | App. Total | Left | Thru | Right | App. Total | Int. Total |
| Peak Hour Analysis From 07:00 AM to 08:45 AM - Peak 1 of 1 | | | | | | | | | | | | | | | | | |
| Peak Hour for Entire Intersection Begins at 07:45 AM | | | | | | | | | | | | | | | | | |
| 07:45 AM | 18 | 16 | 0 | 34 | 0 | 0 | 0 | 0 | 0 | 32 | 4 | 36 | 119 | 0 | **35** | **154** | 224 |
| 08:00 AM | **20** | 10 | 0 | 30 | 0 | 0 | 0 | 0 | 0 | **55** | 0 | **55** | 113 | **1** | 28 | 142 | 227 |
| 08:15 AM | 15 | **26** | 0 | **41** | 0 | 0 | 0 | 0 | 0 | 37 | 4 | 41 | **123** | 1 | 29 | 153 | **235** |
| 08:30 AM | 13 | 21 | 0 | 34 | 0 | 0 | 0 | 0 | 0 | 38 | **6** | 44 | 122 | 1 | 23 | 146 | 224 |
| Total Volume | 66 | 73 | 0 | 139 | 0 | 0 | 0 | 0 | 0 | 162 | 14 | 176 | 477 | 3 | 115 | 595 | 910 |
| % App. Total | 47.5 | 52.5 | 0 | | 0 | 0 | 0 | | 0 | 92 | 8 | | 80.2 | 0.5 | 19.3 | | |
| PHF | .825 | .702 | .000 | .848 | .000 | .000 | .000 | .000 | .000 | .736 | .583 | .800 | .970 | .750 | .821 | .966 | .968 |

Counts Unlimited
PO Box 1178
Corona, CA 92878
(951) 268-6268

City of Yucaipa
N/S: Yucaipa Boulevard/Hilltop Drive
E/W: I-10 Eastbound Ramps
Weather: Clear

File Name : 01_YUC_Yucaipa Blvd_Hilltop_10E AM
Site Code : 20218899
Start Date : 12/4/2018
Page No : 2

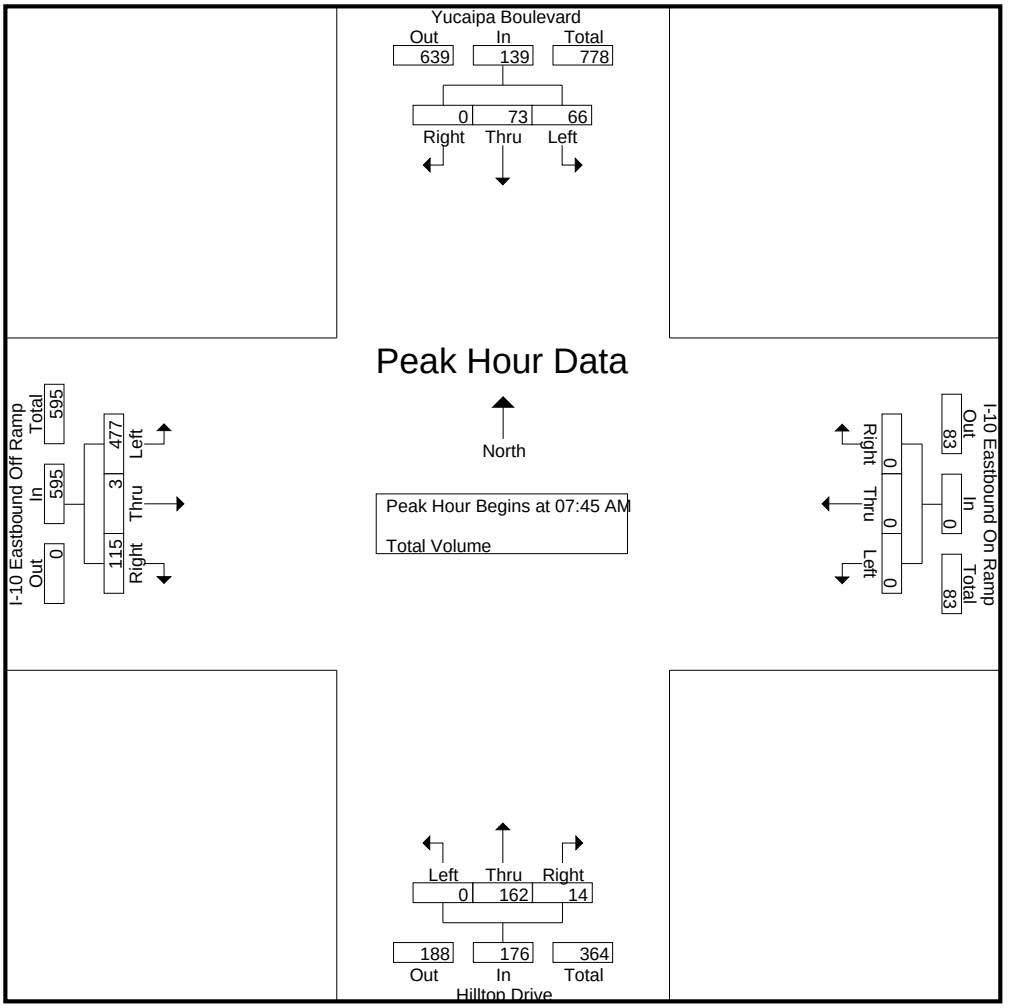


Peak Hour Analysis From 07:00 AM to 08:45 AM - Peak 1 of 1
Peak Hour for Each Approach Begins at:

| | 07:30 AM | | | | 07:00 AM | | | | 08:00 AM | | | | 07:45 AM | | | |
|---|---|---|---|---|---|---|---|---|---|---|---|---|---|---|---|---|
| +0 mins. | **21** | 13 | 0 | 34 | 0 | 0 | 0 | 0 | 0 | **55** | 0 | **55** | 119 | 0 | **35** | **154** |
| +15 mins. | 18 | 16 | 0 | 34 | 0 | 0 | 0 | 0 | 0 | 37 | 4 | 41 | 113 | **1** | 28 | 142 |
| +30 mins. | 20 | 10 | 0 | 30 | 0 | 0 | 0 | 0 | 0 | 38 | **6** | 44 | **123** | 1 | 29 | 153 |
| +45 mins. | 15 | **26** | 0 | **41** | 0 | 0 | 0 | 0 | 0 | 36 | 5 | 41 | 122 | 1 | 23 | 146 |
| Total Volume | 74 | 65 | 0 | 139 | 0 | 0 | 0 | 0 | 0 | 166 | 15 | 181 | 477 | 3 | 115 | 595 |
| % App. Total | 53.2 | 46.8 | 0 | | 0 | 0 | 0 | | 0 | 91.7 | 8.3 | | 80.2 | 0.5 | 19.3 | |
| PHF | .881 | .625 | .000 | .848 | .000 | .000 | .000 | .000 | .000 | .755 | .625 | .823 | .970 | .750 | .821 | .966 |

Counts Unlimited
PO Box 1178
Corona, CA 92878
(951) 268-6268

City of Yucaipa
N/S: Yucaipa Boulevard/Hilltop Drive
E/W: I-10 Eastbound Ramps
Weather: Clear

File Name : 01_YUC_Yucaipa Blvd_Hilltop_10E PM
Site Code : 20218899
Start Date : 12/4/2018
Page No : 1

Groups Printed- Total Volume

| | Yucaipa Boulevard Southbound | | | | I-10 Eastbound On Ramp Westbound | | | | Hilltop Drive Northbound | | | | I-10 Eastbound Off Ramp Eastbound | | | | |
|---|---|---|---|---|---|---|---|---|---|---|---|---|---|---|---|---|---|
| Start Time | Left | Thru | Right | App. Total | Left | Thru | Right | App. Total | Left | Thru | Right | App. Total | Left | Thru | Right | App. Total | Int. Total |
| 04:00 PM | 26 | 16 | 0 | 42 | 0 | 0 | 0 | 0 | 0 | 32 | 2 | 34 | 245 | 1 | 78 | 324 | 400 |
| 04:15 PM | 23 | 23 | 0 | 46 | 0 | 0 | 0 | 0 | 0 | 31 | 1 | 32 | 252 | 1 | 55 | 308 | 386 |
| 04:30 PM | 28 | 10 | 0 | 38 | 0 | 0 | 0 | 0 | 0 | 45 | 1 | 46 | 245 | 1 | 55 | 301 | 385 |
| 04:45 PM | 26 | 14 | 0 | 40 | 0 | 0 | 0 | 0 | 0 | 47 | 2 | 49 | 240 | 3 | 77 | 320 | 409 |
| Total | 103 | 63 | 0 | 166 | 0 | 0 | 0 | 0 | 0 | 155 | 6 | 161 | 982 | 6 | 265 | 1253 | 1580 |
| 05:00 PM | 24 | 11 | 0 | 35 | 0 | 0 | 0 | 0 | 0 | 34 | 0 | 34 | 283 | 2 | 77 | 362 | 431 |
| 05:15 PM | 23 | 14 | 0 | 37 | 0 | 0 | 0 | 0 | 0 | 32 | 2 | 34 | 300 | 5 | 86 | 391 | 462 |
| 05:30 PM | 19 | 16 | 0 | 35 | 0 | 0 | 0 | 0 | 0 | 27 | 1 | 28 | 267 | 0 | 66 | 333 | 396 |
| 05:45 PM | 28 | 14 | 0 | 42 | 0 | 0 | 0 | 0 | 0 | 26 | 1 | 27 | 267 | 0 | 70 | 337 | 406 |
| Total | 94 | 55 | 0 | 149 | 0 | 0 | 0 | 0 | 0 | 119 | 4 | 123 | 1117 | 7 | 299 | 1423 | 1695 |
| Grand Total | 197 | 118 | 0 | 315 | 0 | 0 | 0 | 0 | 0 | 274 | 10 | 284 | 2099 | 13 | 564 | 2676 | 3275 |
| Apprch % | 62.5 | 37.5 | 0 | | 0 | 0 | 0 | | 0 | 96.5 | 3.5 | | 78.4 | 0.5 | 21.1 | | |
| Total % | 6 | 3.6 | 0 | 9.6 | 0 | 0 | 0 | 0 | 0 | 8.4 | 0.3 | 8.7 | 64.1 | 0.4 | 17.2 | 81.7 | |

| | Yucaipa Boulevard Southbound | | | | I-10 Eastbound On Ramp Westbound | | | | Hilltop Drive Northbound | | | | I-10 Eastbound Off Ramp Eastbound | | | | |
|---|---|---|---|---|---|---|---|---|---|---|---|---|---|---|---|---|---|
| Start Time | Left | Thru | Right | App. Total | Left | Thru | Right | App. Total | Left | Thru | Right | App. Total | Left | Thru | Right | App. Total | Int. Total |
| Peak Hour Analysis From 04:00 PM to 05:45 PM - Peak 1 of 1 | | | | | | | | | | | | | | | | | |
| Peak Hour for Entire Intersection Begins at 04:45 PM | | | | | | | | | | | | | | | | | |
| 04:45 PM | **26** | 14 | 0 | **40** | 0 | 0 | 0 | 0 | 0 | **47** | **2** | **49** | 240 | 3 | 77 | 320 | 409 |
| 05:00 PM | 24 | 11 | 0 | 35 | 0 | 0 | 0 | 0 | 0 | 34 | 0 | 34 | 283 | 2 | 77 | 362 | 431 |
| 05:15 PM | 23 | 14 | 0 | 37 | 0 | 0 | 0 | 0 | 0 | 32 | 2 | 34 | **300** | **5** | **86** | **391** | **462** |
| 05:30 PM | 19 | **16** | 0 | 35 | 0 | 0 | 0 | 0 | 0 | 27 | 1 | 28 | 267 | 0 | 66 | 333 | 396 |
| Total Volume | 92 | 55 | 0 | 147 | 0 | 0 | 0 | 0 | 0 | 140 | 5 | 145 | 1090 | 10 | 306 | 1406 | 1698 |
| % App. Total | 62.6 | 37.4 | 0 | | 0 | 0 | 0 | | 0 | 96.6 | 3.4 | | 77.5 | 0.7 | 21.8 | | |
| PHF | .885 | .859 | .000 | .919 | .000 | .000 | .000 | .000 | .000 | .745 | .625 | .740 | .908 | .500 | .890 | .899 | .919 |

Counts Unlimited
PO Box 1178
Corona, CA 92878
(951) 268-6268

City of Yucaipa
N/S: Yucaipa Boulevard/Hilltop Drive
E/W: I-10 Eastbound Ramps
Weather: Clear

File Name : 01_YUC_Yucaipa Blvd_Hilltop_10E PM
Site Code : 20218899
Start Date : 12/4/2018
Page No : 2

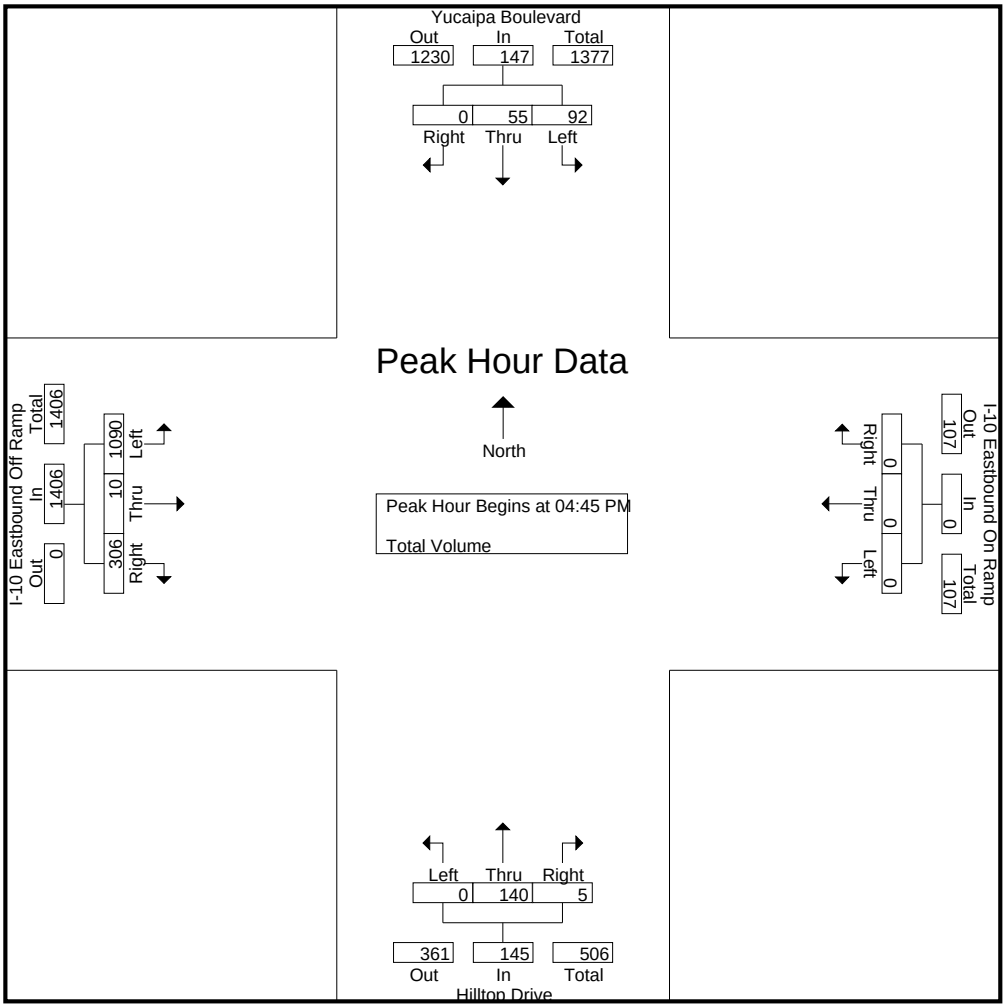


Peak Hour Analysis From 04:00 PM to 05:45 PM - Peak 1 of 1
Peak Hour for Each Approach Begins at:

| | 04:00 PM | | | | 04:00 PM | | | | 04:30 PM | | | | 05:00 PM | | | |
|---|---|---|---|---|---|---|---|---|---|---|---|---|---|---|---|---|
| +0 mins. | 26 | 16 | 0 | 42 | 0 | 0 | 0 | 0 | 0 | 45 | 1 | 46 | 283 | 2 | 77 | 362 |
| +15 mins. | 23 | **23** | 0 | **46** | 0 | 0 | 0 | 0 | 0 | **47** | **2** | **49** | **300** | **5** | **86** | **391** |
| +30 mins. | **28** | 10 | 0 | 38 | 0 | 0 | 0 | 0 | 0 | 34 | 0 | 34 | 267 | 0 | 66 | 333 |
| +45 mins. | 26 | 14 | 0 | 40 | 0 | 0 | 0 | 0 | 0 | 32 | 2 | 34 | 267 | 0 | 70 | 337 |
| Total Volume | 103 | 63 | 0 | 166 | 0 | 0 | 0 | 0 | 0 | 158 | 5 | 163 | 1117 | 7 | 299 | 1423 |
| % App. Total | 62 | 38 | 0 | | 0 | 0 | 0 | | 0 | 96.9 | 3.1 | | 78.5 | 0.5 | 21 | |
| PHF | .920 | .685 | .000 | .902 | .000 | .000 | .000 | .000 | .000 | .840 | .625 | .832 | .931 | .350 | .869 | .910 |

Counts Unlimited
PO Box 1178
Corona, CA 92878
(951) 268-6268

City of Yucaipa
N/S: Yucaipa Boulevard
E/W: I-10 Westbound Ramps
Weather: Clear

File Name : 02_YUC_Yucaipa Blvd_10W AM
Site Code : 20218899
Start Date : 12/4/2018
Page No : 1

Groups Printed- Total Volume

| | Yucaipa Boulevard Southbound | | | | I-10 Westbound Off Ramp Westbound | | | | Yucaipa Boulevard Northbound | | | | I-10 Westbound On Ramp Eastbound | | | | |
|---|---|---|---|---|---|---|---|---|---|---|---|---|---|---|---|---|---|
| Start Time | Left | Thru | Right | App. Total | Left | Thru | Right | App. Total | Left | Thru | Right | App. Total | Left | Thru | Right | App. Total | Int. Total |
| 07:00 AM | 0 | 29 | 161 | 190 | 1 | 1 | 21 | 23 | 27 | 115 | 0 | 142 | 0 | 0 | 0 | 0 | 355 |
| 07:15 AM | 0 | 30 | 156 | 186 | 2 | 0 | 7 | 9 | 17 | 128 | 0 | 145 | 0 | 0 | 0 | 0 | 340 |
| 07:30 AM | 0 | 31 | 160 | 191 | 4 | 0 | 19 | 23 | 20 | 129 | 0 | 149 | 0 | 0 | 0 | 0 | 363 |
| 07:45 AM | 0 | 31 | 164 | 195 | 3 | 0 | 20 | 23 | 17 | 139 | 0 | 156 | 0 | 0 | 0 | 0 | 374 |
| Total | 0 | 121 | 641 | 762 | 10 | 1 | 67 | 78 | 81 | 511 | 0 | 592 | 0 | 0 | 0 | 0 | 1432 |
| 08:00 AM | 0 | 26 | 161 | 187 | 2 | 0 | 21 | 23 | 32 | 137 | 0 | 169 | 0 | 0 | 0 | 0 | 379 |
| 08:15 AM | 0 | 40 | 166 | 206 | 2 | 0 | 24 | 26 | 20 | 140 | 0 | 160 | 0 | 0 | 0 | 0 | 392 |
| 08:30 AM | 0 | 28 | 139 | 167 | 7 | 0 | 26 | 33 | 23 | 137 | 0 | 160 | 0 | 0 | 0 | 0 | 360 |
| 08:45 AM | 0 | 28 | 147 | 175 | 3 | 2 | 35 | 40 | 18 | 141 | 0 | 159 | 0 | 0 | 0 | 0 | 374 |
| Total | 0 | 122 | 613 | 735 | 14 | 2 | 106 | 122 | 93 | 555 | 0 | 648 | 0 | 0 | 0 | 0 | 1505 |
| Grand Total | 0 | 243 | 1254 | 1497 | 24 | 3 | 173 | 200 | 174 | 1066 | 0 | 1240 | 0 | 0 | 0 | 0 | 2937 |
| Apprch % | 0 | 16.2 | 83.8 | | 12 | 1.5 | 86.5 | | 14 | 86 | 0 | | 0 | 0 | 0 | | |
| Total % | 0 | 8.3 | 42.7 | 51 | 0.8 | 0.1 | 5.9 | 6.8 | 5.9 | 36.3 | 0 | 42.2 | 0 | 0 | 0 | 0 | |

| | Yucaipa Boulevard Southbound | | | | I-10 Westbound Off Ramp Westbound | | | | Yucaipa Boulevard Northbound | | | | I-10 Westbound On Ramp Eastbound | | | | |
|---|---|---|---|---|---|---|---|---|---|---|---|---|---|---|---|---|---|
| Start Time | Left | Thru | Right | App. Total | Left | Thru | Right | App. Total | Left | Thru | Right | App. Total | Left | Thru | Right | App. Total | Int. Total |
| Peak Hour Analysis From 07:00 AM to 08:45 AM - Peak 1 of 1 | | | | | | | | | | | | | | | | | |
| Peak Hour for Entire Intersection Begins at 07:30 AM | | | | | | | | | | | | | | | | | |
| 07:30 AM | 0 | 31 | 160 | 191 | **4** | 0 | 19 | 23 | 20 | 129 | 0 | 149 | 0 | 0 | 0 | 0 | 363 |
| 07:45 AM | 0 | 31 | 164 | 195 | 3 | 0 | 20 | 23 | 17 | 139 | 0 | 156 | 0 | 0 | 0 | 0 | 374 |
| 08:00 AM | 0 | 26 | 161 | 187 | 2 | 0 | 21 | 23 | **32** | 137 | 0 | **169** | 0 | 0 | 0 | 0 | 379 |
| 08:15 AM | 0 | **40** | **166** | **206** | 2 | 0 | **24** | **26** | 20 | **140** | 0 | 160 | 0 | 0 | 0 | 0 | **392** |
| Total Volume | 0 | 128 | 651 | 779 | 11 | 0 | 84 | 95 | 89 | 545 | 0 | 634 | 0 | 0 | 0 | 0 | 1508 |
| % App. Total | 0 | 16.4 | 83.6 | | 11.6 | 0 | 88.4 | | 14 | 86 | 0 | | 0 | 0 | 0 | | |
| PHF | .000 | .800 | .980 | .945 | .688 | .000 | .875 | .913 | .695 | .973 | .000 | .938 | .000 | .000 | .000 | .000 | .962 |

Counts Unlimited
PO Box 1178
Corona, CA 92878
(951) 268-6268

City of Yucaipa
N/S: Yucaipa Boulevard
E/W: I-10 Westbound Ramps
Weather: Clear

File Name : 02_YUC_Yucaipa Blvd_10W AM
Site Code : 20218899
Start Date : 12/4/2018
Page No : 2

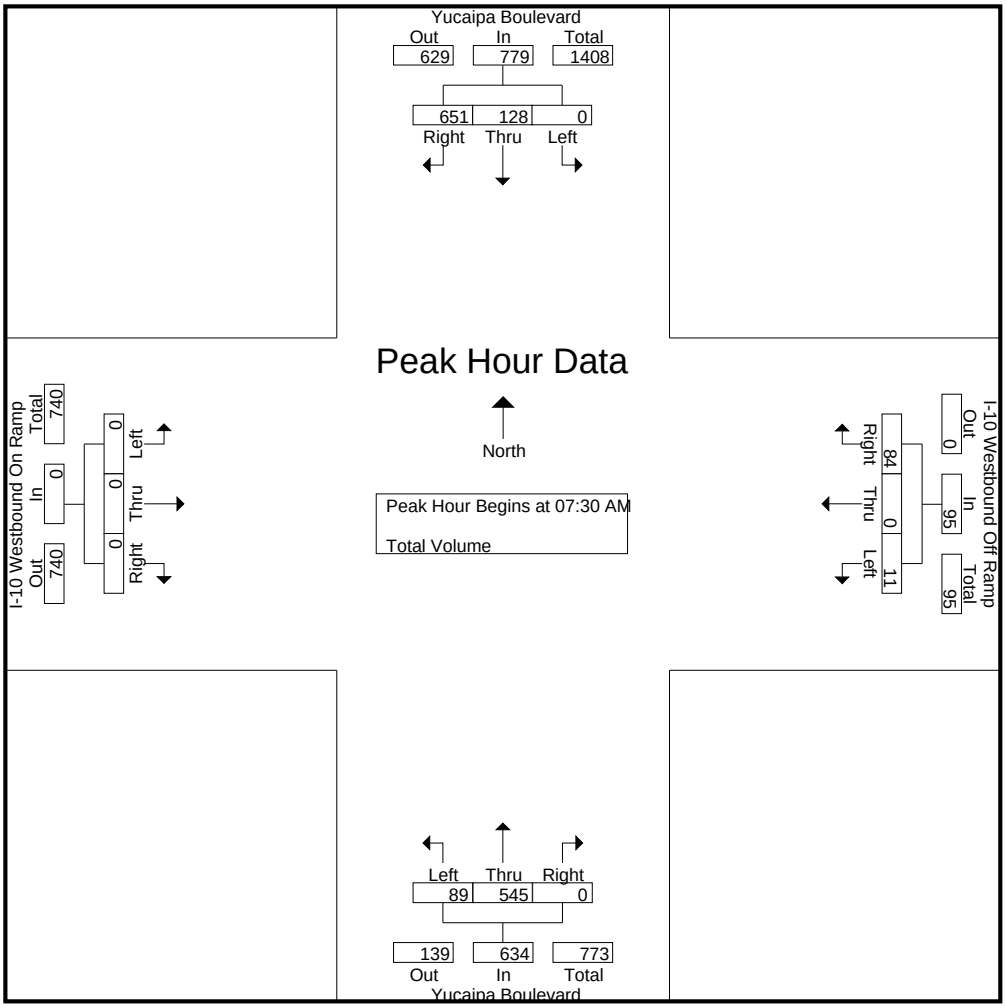


Peak Hour Analysis From 07:00 AM to 08:45 AM - Peak 1 of 1
Peak Hour for Each Approach Begins at:

| | 07:30 AM | | | | 08:00 AM | | | | 08:00 AM | | | | 07:00 AM | | | |
|---|---|---|---|---|---|---|---|---|---|---|---|---|---|---|---|---|
| +0 mins. | 0 | 31 | 160 | 191 | 2 | 0 | 21 | 23 | **32** | 137 | 0 | **169** | 0 | 0 | 0 | 0 |
| +15 mins. | 0 | 31 | 164 | 195 | 2 | 0 | 24 | 26 | 20 | 140 | 0 | 160 | 0 | 0 | 0 | 0 |
| +30 mins. | 0 | 26 | 161 | 187 | **7** | 0 | 26 | 33 | 23 | 137 | 0 | 160 | 0 | 0 | 0 | 0 |
| +45 mins. | 0 | **40** | **166** | **206** | 3 | **2** | **35** | **40** | 18 | **141** | 0 | 159 | 0 | 0 | 0 | 0 |
| Total Volume | 0 | 128 | 651 | 779 | 14 | 2 | 106 | 122 | 93 | 555 | 0 | 648 | 0 | 0 | 0 | 0 |
| % App. Total | 0 | 16.4 | 83.6 | | 11.5 | 1.6 | 86.9 | | 14.4 | 85.6 | 0 | | 0 | 0 | 0 | |
| PHF | .000 | .800 | .980 | .945 | .500 | .250 | .757 | .763 | .727 | .984 | .000 | .959 | .000 | .000 | .000 | .000 |

Counts Unlimited
PO Box 1178
Corona, CA 92878
(951) 268-6268

City of Yucaipa
N/S: Yucaipa Boulevard
E/W: I-10 Westbound Ramps
Weather: Clear

File Name : 02_YUC_Yucaipa Blvd_10W PM
Site Code : 20218899
Start Date : 12/4/2018
Page No : 1

Groups Printed- Total Volume

| | Yucaipa Boulevard Southbound | | | | I-10 Westbound Off Ramp Westbound | | | | Yucaipa Boulevard Northbound | | | | I-10 Westbound On Ramp Eastbound | | | | |
|---|---|---|---|---|---|---|---|---|---|---|---|---|---|---|---|---|---|
| Start Time | Left | Thru | Right | App. Total | Left | Thru | Right | App. Total | Left | Thru | Right | App. Total | Left | Thru | Right | App. Total | Int. Total |
| 04:00 PM | 0 | 36 | 163 | 199 | 4 | 0 | 23 | 27 | 26 | 255 | 0 | 281 | 0 | 0 | 0 | 0 | 507 |
| 04:15 PM | 0 | 38 | 150 | 188 | 4 | 0 | 20 | 24 | 25 | 266 | 0 | 291 | 0 | 0 | 0 | 0 | 503 |
| 04:30 PM | 0 | 35 | 176 | 211 | 3 | 0 | 35 | 38 | 36 | 257 | 0 | 293 | 0 | 0 | 0 | 0 | 542 |
| 04:45 PM | 0 | 40 | 182 | 222 | 2 | 0 | 37 | 39 | 27 | 261 | 0 | 288 | 0 | 0 | 0 | 0 | 549 |
| Total | 0 | 149 | 671 | 820 | 13 | 0 | 115 | 128 | 114 | 1039 | 0 | 1153 | 0 | 0 | 0 | 0 | 2101 |
| 05:00 PM | 0 | 30 | 188 | 218 | 3 | 0 | 38 | 41 | 16 | 283 | 0 | 299 | 0 | 0 | 0 | 0 | 558 |
| 05:15 PM | 0 | 35 | 171 | 206 | 4 | 0 | 26 | 30 | 20 | 321 | 0 | 341 | 0 | 0 | 0 | 0 | 577 |
| 05:30 PM | 0 | 33 | 163 | 196 | 2 | 1 | 25 | 28 | 16 | 283 | 0 | 299 | 0 | 0 | 0 | 0 | 523 |
| 05:45 PM | 0 | 40 | 134 | 174 | 2 | 0 | 29 | 31 | 14 | 272 | 0 | 286 | 0 | 0 | 0 | 0 | 491 |
| Total | 0 | 138 | 656 | 794 | 11 | 1 | 118 | 130 | 66 | 1159 | 0 | 1225 | 0 | 0 | 0 | 0 | 2149 |
| Grand Total | 0 | 287 | 1327 | 1614 | 24 | 1 | 233 | 258 | 180 | 2198 | 0 | 2378 | 0 | 0 | 0 | 0 | 4250 |
| Apprch % | 0 | 17.8 | 82.2 | | 9.3 | 0.4 | 90.3 | | 7.6 | 92.4 | 0 | | 0 | 0 | 0 | | |
| Total % | 0 | 6.8 | 31.2 | 38 | 0.6 | 0 | 5.5 | 6.1 | 4.2 | 51.7 | 0 | 56 | 0 | 0 | 0 | 0 | |

| | Yucaipa Boulevard Southbound | | | | I-10 Westbound Off Ramp Westbound | | | | Yucaipa Boulevard Northbound | | | | I-10 Westbound On Ramp Eastbound | | | | |
|---|---|---|---|---|---|---|---|---|---|---|---|---|---|---|---|---|---|
| Start Time | Left | Thru | Right | App. Total | Left | Thru | Right | App. Total | Left | Thru | Right | App. Total | Left | Thru | Right | App. Total | Int. Total |
| Peak Hour Analysis From 04:00 PM to 05:45 PM - Peak 1 of 1 | | | | | | | | | | | | | | | | | |
| Peak Hour for Entire Intersection Begins at 04:30 PM | | | | | | | | | | | | | | | | | |
| 04:30 PM | 0 | 35 | 176 | 211 | 3 | 0 | 35 | 38 | **36** | 257 | 0 | 293 | 0 | 0 | 0 | 0 | 542 |
| 04:45 PM | 0 | **40** | 182 | **222** | 2 | 0 | 37 | 39 | 27 | 261 | 0 | 288 | 0 | 0 | 0 | 0 | 549 |
| 05:00 PM | 0 | 30 | **188** | 218 | 3 | 0 | **38** | **41** | 16 | 283 | 0 | 299 | 0 | 0 | 0 | 0 | 558 |
| 05:15 PM | 0 | 35 | 171 | 206 | **4** | 0 | 26 | 30 | 20 | **321** | 0 | **341** | 0 | 0 | 0 | 0 | **577** |
| Total Volume | 0 | 140 | 717 | 857 | 12 | 0 | 136 | 148 | 99 | 1122 | 0 | 1221 | 0 | 0 | 0 | 0 | 2226 |
| % App. Total | 0 | 16.3 | 83.7 | | 8.1 | 0 | 91.9 | | 8.1 | 91.9 | 0 | | 0 | 0 | 0 | | |
| PHF | .000 | .875 | .953 | .965 | .750 | .000 | .895 | .902 | .688 | .874 | .000 | .895 | .000 | .000 | .000 | .000 | .964 |

Counts Unlimited
PO Box 1178
Corona, CA 92878
(951) 268-6268

City of Yucaipa
N/S: Yucaipa Boulevard
E/W: I-10 Westbound Ramps
Weather: Clear

File Name : 02_YUC_Yucaipa Blvd_10W PM
Site Code : 20218899
Start Date : 12/4/2018
Page No : 2

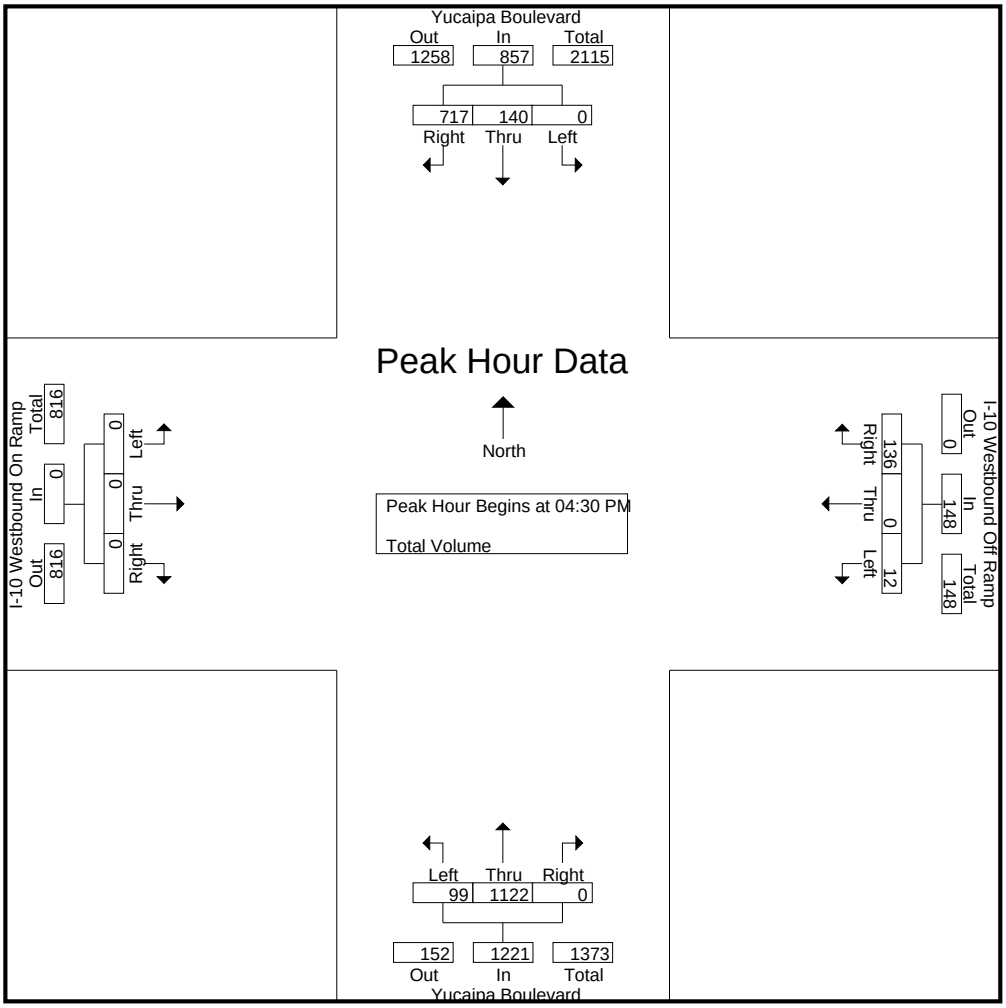


Peak Hour Analysis From 04:00 PM to 05:45 PM - Peak 1 of 1
Peak Hour for Each Approach Begins at:

| | 04:30 PM | | | | 04:30 PM | | | | 04:45 PM | | | | 04:00 PM | | | |
|---|---|---|---|---|---|---|---|---|---|---|---|---|---|---|---|---|
| +0 mins. | 0 | 35 | 176 | 211 | 3 | 0 | 35 | 38 | **27** | 261 | 0 | 288 | 0 | 0 | 0 | 0 |
| +15 mins. | 0 | **40** | 182 | **222** | 2 | 0 | 37 | 39 | 16 | 283 | 0 | 299 | 0 | 0 | 0 | 0 |
| +30 mins. | 0 | 30 | **188** | 218 | 3 | 0 | **38** | **41** | 20 | **321** | 0 | **341** | 0 | 0 | 0 | 0 |
| +45 mins. | 0 | 35 | 171 | 206 | **4** | 0 | 26 | 30 | 16 | 283 | 0 | 299 | 0 | 0 | 0 | 0 |
| Total Volume | 0 | 140 | 717 | 857 | 12 | 0 | 136 | 148 | 79 | 1148 | 0 | 1227 | 0 | 0 | 0 | 0 |
| % App. Total | 0 | 16.3 | 83.7 | | 8.1 | 0 | 91.9 | | 6.4 | 93.6 | 0 | | 0 | 0 | 0 | |
| PHF | .000 | .875 | .953 | .965 | .750 | .000 | .895 | .902 | .731 | .894 | .000 | .900 | .000 | .000 | .000 | .000 |

Counts Unlimited
PO Box 1178
Corona, CA 92878
(951) 268-6268

City of Yucaipa
N/S: Yucaipa Boulevard
E/W: Hampton Road/Avenue E
Weather: Clear

File Name : 03_YUC_Yucaipa Blvd_Hampton_Ave E AM
Site Code : 20218899
Start Date : 12/4/2018
Page No : 1

Groups Printed- Total Volume

| | Yucaipa Boulevard Southbound | | | | Avenue E Westbound | | | | Yucaipa Boulevard Northbound | | | | Hampton Road Eastbound | | | | |
|---|---|---|---|---|---|---|---|---|---|---|---|---|---|---|---|---|---|
| Start Time | Left | Thru | Right | App. Total | Left | Thru | Right | App. Total | Left | Thru | Right | App. Total | Left | Thru | Right | App. Total | Int. Total |
| 07:00 AM | 2 | 111 | 8 | 121 | 33 | 17 | 6 | 56 | 31 | 86 | 14 | 131 | 36 | 3 | 33 | 72 | 380 |
| 07:15 AM | 2 | 110 | 10 | 122 | 30 | 3 | 4 | 37 | 22 | 90 | 20 | 132 | 35 | 2 | 35 | 72 | 363 |
| 07:30 AM | 3 | 119 | 11 | 133 | 31 | 14 | 3 | 48 | 35 | 88 | 20 | 143 | 36 | 6 | 35 | 77 | 401 |
| 07:45 AM | 4 | 124 | 24 | 152 | 33 | 4 | 5 | 42 | 26 | 109 | 19 | 154 | 37 | 4 | 32 | 73 | 421 |
| Total | 11 | 464 | 53 | 528 | 127 | 38 | 18 | 183 | 114 | 373 | 73 | 560 | 144 | 15 | 135 | 294 | 1565 |
| | | | | | | | | | | | | | | | | | |
| 08:00 AM | 4 | 109 | 17 | 130 | 27 | 10 | 2 | 39 | 44 | 95 | 22 | 161 | 35 | 6 | 42 | 83 | 413 |
| 08:15 AM | 2 | 121 | 16 | 139 | 37 | 7 | 7 | 51 | 37 | 113 | 13 | 163 | 39 | 4 | 42 | 85 | 438 |
| 08:30 AM | 6 | 103 | 15 | 124 | 27 | 5 | 5 | 37 | 39 | 110 | 19 | 168 | 28 | 4 | 33 | 65 | 394 |
| 08:45 AM | 4 | 103 | 20 | 127 | 33 | 5 | 4 | 42 | 33 | 115 | 30 | 178 | 29 | 4 | 37 | 70 | 417 |
| Total | 16 | 436 | 68 | 520 | 124 | 27 | 18 | 169 | 153 | 433 | 84 | 670 | 131 | 18 | 154 | 303 | 1662 |
| | | | | | | | | | | | | | | | | | |
| Grand Total | 27 | 900 | 121 | 1048 | 251 | 65 | 36 | 352 | 267 | 806 | 157 | 1230 | 275 | 33 | 289 | 597 | 3227 |
| Apprch % | 2.6 | 85.9 | 11.5 | | 71.3 | 18.5 | 10.2 | | 21.7 | 65.5 | 12.8 | | 46.1 | 5.5 | 48.4 | | |
| Total % | 0.8 | 27.9 | 3.7 | 32.5 | 7.8 | 2 | 1.1 | 10.9 | 8.3 | 25 | 4.9 | 38.1 | 8.5 | 1 | 9 | 18.5 | |

| | Yucaipa Boulevard Southbound | | | | Avenue E Westbound | | | | Yucaipa Boulevard Northbound | | | | Hampton Road Eastbound | | | | |
|---|---|---|---|---|---|---|---|---|---|---|---|---|---|---|---|---|---|
| Start Time | Left | Thru | Right | App. Total | Left | Thru | Right | App. Total | Left | Thru | Right | App. Total | Left | Thru | Right | App. Total | Int. Total |
| Peak Hour Analysis From 07:00 AM to 08:45 AM - Peak 1 of 1 | | | | | | | | | | | | | | | | | |
| Peak Hour for Entire Intersection Begins at 07:30 AM | | | | | | | | | | | | | | | | | |
| 07:30 AM | 3 | 119 | 11 | 133 | 31 | **14** | 3 | 48 | 35 | 88 | 20 | 143 | 36 | **6** | 35 | 77 | 401 |
| 07:45 AM | **4** | **124** | **24** | **152** | 33 | 4 | 5 | 42 | 26 | 109 | 19 | 154 | 37 | 4 | 32 | 73 | 421 |
| 08:00 AM | 4 | 109 | 17 | 130 | 27 | 10 | 2 | 39 | **44** | 95 | **22** | 161 | 35 | 6 | **42** | 83 | 413 |
| 08:15 AM | 2 | 121 | 16 | 139 | **37** | 7 | **7** | **51** | 37 | **113** | 13 | **163** | **39** | 4 | 42 | **85** | **438** |
| Total Volume | 13 | 473 | 68 | 554 | 128 | 35 | 17 | 180 | 142 | 405 | 74 | 621 | 147 | 20 | 151 | 318 | 1673 |
| % App. Total | 2.3 | 85.4 | 12.3 | | 71.1 | 19.4 | 9.4 | | 22.9 | 65.2 | 11.9 | | 46.2 | 6.3 | 47.5 | | |
| PHF | .813 | .954 | .708 | .911 | .865 | .625 | .607 | .882 | .807 | .896 | .841 | .952 | .942 | .833 | .899 | .935 | .955 |

Counts Unlimited
PO Box 1178
Corona, CA 92878
(951) 268-6268

City of Yucaipa
N/S: Yucaipa Boulevard
E/W: Hampton Road/Avenue E
Weather: Clear

File Name : 03_YUC_Yucaipa Blvd_Hampton_Ave E AM
Site Code : 20218899
Start Date : 12/4/2018
Page No : 2

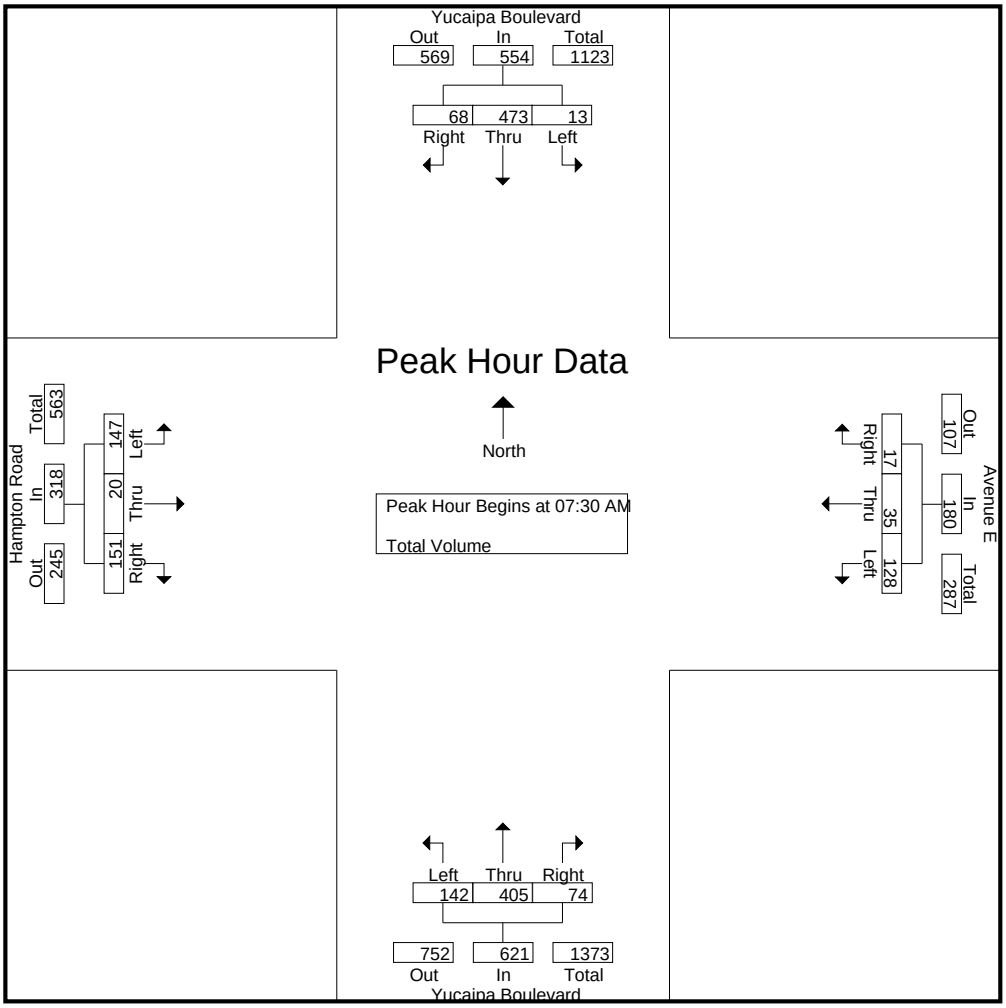


Peak Hour Analysis From 07:00 AM to 08:45 AM - Peak 1 of 1
Peak Hour for Each Approach Begins at:

| | 07:30 AM | | | | 07:00 AM | | | | 08:00 AM | | | | 07:30 AM | | | |
|---|---|---|---|---|---|---|---|---|---|---|---|---|---|---|---|---|
| +0 mins. | 3 | 119 | 11 | 133 | **33** | **17** | **6** | **56** | **44** | 95 | 22 | 161 | 36 | **6** | 35 | 77 |
| +15 mins. | **4** | **124** | **24** | **152** | 30 | 3 | 4 | 37 | 37 | 113 | 13 | 163 | 37 | 4 | 32 | 73 |
| +30 mins. | 4 | 109 | 17 | 130 | 31 | 14 | 3 | 48 | 39 | 110 | 19 | 168 | 35 | 6 | **42** | 83 |
| +45 mins. | 2 | 121 | 16 | 139 | 33 | 4 | 5 | 42 | 33 | **115** | **30** | **178** | **39** | 4 | 42 | **85** |
| Total Volume | 13 | 473 | 68 | 554 | 127 | 38 | 18 | 183 | 153 | 433 | 84 | 670 | 147 | 20 | 151 | 318 |
| % App. Total | 2.3 | 85.4 | 12.3 | | 69.4 | 20.8 | 9.8 | | 22.8 | 64.6 | 12.5 | | 46.2 | 6.3 | 47.5 | |
| PHF | .813 | .954 | .708 | .911 | .962 | .559 | .750 | .817 | .869 | .941 | .700 | .941 | .942 | .833 | .899 | .935 |

Counts Unlimited
PO Box 1178
Corona, CA 92878
(951) 268-6268

City of Yucaipa
N/S: Yucaipa Boulevard
E/W: Hampton Road/Avenue E
Weather: Clear

File Name : 03_YUC_Yucaipa Blvd_Hampton_Ave E PM
Site Code : 20218899
Start Date : 12/4/2018
Page No : 1

Groups Printed- Total Volume

| | Yucaipa Boulevard Southbound | | | | Avenue E Westbound | | | | Yucaipa Boulevard Northbound | | | | Hampton Road Eastbound | | | | |
|---|---|---|---|---|---|---|---|---|---|---|---|---|---|---|---|---|---|
| Start Time | Left | Thru | Right | App. Total | Left | Thru | Right | App. Total | Left | Thru | Right | App. Total | Left | Thru | Right | App. Total | Int. Total |
| 04:00 PM | 10 | 113 | 14 | 137 | 37 | 11 | 14 | 62 | 45 | 189 | 39 | 273 | 32 | 7 | 43 | 82 | 554 |
| 04:15 PM | 9 | 98 | 10 | 117 | 30 | 8 | 15 | 53 | 39 | 205 | 38 | 282 | 38 | 12 | 55 | 105 | 557 |
| 04:30 PM | 19 | 134 | 14 | 167 | 43 | 9 | 7 | 59 | 39 | 206 | 47 | 292 | 23 | 4 | 30 | 57 | 575 |
| 04:45 PM | 15 | 122 | 10 | 147 | 45 | 11 | 15 | 71 | 40 | 193 | 58 | 291 | 37 | 5 | 45 | 87 | 596 |
| Total | 53 | 467 | 48 | 568 | 155 | 39 | 51 | 245 | 163 | 793 | 182 | 1138 | 130 | 28 | 173 | 331 | 2282 |
| | | | | | | | | | | | | | | | | | |
| 05:00 PM | 11 | 117 | 15 | 143 | 47 | 8 | 18 | 73 | 45 | 226 | 44 | 315 | 29 | 5 | 44 | 78 | 609 |
| 05:15 PM | 22 | 114 | 7 | 143 | 36 | 7 | 8 | 51 | 36 | 260 | 44 | 340 | 19 | 9 | 48 | 76 | 610 |
| 05:30 PM | 21 | 126 | 12 | 159 | 43 | 7 | 15 | 65 | 38 | 233 | 41 | 312 | 16 | 3 | 37 | 56 | 592 |
| 05:45 PM | 13 | 108 | 12 | 133 | 30 | 10 | 15 | 55 | 39 | 223 | 40 | 302 | 11 | 2 | 29 | 42 | 532 |
| Total | 67 | 465 | 46 | 578 | 156 | 32 | 56 | 244 | 158 | 942 | 169 | 1269 | 75 | 19 | 158 | 252 | 2343 |
| | | | | | | | | | | | | | | | | | |
| Grand Total | 120 | 932 | 94 | 1146 | 311 | 71 | 107 | 489 | 321 | 1735 | 351 | 2407 | 205 | 47 | 331 | 583 | 4625 |
| Apprch % | 10.5 | 81.3 | 8.2 | | 63.6 | 14.5 | 21.9 | | 13.3 | 72.1 | 14.6 | | 35.2 | 8.1 | 56.8 | | |
| Total % | 2.6 | 20.2 | 2 | 24.8 | 6.7 | 1.5 | 2.3 | 10.6 | 6.9 | 37.5 | 7.6 | 52 | 4.4 | 1 | 7.2 | 12.6 | |

| | Yucaipa Boulevard Southbound | | | | Avenue E Westbound | | | | Yucaipa Boulevard Northbound | | | | Hampton Road Eastbound | | | | |
|---|---|---|---|---|---|---|---|---|---|---|---|---|---|---|---|---|---|
| Start Time | Left | Thru | Right | App. Total | Left | Thru | Right | App. Total | Left | Thru | Right | App. Total | Left | Thru | Right | App. Total | Int. Total |
| Peak Hour Analysis From 04:00 PM to 05:45 PM - Peak 1 of 1 | | | | | | | | | | | | | | | | | |
| Peak Hour for Entire Intersection Begins at 04:45 PM | | | | | | | | | | | | | | | | | |
| 04:45 PM | 15 | 122 | 10 | 147 | 45 | **11** | 15 | 71 | 40 | 193 | **58** | 291 | **37** | 5 | 45 | **87** | 596 |
| 05:00 PM | 11 | 117 | **15** | 143 | **47** | 8 | **18** | **73** | **45** | 226 | 44 | 315 | 29 | 5 | 44 | 78 | 609 |
| 05:15 PM | **22** | 114 | 7 | 143 | 36 | 7 | 8 | 51 | 36 | **260** | 44 | **340** | 19 | **9** | **48** | 76 | **610** |
| 05:30 PM | 21 | **126** | 12 | **159** | 43 | 7 | 15 | 65 | 38 | 233 | 41 | 312 | 16 | 3 | 37 | 56 | 592 |
| Total Volume | 69 | 479 | 44 | 592 | 171 | 33 | 56 | 260 | 159 | 912 | 187 | 1258 | 101 | 22 | 174 | 297 | 2407 |
| % App. Total | 11.7 | 80.9 | 7.4 | | 65.8 | 12.7 | 21.5 | | 12.6 | 72.5 | 14.9 | | 34 | 7.4 | 58.6 | | |
| PHF | .784 | .950 | .733 | .931 | .910 | .750 | .778 | .890 | .883 | .877 | .806 | .925 | .682 | .611 | .906 | .853 | .986 |

Counts Unlimited
PO Box 1178
Corona, CA 92878
(951) 268-6268

City of Yucaipa
N/S: Yucaipa Boulevard
E/W: Hampton Road/Avenue E
Weather: Clear

File Name : 03_YUC_Yucaipa Blvd_Hampton_Ave E PM
Site Code : 20218899
Start Date : 12/4/2018
Page No : 2

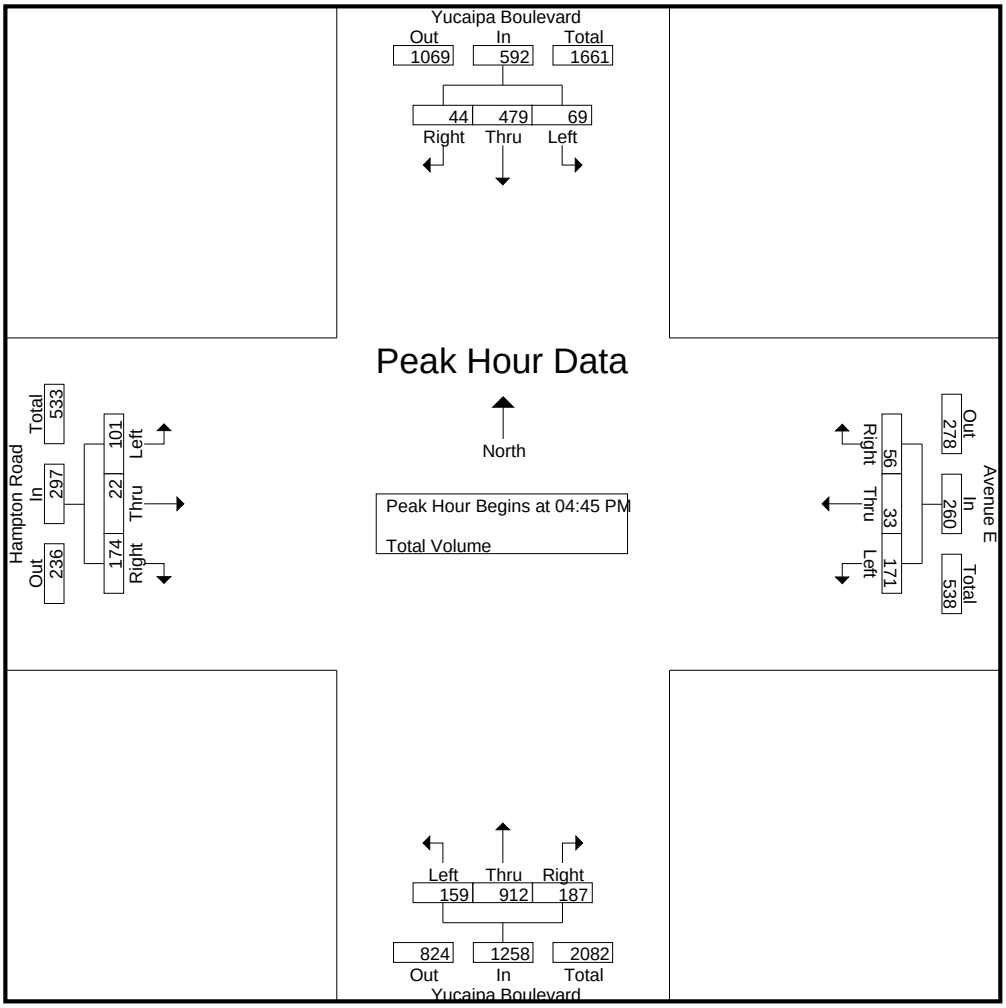


Peak Hour Analysis From 04:00 PM to 05:45 PM - Peak 1 of 1
Peak Hour for Each Approach Begins at:

| | 04:30 PM | | | | 04:45 PM | | | | 05:00 PM | | | | 04:00 PM | | | |
|---|---|---|---|---|---|---|---|---|---|---|---|---|---|---|---|---|
| +0 mins. | 19 | **134** | 14 | **167** | 45 | **11** | 15 | 71 | **45** | 226 | **44** | 315 | 32 | 7 | 43 | 82 |
| +15 mins. | 15 | 122 | 10 | 147 | **47** | 8 | **18** | **73** | 36 | **260** | 44 | **340** | **38** | **12** | **55** | **105** |
| +30 mins. | 11 | 117 | **15** | 143 | 36 | 7 | 8 | 51 | 38 | 233 | 41 | 312 | 23 | 4 | 30 | 57 |
| +45 mins. | **22** | 114 | 7 | 143 | 43 | 7 | 15 | 65 | 39 | 223 | 40 | 302 | 37 | 5 | 45 | 87 |
| Total Volume | 67 | 487 | 46 | 600 | 171 | 33 | 56 | 260 | 158 | 942 | 169 | 1269 | 130 | 28 | 173 | 331 |
| % App. Total | 11.2 | 81.2 | 7.7 | | 65.8 | 12.7 | 21.5 | | 12.5 | 74.2 | 13.3 | | 39.3 | 8.5 | 52.3 | |
| PHF | .761 | .909 | .767 | .898 | .910 | .750 | .778 | .890 | .878 | .906 | .960 | .933 | .855 | .583 | .786 | .788 |

Counts Unlimited
PO Box 1178
Corona, CA 92878
(951) 268-6268

City of Yucaipa
N/S: Knollhaven Lane
E/W: Yucaipa Boulevard
Weather: Clear

File Name : 04_YUC_Knollhaven_Yucaipa Blvd AM
Site Code : 20218899
Start Date : 12/4/2018
Page No : 1

Groups Printed- Total Volume

| | Knollhaven Lane Southbound | | | Yucaipa Boulevard Westbound | | | Yucaipa Boulevard Eastbound | | | |
|---|---|---|---|---|---|---|---|---|---|---|
| Start Time | Left | Right | App. Total | Thru | Right | App. Total | Left | Thru | App. Total | Int. Total |
| 07:00 AM | 0 | 1 | 1 | 148 | 0 | 148 | 0 | 99 | 99 | 248 |
| 07:15 AM | 0 | 0 | 0 | 131 | 0 | 131 | 1 | 110 | 111 | 242 |
| 07:30 AM | 1 | 1 | 2 | 140 | 1 | 141 | 2 | 109 | 111 | 254 |
| 07:45 AM | 0 | 0 | 0 | 156 | 2 | 158 | 1 | 127 | 128 | 286 |
| Total | 1 | 2 | 3 | 575 | 3 | 578 | 4 | 445 | 449 | 1030 |
| 08:00 AM | 0 | 2 | 2 | 145 | 0 | 145 | 0 | 105 | 105 | 252 |
| 08:15 AM | 0 | 0 | 0 | 155 | 0 | 155 | 3 | 122 | 125 | 280 |
| 08:30 AM | 1 | 1 | 2 | 115 | 0 | 115 | 1 | 136 | 137 | 254 |
| 08:45 AM | 1 | 2 | 3 | 136 | 0 | 136 | 0 | 140 | 140 | 279 |
| Total | 2 | 5 | 7 | 551 | 0 | 551 | 4 | 503 | 507 | 1065 |
| Grand Total | 3 | 7 | 10 | 1126 | 3 | 1129 | 8 | 948 | 956 | 2095 |
| Apprch % | 30 | 70 | | 99.7 | 0.3 | | 0.8 | 99.2 | | |
| Total % | 0.1 | 0.3 | 0.5 | 53.7 | 0.1 | 53.9 | 0.4 | 45.3 | 45.6 | |

| | Knollhaven Lane Southbound | | | Yucaipa Boulevard Westbound | | | Yucaipa Boulevard Eastbound | | | |
|---|---|---|---|---|---|---|---|---|---|---|
| Start Time | Left | Right | App. Total | Thru | Right | App. Total | Left | Thru | App. Total | Int. Total |
| Peak Hour Analysis From 07:00 AM to 08:45 AM - Peak 1 of 1 | | | | | | | | | | |
| Peak Hour for Entire Intersection Begins at 07:30 AM | | | | | | | | | | |
| 07:30 AM | **1** | 1 | **2** | 140 | 1 | 141 | 2 | 109 | 111 | 254 |
| 07:45 AM | 0 | 0 | 0 | **156** | **2** | **158** | 1 | **127** | **128** | **286** |
| 08:00 AM | 0 | **2** | 2 | 145 | 0 | 145 | 0 | 105 | 105 | 252 |
| 08:15 AM | 0 | 0 | 0 | 155 | 0 | 155 | **3** | 122 | 125 | 280 |
| Total Volume | 1 | 3 | 4 | 596 | 3 | 599 | 6 | 463 | 469 | 1072 |
| % App. Total | 25 | 75 | | 99.5 | 0.5 | | 1.3 | 98.7 | | |
| PHF | .250 | .375 | .500 | .955 | .375 | .948 | .500 | .911 | .916 | .937 |

Counts Unlimited
PO Box 1178
Corona, CA 92878
(951) 268-6268

City of Yucaipa
N/S: Knollhaven Lane
E/W: Yucaipa Boulevard
Weather: Clear

File Name : 04_YUC_Knollhaven_Yucaipa Blvd AM
Site Code : 20218899
Start Date : 12/4/2018
Page No : 2

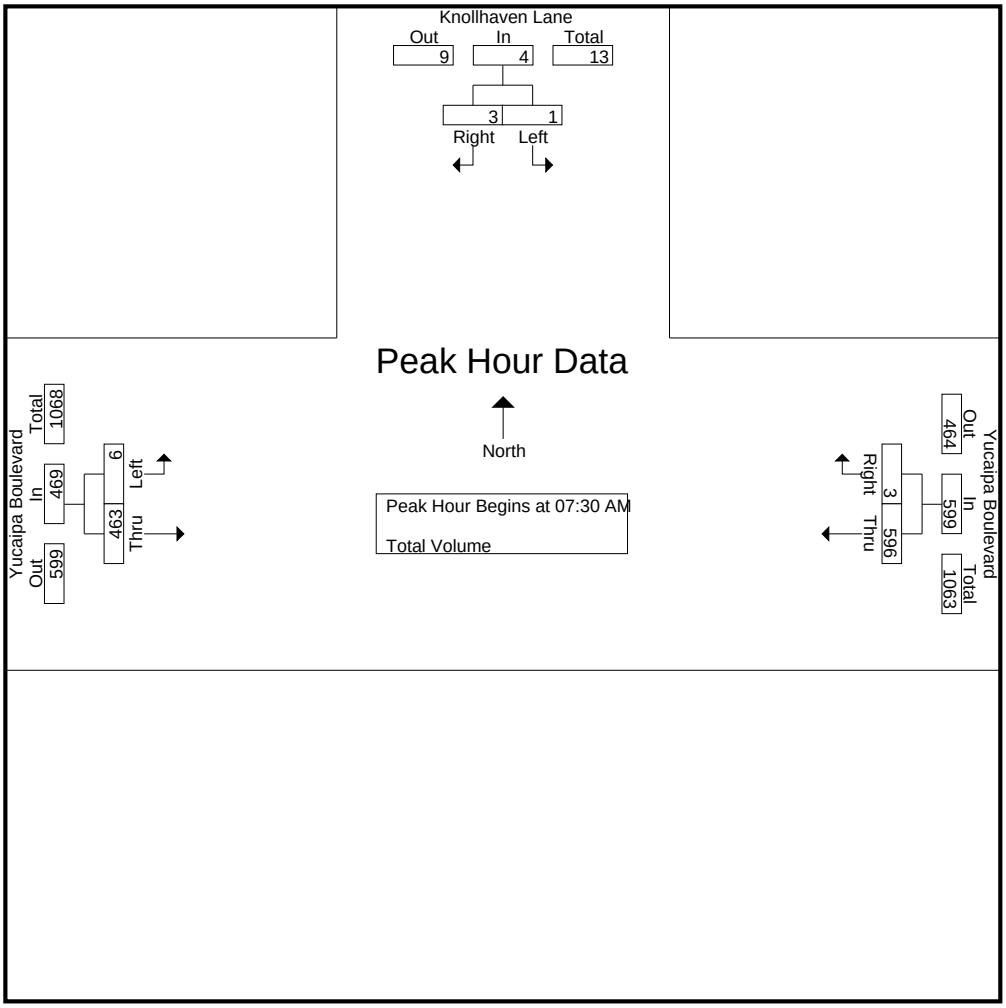


Peak Hour Analysis From 07:00 AM to 08:45 AM - Peak 1 of 1
Peak Hour for Each Approach Begins at:

| | 08:00 AM | | | 07:30 AM | | | 08:00 AM | | |
|---|---|---|---|---|---|---|---|---|---|
| +0 mins. | 0 | **2** | 2 | 140 | 1 | 141 | 0 | 105 | 105 |
| +15 mins. | 0 | 0 | 0 | **156** | **2** | **158** | **3** | 122 | 125 |
| +30 mins. | **1** | 1 | 2 | 145 | 0 | 145 | 1 | 136 | 137 |
| +45 mins. | 1 | 2 | **3** | 155 | 0 | 155 | 0 | **140** | **140** |
| Total Volume | 2 | 5 | 7 | 596 | 3 | 599 | 4 | 503 | 507 |
| % App. Total | 28.6 | 71.4 | | 99.5 | 0.5 | | 0.8 | 99.2 | |
| PHF | .500 | .625 | .583 | .955 | .375 | .948 | .333 | .898 | .905 |

Counts Unlimited
PO Box 1178
Corona, CA 92878
(951) 268-6268

City of Yucaipa
N/S: Knollhaven Lane
E/W: Yucaipa Boulevard
Weather: Clear

File Name : 04_YUC_Knollhaven_Yucaipa Blvd PM
Site Code : 20218899
Start Date : 12/4/2018
Page No : 1

Groups Printed- Total Volume

| | Knollhaven Lane Southbound | | | Yucaipa Boulevard Westbound | | | Yucaipa Boulevard Eastbound | | | |
|---|---|---|---|---|---|---|---|---|---|---|
| Start Time | Left | Right | App. Total | Thru | Right | App. Total | Left | Thru | App. Total | Int. Total |
| 04:00 PM | 3 | 2 | 5 | 146 | 0 | 146 | 2 | 193 | 195 | 346 |
| 04:15 PM | 1 | 1 | 2 | 131 | 0 | 131 | 2 | 239 | 241 | 374 |
| 04:30 PM | 1 | 1 | 2 | 191 | 0 | 191 | 7 | 236 | 243 | 436 |
| 04:45 PM | 0 | 4 | 4 | 164 | 0 | 164 | 5 | 212 | 217 | 385 |
| Total | 5 | 8 | 13 | 632 | 0 | 632 | 16 | 880 | 896 | 1541 |
| 05:00 PM | 3 | 5 | 8 | 159 | 1 | 160 | 3 | 266 | 269 | 437 |
| 05:15 PM | 0 | 7 | 7 | 142 | 0 | 142 | 4 | 281 | 285 | 434 |
| 05:30 PM | 2 | 4 | 6 | 164 | 1 | 165 | 2 | 280 | 282 | 453 |
| 05:45 PM | 4 | 2 | 6 | 134 | 1 | 135 | 2 | 257 | 259 | 400 |
| Total | 9 | 18 | 27 | 599 | 3 | 602 | 11 | 1084 | 1095 | 1724 |
| Grand Total | 14 | 26 | 40 | 1231 | 3 | 1234 | 27 | 1964 | 1991 | 3265 |
| Apprch % | 35 | 65 | | 99.8 | 0.2 | | 1.4 | 98.6 | | |
| Total % | 0.4 | 0.8 | 1.2 | 37.7 | 0.1 | 37.8 | 0.8 | 60.2 | 61 | |

| | Knollhaven Lane Southbound | | | Yucaipa Boulevard Westbound | | | Yucaipa Boulevard Eastbound | | | |
|---|---|---|---|---|---|---|---|---|---|---|
| Start Time | Left | Right | App. Total | Thru | Right | App. Total | Left | Thru | App. Total | Int. Total |
| Peak Hour Analysis From 04:00 PM to 05:45 PM - Peak 1 of 1 | | | | | | | | | | |
| Peak Hour for Entire Intersection Begins at 05:00 PM | | | | | | | | | | |
| 05:00 PM | 3 | 5 | **8** | 159 | **1** | 160 | 3 | 266 | 269 | 437 |
| 05:15 PM | 0 | **7** | 7 | 142 | 0 | 142 | **4** | **281** | **285** | 434 |
| 05:30 PM | 2 | 4 | 6 | **164** | 1 | **165** | 2 | 280 | 282 | **453** |
| 05:45 PM | **4** | 2 | 6 | 134 | 1 | 135 | 2 | 257 | 259 | 400 |
| Total Volume | 9 | 18 | 27 | 599 | 3 | 602 | 11 | 1084 | 1095 | 1724 |
| % App. Total | 33.3 | 66.7 | | 99.5 | 0.5 | | 1 | 99 | | |
| PHF | .563 | .643 | .844 | .913 | .750 | .912 | .688 | .964 | .961 | .951 |

Counts Unlimited
PO Box 1178
Corona, CA 92878
(951) 268-6268

City of Yucaipa
N/S: Knollhaven Lane
E/W: Yucaipa Boulevard
Weather: Clear

File Name : 04_YUC_Knollhaven_Yucaipa Blvd PM
Site Code : 20218899
Start Date : 12/4/2018
Page No : 2

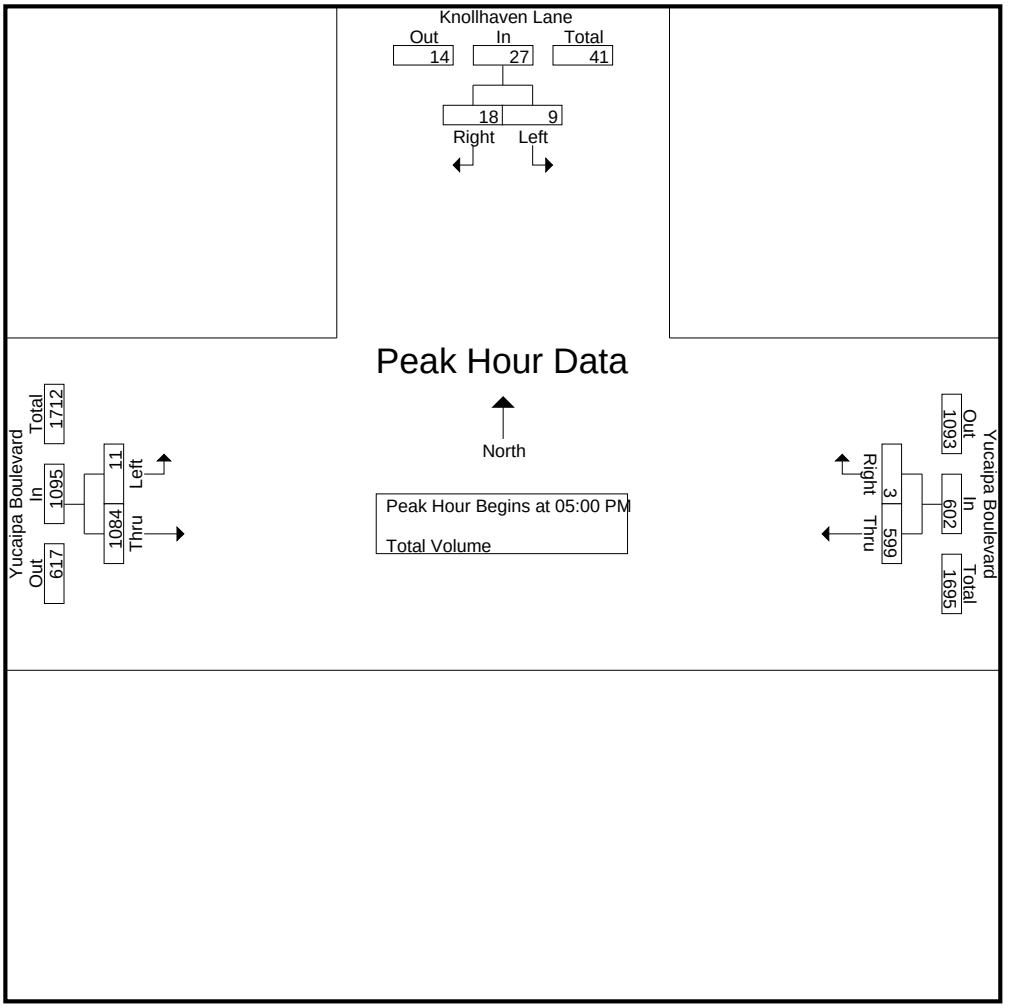


Peak Hour Analysis From 04:00 PM to 05:45 PM - Peak 1 of 1
Peak Hour for Each Approach Begins at:

| | 05:00 PM | | | 04:30 PM | | | 05:00 PM | | |
|---|---|---|---|---|---|---|---|---|---|
| +0 mins. | 3 | 5 | **8** | **191** | 0 | **191** | 3 | 266 | 269 |
| +15 mins. | 0 | **7** | 7 | 164 | 0 | 164 | **4** | **281** | **285** |
| +30 mins. | 2 | 4 | 6 | 159 | **1** | 160 | 2 | 280 | 282 |
| +45 mins. | **4** | 2 | 6 | 142 | 0 | 142 | 2 | 257 | 259 |
| Total Volume | 9 | 18 | 27 | 656 | 1 | 657 | 11 | 1084 | 1095 |
| % App. Total | 33.3 | 66.7 | | 99.8 | 0.2 | | 1 | 99 | |
| PHF | .563 | .643 | .844 | .859 | .250 | .860 | .688 | .964 | .961 |

Counts Unlimited
PO Box 1178
Corona, CA 92878
(951) 268-6268

City of Yucaipa
N/S: 18th Street
E/W: Yucaipa Boulevard
Weather: Clear

File Name : 05_YUC_18th_Yucaipa Blvd AM
Site Code : 20218899
Start Date : 12/4/2018
Page No : 1

Groups Printed- Total Volume

| | Yucaipa Boulevard Westbound | | | 18th Street Northbound | | | Yucaipa Boulevard Eastbound | | | |
|---|---|---|---|---|---|---|---|---|---|---|
| Start Time | Left | Thru | App. Total | Left | Right | App. Total | Thru | Right | App. Total | Int. Total |
| 07:00 AM | 0 | 134 | 134 | 3 | 2 | 5 | 100 | 0 | 100 | 239 |
| 07:15 AM | 0 | 135 | 135 | 0 | 0 | 0 | 113 | 0 | 113 | 248 |
| 07:30 AM | 0 | 140 | 140 | 0 | 1 | 1 | 106 | 0 | 106 | 247 |
| 07:45 AM | 0 | 166 | 166 | 0 | 0 | 0 | 121 | 1 | 122 | 288 |
| Total | 0 | 575 | 575 | 3 | 3 | 6 | 440 | 1 | 441 | 1022 |
| 08:00 AM | 0 | 153 | 153 | 1 | 0 | 1 | 103 | 0 | 103 | 257 |
| 08:15 AM | 0 | 140 | 140 | 0 | 0 | 0 | 126 | 0 | 126 | 266 |
| 08:30 AM | 1 | 127 | 128 | 0 | 1 | 1 | 125 | 0 | 125 | 254 |
| 08:45 AM | 0 | 141 | 141 | 1 | 0 | 1 | 141 | 0 | 141 | 283 |
| Total | 1 | 561 | 562 | 2 | 1 | 3 | 495 | 0 | 495 | 1060 |
| Grand Total | 1 | 1136 | 1137 | 5 | 4 | 9 | 935 | 1 | 936 | 2082 |
| Apprch % | 0.1 | 99.9 | | 55.6 | 44.4 | | 99.9 | 0.1 | | |
| Total % | 0 | 54.6 | 54.6 | 0.2 | 0.2 | 0.4 | 44.9 | 0 | 45 | |

| | Yucaipa Boulevard Westbound | | | 18th Street Northbound | | | Yucaipa Boulevard Eastbound | | | |
|---|---|---|---|---|---|---|---|---|---|---|
| Start Time | Left | Thru | App. Total | Left | Right | App. Total | Thru | Right | App. Total | Int. Total |
| Peak Hour Analysis From 07:00 AM to 08:45 AM - Peak 1 of 1 | | | | | | | | | | |
| Peak Hour for Entire Intersection Begins at 07:45 AM | | | | | | | | | | |
| 07:45 AM | 0 | **166** | **166** | 0 | 0 | 0 | 121 | **1** | 122 | **288** |
| 08:00 AM | 0 | 153 | 153 | **1** | 0 | **1** | 103 | 0 | 103 | 257 |
| 08:15 AM | 0 | 140 | 140 | 0 | 0 | 0 | **126** | 0 | **126** | 266 |
| 08:30 AM | **1** | 127 | 128 | 0 | **1** | 1 | 125 | 0 | 125 | 254 |
| Total Volume | 1 | 586 | 587 | 1 | 1 | 2 | 475 | 1 | 476 | 1065 |
| % App. Total | 0.2 | 99.8 | | 50 | 50 | | 99.8 | 0.2 | | |
| PHF | .250 | .883 | .884 | .250 | .250 | .500 | .942 | .250 | .944 | .924 |

Counts Unlimited
PO Box 1178
Corona, CA 92878
(951) 268-6268

City of Yucaipa
N/S: 18th Street
E/W: Yucaipa Boulevard
Weather: Clear

File Name : 05_YUC_18th_Yucaipa Blvd AM
Site Code : 20218899
Start Date : 12/4/2018
Page No : 2

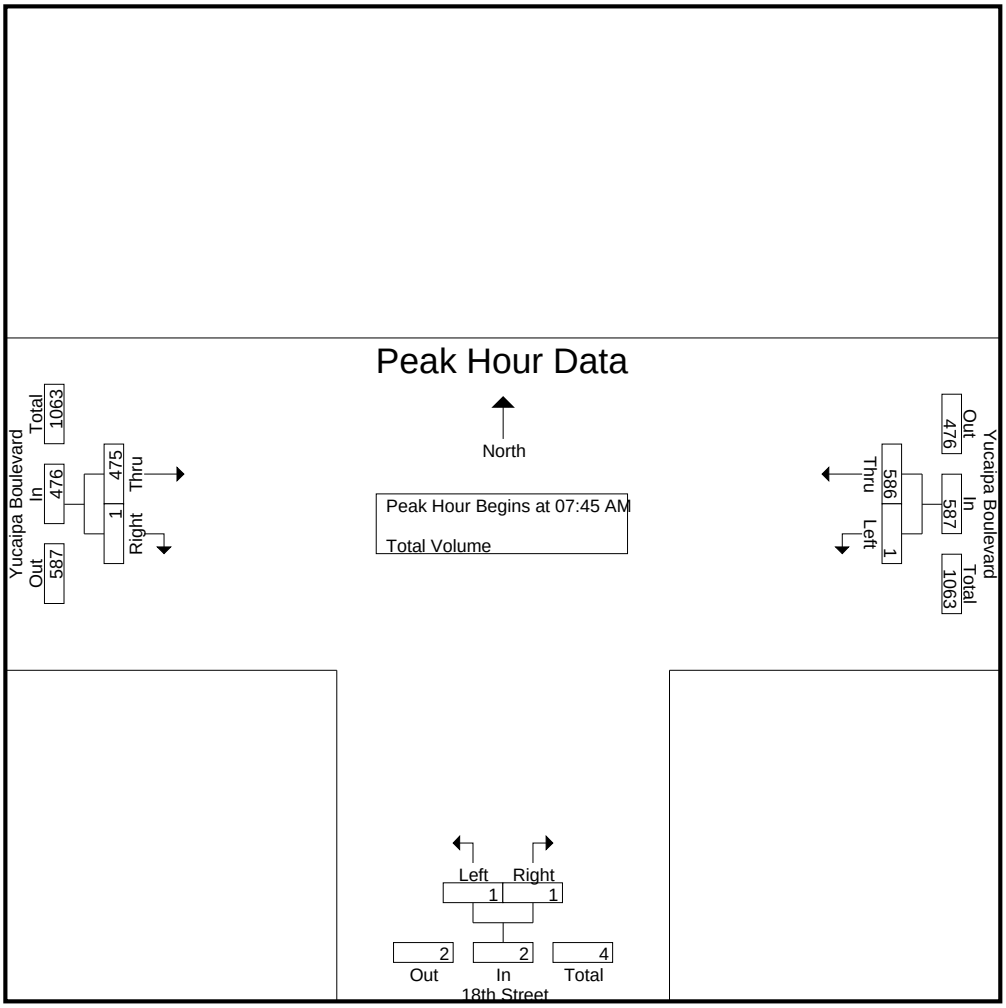


Peak Hour Analysis From 07:00 AM to 08:45 AM - Peak 1 of 1
Peak Hour for Each Approach Begins at:

| | 07:30 AM | | | 07:00 AM | | | 08:00 AM | | |
|---|---|---|---|---|---|---|---|---|---|
| +0 mins. | 0 | 140 | 140 | **3** | **2** | **5** | 103 | 0 | 103 |
| +15 mins. | 0 | **166** | **166** | 0 | 0 | 0 | 126 | 0 | 126 |
| +30 mins. | 0 | 153 | 153 | 0 | 1 | 1 | 125 | 0 | 125 |
| +45 mins. | 0 | 140 | 140 | 0 | 0 | 0 | **141** | 0 | **141** |
| Total Volume | 0 | 599 | 599 | 3 | 3 | 6 | 495 | 0 | 495 |
| % App. Total | 0 | 100 | | 50 | 50 | | 100 | 0 | |
| PHF | .000 | .902 | .902 | .250 | .375 | .300 | .878 | .000 | .878 |

Counts Unlimited
PO Box 1178
Corona, CA 92878
(951) 268-6268

City of Yucaipa
N/S: 18th Street
E/W: Yucaipa Boulevard
Weather: Clear

File Name : 05_YUC_18th_Yucaipa Blvd PM
Site Code : 20218899
Start Date : 12/4/2018
Page No : 1

Groups Printed- Total Volume

| | Yucaipa Boulevard Westbound | | | 18th Street Northbound | | | Yucaipa Boulevard Eastbound | | | |
|---|---|---|---|---|---|---|---|---|---|---|
| Start Time | Left | Thru | App. Total | Left | Right | App. Total | Thru | Right | App. Total | Int. Total |
| 04:00 PM | 0 | 144 | 144 | 1 | 0 | 1 | 208 | 0 | 208 | 353 |
| 04:15 PM | 0 | 147 | 147 | 0 | 0 | 0 | 230 | 0 | 230 | 377 |
| 04:30 PM | 0 | 185 | 185 | 0 | 0 | 0 | 229 | 0 | 229 | 414 |
| 04:45 PM | 0 | 161 | 161 | 0 | 0 | 0 | 206 | 0 | 206 | 367 |
| Total | 0 | 637 | 637 | 1 | 0 | 1 | 873 | 0 | 873 | 1511 |
| 05:00 PM | 0 | 167 | 167 | 0 | 0 | 0 | 281 | 0 | 281 | 448 |
| 05:15 PM | 0 | 161 | 161 | 0 | 0 | 0 | 254 | 0 | 254 | 415 |
| 05:30 PM | 0 | 146 | 146 | 0 | 0 | 0 | 249 | 0 | 249 | 395 |
| 05:45 PM | 0 | 130 | 130 | 0 | 0 | 0 | 242 | 0 | 242 | 372 |
| Total | 0 | 604 | 604 | 0 | 0 | 0 | 1026 | 0 | 1026 | 1630 |
| Grand Total | 0 | 1241 | 1241 | 1 | 0 | 1 | 1899 | 0 | 1899 | 3141 |
| Apprch % | 0 | 100 | | 100 | 0 | | 100 | 0 | | |
| Total % | 0 | 39.5 | 39.5 | 0 | 0 | 0 | 60.5 | 0 | 60.5 | |

| | Yucaipa Boulevard Westbound | | | 18th Street Northbound | | | Yucaipa Boulevard Eastbound | | | |
|---|---|---|---|---|---|---|---|---|---|---|
| Start Time | Left | Thru | App. Total | Left | Right | App. Total | Thru | Right | App. Total | Int. Total |
| Peak Hour Analysis From 04:00 PM to 05:45 PM - Peak 1 of 1 | | | | | | | | | | |
| Peak Hour for Entire Intersection Begins at 04:30 PM | | | | | | | | | | |
| 04:30 PM | 0 | **185** | **185** | 0 | 0 | 0 | 229 | 0 | 229 | 414 |
| 04:45 PM | 0 | 161 | 161 | 0 | 0 | 0 | 206 | 0 | 206 | 367 |
| 05:00 PM | 0 | 167 | 167 | 0 | 0 | 0 | **281** | 0 | **281** | **448** |
| 05:15 PM | 0 | 161 | 161 | 0 | 0 | 0 | 254 | 0 | 254 | 415 |
| Total Volume | 0 | 674 | 674 | 0 | 0 | 0 | 970 | 0 | 970 | 1644 |
| % App. Total | 0 | 100 | | 0 | 0 | | 100 | 0 | | |
| PHF | .000 | .911 | .911 | .000 | .000 | .000 | .863 | .000 | .863 | .917 |

Counts Unlimited
PO Box 1178
Corona, CA 92878
(951) 268-6268

City of Yucaipa
N/S: 18th Street
E/W: Yucaipa Boulevard
Weather: Clear

File Name : 05_YUC_18th_Yucaipa Blvd PM
Site Code : 20218899
Start Date : 12/4/2018
Page No : 2

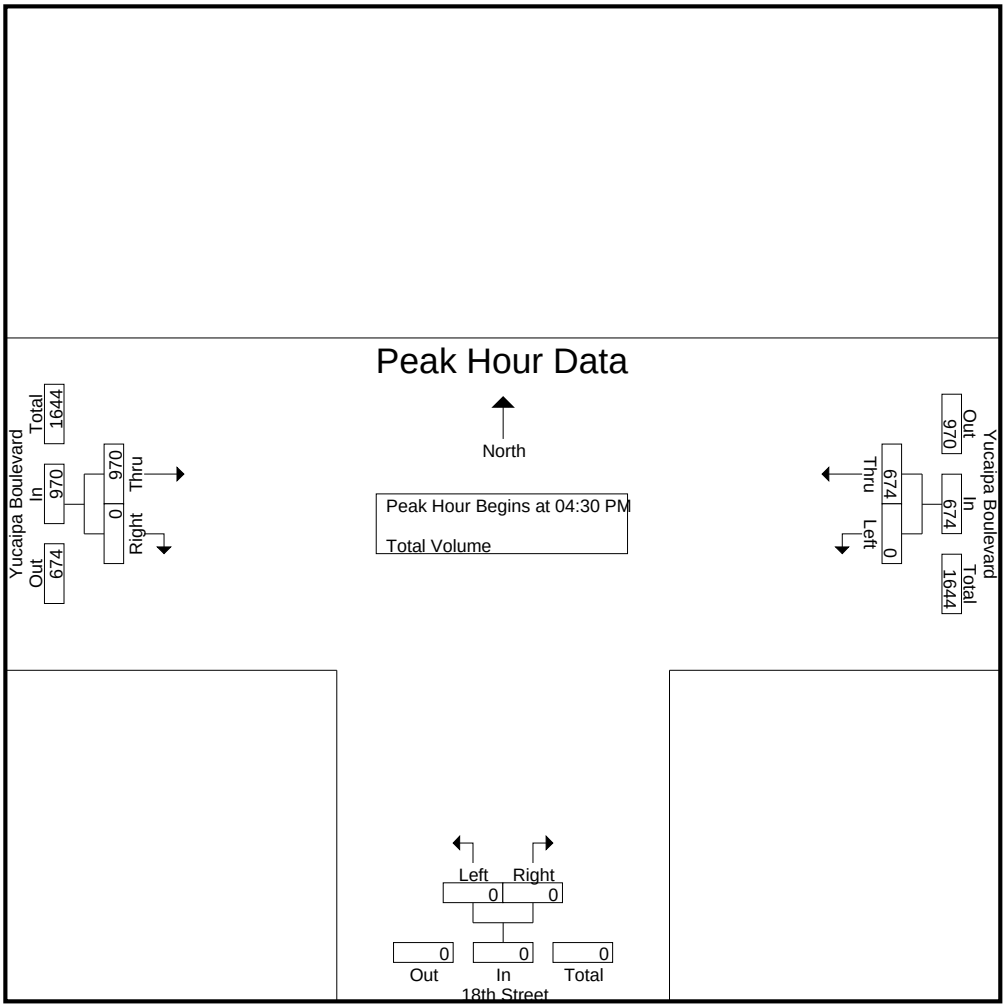


Peak Hour Analysis From 04:00 PM to 05:45 PM - Peak 1 of 1
Peak Hour for Each Approach Begins at:

| | 04:30 PM | | | 04:00 PM | | | 05:00 PM | | |
|---|---|---|---|---|---|---|---|---|---|
| +0 mins. | 0 | **185** | **185** | **1** | 0 | **1** | **281** | 0 | **281** |
| +15 mins. | 0 | 161 | 161 | 0 | 0 | 0 | 254 | 0 | 254 |
| +30 mins. | 0 | 167 | 167 | 0 | 0 | 0 | 249 | 0 | 249 |
| +45 mins. | 0 | 161 | 161 | 0 | 0 | 0 | 242 | 0 | 242 |
| Total Volume | 0 | 674 | 674 | 1 | 0 | 1 | 1026 | 0 | 1026 |
| % App. Total | 0 | 100 | | 100 | 0 | | 100 | 0 | |
| PHF | .000 | .911 | .911 | .250 | .000 | .250 | .913 | .000 | .913 |

Counts Unlimited
PO Box 1178
Corona, CA 92878
(951) 268-6268

City of Yucaipa
N/S: Avenue E/Dunlap Boulevard
E/W: Avenue E
Weather: Clear

File Name : 06_YUC_Ave E_Dunlap AM
Site Code : 20218899
Start Date : 12/4/2018
Page No : 1

Groups Printed- Total Volume

| | Avenue E Southbound | | | Dunlap Boulevard Northbound | | | Avenue E Eastbound | | | |
|---|---|---|---|---|---|---|---|---|---|---|
| Start Time | Thru | Right | App. Total | Left | Thru | App. Total | Left | Right | App. Total | Int. Total |
| 07:00 AM | 4 | 7 | 11 | 0 | 28 | 28 | 18 | 0 | 18 | 57 |
| 07:15 AM | 8 | 8 | 16 | 1 | 25 | 26 | 3 | 0 | 3 | 45 |
| 07:30 AM | 7 | 10 | 17 | 2 | 32 | 34 | 6 | 0 | 6 | 57 |
| 07:45 AM | 8 | 13 | 21 | 2 | 27 | 29 | 7 | 0 | 7 | 57 |
| Total | 27 | 38 | 65 | 5 | 112 | 117 | 34 | 0 | 34 | 216 |
| 08:00 AM | 9 | 9 | 18 | 0 | 25 | 25 | 10 | 0 | 10 | 53 |
| 08:15 AM | 8 | 4 | 12 | 4 | 31 | 35 | 10 | 0 | 10 | 57 |
| 08:30 AM | 6 | 4 | 10 | 1 | 14 | 15 | 11 | 0 | 11 | 36 |
| 08:45 AM | 16 | 8 | 24 | 0 | 17 | 17 | 9 | 0 | 9 | 50 |
| Total | 39 | 25 | 64 | 5 | 87 | 92 | 40 | 0 | 40 | 196 |
| Grand Total | 66 | 63 | 129 | 10 | 199 | 209 | 74 | 0 | 74 | 412 |
| Apprch % | 51.2 | 48.8 | | 4.8 | 95.2 | | 100 | 0 | | |
| Total % | 16 | 15.3 | 31.3 | 2.4 | 48.3 | 50.7 | 18 | 0 | 18 | |

| | Avenue E Southbound | | | Dunlap Boulevard Northbound | | | Avenue E Eastbound | | | |
|---|---|---|---|---|---|---|---|---|---|---|
| Start Time | Thru | Right | App. Total | Left | Thru | App. Total | Left | Right | App. Total | Int. Total |
| Peak Hour Analysis From 07:00 AM to 08:45 AM - Peak 1 of 1 | | | | | | | | | | |
| Peak Hour for Entire Intersection Begins at 07:30 AM | | | | | | | | | | |
| 07:30 AM | 7 | 10 | 17 | 2 | **32** | 34 | 6 | 0 | 6 | **57** |
| 07:45 AM | 8 | **13** | **21** | 2 | 27 | 29 | 7 | 0 | 7 | 57 |
| 08:00 AM | **9** | 9 | 18 | 0 | 25 | 25 | **10** | 0 | **10** | 53 |
| 08:15 AM | 8 | 4 | 12 | **4** | 31 | **35** | 10 | 0 | 10 | 57 |
| Total Volume | 32 | 36 | 68 | 8 | 115 | 123 | 33 | 0 | 33 | 224 |
| % App. Total | 47.1 | 52.9 | | 6.5 | 93.5 | | 100 | 0 | | |
| PHF | .889 | .692 | .810 | .500 | .898 | .879 | .825 | .000 | .825 | .982 |

Counts Unlimited
PO Box 1178
Corona, CA 92878
(951) 268-6268

City of Yucaipa
N/S: Avenue E/Dunlap Boulevard
E/W: Avenue E
Weather: Clear

File Name : 06_YUC_Ave E_Dunlap AM
Site Code : 20218899
Start Date : 12/4/2018
Page No : 2

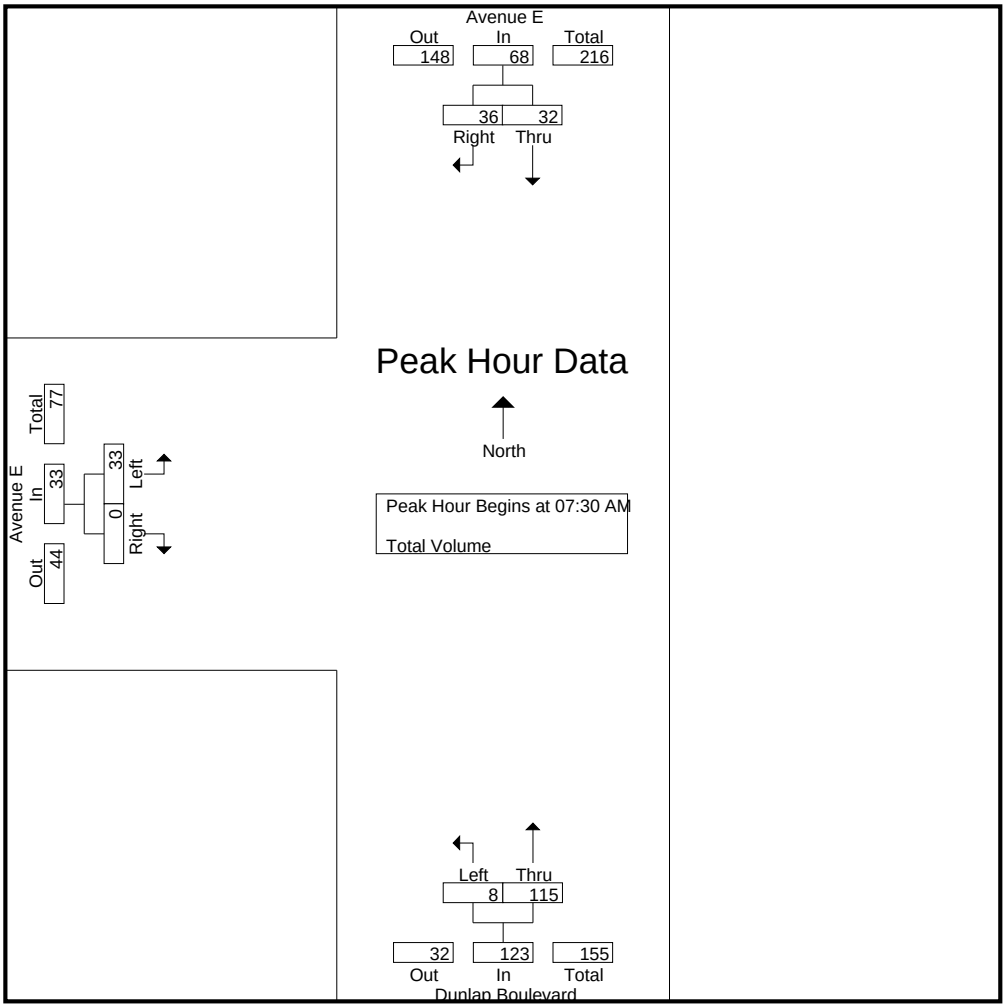


Peak Hour Analysis From 07:00 AM to 08:45 AM - Peak 1 of 1
Peak Hour for Each Approach Begins at:

| | 07:15 AM | | | 07:30 AM | | | 08:00 AM | | |
|---|---|---|---|---|---|---|---|---|---|
| +0 mins. | 8 | 8 | 16 | 2 | **32** | 34 | 10 | 0 | 10 |
| +15 mins. | 7 | 10 | 17 | 2 | 27 | 29 | 10 | 0 | 10 |
| +30 mins. | 8 | **13** | **21** | 0 | 25 | 25 | **11** | 0 | **11** |
| +45 mins. | **9** | 9 | 18 | **4** | 31 | **35** | 9 | 0 | 9 |
| Total Volume | 32 | 40 | 72 | 8 | 115 | 123 | 40 | 0 | 40 |
| % App. Total | 44.4 | 55.6 | | 6.5 | 93.5 | | 100 | 0 | |
| PHF | .889 | .769 | .857 | .500 | .898 | .879 | .909 | .000 | .909 |

Counts Unlimited
PO Box 1178
Corona, CA 92878
(951) 268-6268

City of Yucaipa
N/S: Avenue E/Dunlap Boulevard
E/W: Avenue E
Weather: Clear

File Name : 06_YUC_Ave E_Dunlap PM
Site Code : 20218899
Start Date : 12/4/2018
Page No : 1

Groups Printed- Total Volume

| | Avenue E Southbound | | | Dunlap Boulevard Northbound | | | Avenue E Eastbound | | | |
|---|---|---|---|---|---|---|---|---|---|---|
| Start Time | Thru | Right | App. Total | Left | Thru | App. Total | Left | Right | App. Total | Int. Total |
| 04:00 PM | 27 | 4 | 31 | 1 | 22 | 23 | 21 | 2 | 23 | 77 |
| 04:15 PM | 32 | 8 | 40 | 0 | 16 | 16 | 14 | 2 | 16 | 72 |
| 04:30 PM | 33 | 8 | 41 | 0 | 12 | 12 | 35 | 0 | 35 | 88 |
| 04:45 PM | 21 | 10 | 31 | 0 | 17 | 17 | 17 | 3 | 20 | 68 |
| Total | 113 | 30 | 143 | 1 | 67 | 68 | 87 | 7 | 94 | 305 |
| 05:00 PM | 29 | 7 | 36 | 0 | 23 | 23 | 20 | 4 | 24 | 83 |
| 05:15 PM | 25 | 10 | 35 | 0 | 5 | 5 | 13 | 2 | 15 | 55 |
| 05:30 PM | 21 | 7 | 28 | 0 | 11 | 11 | 15 | 1 | 16 | 55 |
| 05:45 PM | 23 | 9 | 32 | 0 | 14 | 14 | 3 | 0 | 3 | 49 |
| Total | 98 | 33 | 131 | 0 | 53 | 53 | 51 | 7 | 58 | 242 |
| Grand Total | 211 | 63 | 274 | 1 | 120 | 121 | 138 | 14 | 152 | 547 |
| Apprch % | 77 | 23 | | 0.8 | 99.2 | | 90.8 | 9.2 | | |
| Total % | 38.6 | 11.5 | 50.1 | 0.2 | 21.9 | 22.1 | 25.2 | 2.6 | 27.8 | |

| | Avenue E Southbound | | | Dunlap Boulevard Northbound | | | Avenue E Eastbound | | | |
|---|---|---|---|---|---|---|---|---|---|---|
| Start Time | Thru | Right | App. Total | Left | Thru | App. Total | Left | Right | App. Total | Int. Total |
| Peak Hour Analysis From 04:00 PM to 05:45 PM - Peak 1 of 1 | | | | | | | | | | |
| Peak Hour for Entire Intersection Begins at 04:15 PM | | | | | | | | | | |
| 04:15 PM | 32 | 8 | 40 | 0 | 16 | 16 | 14 | 2 | 16 | 72 |
| 04:30 PM | **33** | 8 | **41** | 0 | 12 | 12 | **35** | 0 | **35** | **88** |
| 04:45 PM | 21 | **10** | 31 | 0 | 17 | 17 | 17 | 3 | 20 | 68 |
| 05:00 PM | 29 | 7 | 36 | 0 | **23** | **23** | 20 | **4** | 24 | 83 |
| Total Volume | 115 | 33 | 148 | 0 | 68 | 68 | 86 | 9 | 95 | 311 |
| % App. Total | 77.7 | 22.3 | | 0 | 100 | | 90.5 | 9.5 | | |
| PHF | .871 | .825 | .902 | .000 | .739 | .739 | .614 | .563 | .679 | .884 |

Counts Unlimited
PO Box 1178
Corona, CA 92878
(951) 268-6268

City of Yucaipa
N/S: Avenue E/Dunlap Boulevard
E/W: Avenue E
Weather: Clear

File Name : 06_YUC_Ave E_Dunlap PM
Site Code : 20218899
Start Date : 12/4/2018
Page No : 2

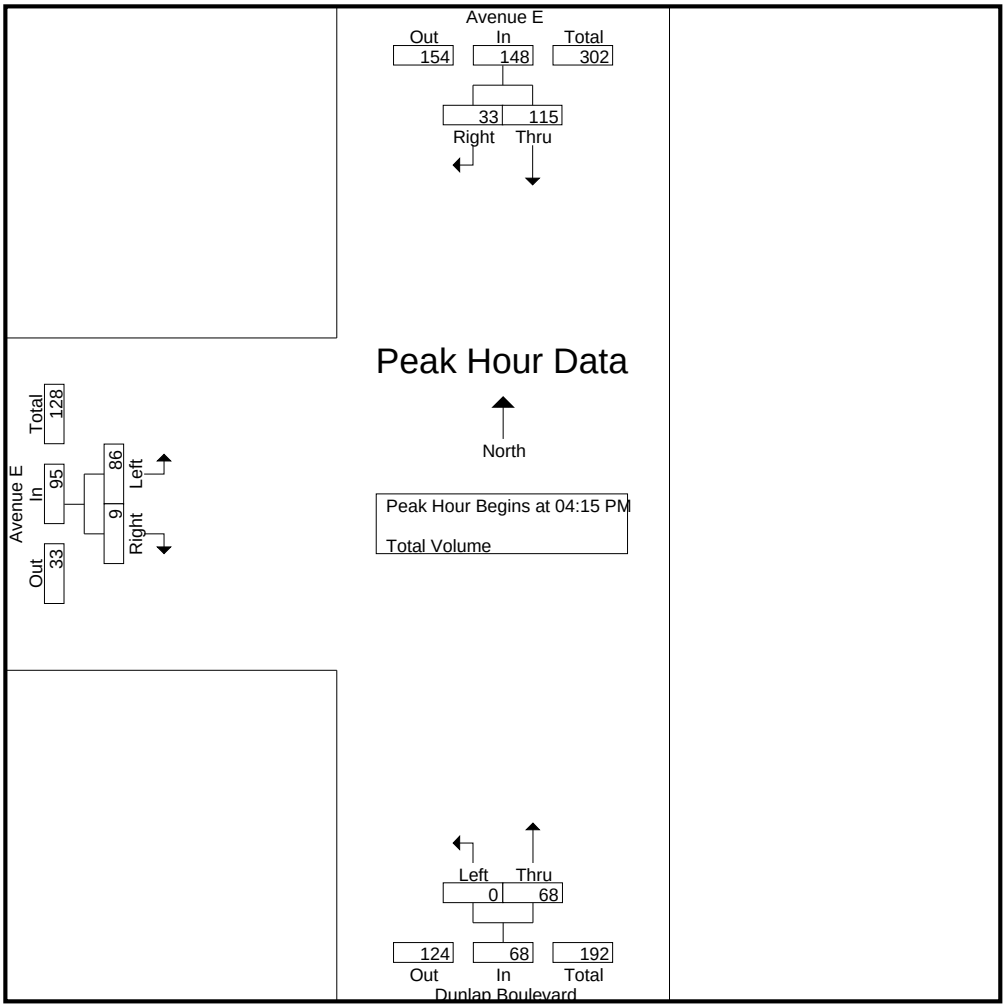


Peak Hour Analysis From 04:00 PM to 05:45 PM - Peak 1 of 1
Peak Hour for Each Approach Begins at:

| | 04:15 PM | | | 04:00 PM | | | 04:15 PM | | |
|---|---|---|---|---|---|---|---|---|---|
| +0 mins. | 32 | 8 | 40 | **1** | **22** | **23** | 14 | 2 | 16 |
| +15 mins. | **33** | 8 | **41** | 0 | 16 | 16 | **35** | 0 | **35** |
| +30 mins. | 21 | **10** | 31 | 0 | 12 | 12 | 17 | 3 | 20 |
| +45 mins. | 29 | 7 | 36 | 0 | 17 | 17 | 20 | **4** | 24 |
| Total Volume | 115 | 33 | 148 | 1 | 67 | 68 | 86 | 9 | 95 |
| % App. Total | 77.7 | 22.3 | | 1.5 | 98.5 | | 90.5 | 9.5 | |
| PHF | .871 | .825 | .902 | .250 | .761 | .739 | .614 | .563 | .679 |

# Counts Unlimited, Inc.

PO Box 1178
Corona, CA 92878
Phone: 951-268-6268
email: counts@countsunlimited.com

City of Yucaipa
Yucaipa Boulevard
B/ Interstate 10 Westbound - Avenue E
24 Hour Directional Volume Count

YUC001
Site Code: 202-18899

| Start Time | 04-Dec-18 Tue | Northbound Morning | Northbound Afternoon | Hour Totals Morning | Hour Totals Afternoon | Southbound Morning | Southbound Afternoon | Hour Totals Morning | Hour Totals Afternoon | Combined Totals Morning | Combined Totals Afternoon |
|---|---|---|---|---|---|---|---|---|---|---|---|
| 12:00 | | 23 | 169 | | | 18 | 181 | | | | |
| 12:15 | | 19 | 181 | | | 12 | 185 | | | | |
| 12:30 | | 17 | 212 | | | 16 | 177 | | | | |
| 12:45 | | 7 | 187 | 66 | 749 | 15 | 161 | 61 | 704 | 127 | 1453 |
| 01:00 | | 6 | 204 | | | 11 | 169 | | | | |
| 01:15 | | 3 | 166 | | | 6 | 194 | | | | |
| 01:30 | | 3 | 200 | | | 12 | 168 | | | | |
| 01:45 | | 3 | 215 | 15 | 785 | 10 | 148 | 39 | 679 | 54 | 1464 |
| 02:00 | | 2 | 206 | | | 11 | 175 | | | | |
| 02:15 | | 7 | 216 | | | 9 | 166 | | | | |
| 02:30 | | 4 | 246 | | | 11 | 166 | | | | |
| 02:45 | | 3 | 241 | 16 | 909 | 8 | **178** | 39 | 685 | 55 | 1594 |
| 03:00 | | 5 | 216 | | | 15 | **212** | | | | |
| 03:15 | | 10 | 237 | | | 20 | **208** | | | | |
| 03:30 | | 9 | 234 | | | 33 | **206** | | | | |
| 03:45 | | 7 | 225 | 31 | 912 | 36 | 177 | 104 | 803 | 135 | 1715 |
| 04:00 | | 13 | 273 | | | 38 | 163 | | | | |
| 04:15 | | 14 | 282 | | | 42 | 153 | | | | |
| 04:30 | | 16 | 292 | | | 65 | 197 | | | | |
| 04:45 | | 49 | 291 | 92 | 1138 | 58 | 182 | 203 | 695 | 295 | 1833 |
| 05:00 | | 43 | **315** | | | 59 | 178 | | | | |
| 05:15 | | 33 | **330** | | | 85 | 168 | | | | |
| 05:30 | | 47 | **322** | | | 104 | 186 | | | | |
| 05:45 | | 76 | **302** | 199 | 1269 | 113 | 157 | 361 | 689 | 560 | 1958 |
| 06:00 | | 68 | 259 | | | 147 | 122 | | | | |
| 06:15 | | 95 | 306 | | | 153 | 131 | | | | |
| 06:30 | | 113 | 254 | | | 181 | 146 | | | | |
| 06:45 | | 118 | 228 | 394 | 1047 | 165 | 125 | 646 | 524 | 1040 | 1571 |
| 07:00 | | 131 | 191 | | | 137 | 116 | | | | |
| 07:15 | | 132 | 186 | | | 155 | 116 | | | | |
| 07:30 | | 143 | 179 | | | 165 | 108 | | | | |
| 07:45 | | 154 | 169 | 560 | 725 | 169 | 115 | 626 | 455 | 1186 | 1180 |
| 08:00 | | 161 | 152 | | | 148 | 125 | | | | |
| 08:15 | | 163 | 146 | | | 170 | 76 | | | | |
| 08:30 | | 168 | 139 | | | 153 | 79 | | | | |
| 08:45 | | 178 | 129 | 670 | 566 | 153 | 73 | 624 | 353 | 1294 | 919 |
| 09:00 | | 147 | 116 | | | 165 | 99 | | | | |
| 09:15 | | 129 | 106 | | | 166 | 82 | | | | |
| 09:30 | | 145 | 98 | | | 139 | 54 | | | | |
| 09:45 | | 173 | 79 | 594 | 399 | 155 | 56 | 625 | 291 | 1219 | 690 |
| 10:00 | | 142 | 64 | | | 173 | 39 | | | | |
| 10:15 | | 153 | 74 | | | 164 | 43 | | | | |
| 10:30 | | 162 | 49 | | | 146 | 38 | | | | |
| 10:45 | | 177 | 39 | 634 | 226 | 149 | 25 | 632 | 145 | 1266 | 371 |
| 11:00 | | **179** | 24 | | | **178** | 37 | | | | |
| 11:15 | | **167** | 31 | | | **177** | 19 | | | | |
| 11:30 | | **175** | 20 | | | **202** | 28 | | | | |
| 11:45 | | **179** | 29 | 700 | 104 | **167** | 27 | 724 | 111 | 1424 | 215 |
| Total | | 3971 | 8829 | 3971 | 8829 | 4684 | 6134 | 4684 | 6134 | 8655 | 14963 |
| Combined Total | | 12800 | | 12800 | | 10818 | | 10818 | | 23618 | |
| AM Peak | - | 11:00 | - | - | - | 11:00 | - | - | - | - | - |
| Vol. | - | 700 | - | - | - | 724 | - | - | - | - | - |
| P.H.F. | | 0.978 | | | | 0.896 | | | | | |
| PM Peak | - | - | 05:00 | - | - | - | 02:45 | - | - | - | - |
| Vol. | - | - | 1269 | - | - | - | 804 | - | - | - | - |
| P.H.F. | | | 0.961 | | | | 0.948 | | | | |
| Percentage | | 31.0% | 69.0% | | | 43.3% | 56.7% | | | | |
| ADT/AADT | | ADT 23,618 | | AADT 23,618 | | | | | | | |

# Counts Unlimited, Inc.

PO Box 1178
Corona, CA 92878
Phone: 951-268-6268
email: counts@countsunlimited.com

City of Yucaipa
Yucaipa Boulevard
B/ Avenue E - 18th Street
24 Hour Directional Volume Count

YUC002
Site Code: 202-18899

| Start Time | 04-Dec-18 Tue | Northbound Morning | Northbound Afternoon | Hour Totals Morning | Hour Totals Afternoon | Southbound Morning | Southbound Afternoon | Hour Totals Morning | Hour Totals Afternoon | Combined Totals Morning | Combined Totals Afternoon |
|---|---|---|---|---|---|---|---|---|---|---|---|
| 12:00 | | 15 | 146 | | | 11 | 149 | | | | |
| 12:15 | | 14 | 154 | | | 3 | 161 | | | | |
| 12:30 | | 14 | 202 | | | 11 | 157 | | | | |
| 12:45 | | 7 | 177 | 50 | 679 | 11 | 137 | 36 | 604 | 86 | 1283 |
| 01:00 | | 9 | 180 | | | 8 | 127 | | | | |
| 01:15 | | 2 | 158 | | | 4 | 153 | | | | |
| 01:30 | | 2 | 168 | | | 4 | 150 | | | | |
| 01:45 | | 2 | 186 | 15 | 692 | 7 | 115 | 23 | 545 | 38 | 1237 |
| 02:00 | | 3 | 193 | | | 5 | 155 | | | | |
| 02:15 | | 3 | 196 | | | 6 | 138 | | | | |
| 02:30 | | 1 | 246 | | | 11 | 137 | | | | |
| 02:45 | | 6 | 225 | 13 | 860 | 9 | 142 | 31 | 572 | 44 | 1432 |
| 03:00 | | 2 | 196 | | | 13 | **183** | | | | |
| 03:15 | | 4 | 212 | | | 20 | **166** | | | | |
| 03:30 | | 4 | 208 | | | 33 | **149** | | | | |
| 03:45 | | 12 | 197 | 22 | 813 | 43 | **148** | 109 | 646 | 131 | 1459 |
| 04:00 | | 13 | 255 | | | 39 | 137 | | | | |
| 04:15 | | 21 | 258 | | | 47 | 117 | | | | |
| 04:30 | | 31 | 236 | | | 65 | 167 | | | | |
| 04:45 | | 47 | **255** | 112 | 1004 | 59 | 147 | 210 | 568 | 322 | 1572 |
| 05:00 | | 48 | **273** | | | 55 | 143 | | | | |
| 05:15 | | 45 | **287** | | | 86 | 143 | | | | |
| 05:30 | | 50 | **264** | | | 93 | 159 | | | | |
| 05:45 | | 67 | 249 | 210 | 1073 | 93 | 133 | 327 | 578 | 537 | 1651 |
| 06:00 | | 63 | 225 | | | 138 | 111 | | | | |
| 06:15 | | 100 | 256 | | | 149 | 121 | | | | |
| 06:30 | | 131 | 225 | | | 166 | 126 | | | | |
| 06:45 | | 107 | 193 | 401 | 899 | 141 | 92 | 594 | 450 | 995 | 1349 |
| 07:00 | | 138 | 158 | | | 101 | 97 | | | | |
| 07:15 | | 129 | 146 | | | 122 | 100 | | | | |
| 07:30 | | 127 | 148 | | | 133 | 91 | | | | |
| 07:45 | | 151 | 132 | 545 | 584 | 152 | 86 | 508 | 374 | 1053 | 958 |
| 08:00 | | 132 | 136 | | | 130 | 113 | | | | |
| 08:15 | | 169 | 131 | | | 139 | 76 | | | | |
| 08:30 | | 143 | 120 | | | 124 | 66 | | | | |
| 08:45 | | 148 | 104 | 592 | 491 | 127 | 55 | 520 | 310 | 1112 | 801 |
| 09:00 | | 131 | 98 | | | 147 | 89 | | | | |
| 09:15 | | 126 | 80 | | | 135 | 70 | | | | |
| 09:30 | | 144 | 85 | | | 137 | 43 | | | | |
| 09:45 | | **174** | 65 | 575 | 328 | 155 | 37 | 574 | 239 | 1149 | 567 |
| 10:00 | | **167** | 55 | | | 157 | 31 | | | | |
| 10:15 | | **147** | 65 | | | 155 | 33 | | | | |
| 10:30 | | **158** | 43 | | | 115 | 23 | | | | |
| 10:45 | | 152 | 36 | 624 | 199 | 130 | 18 | 557 | 105 | 1181 | 304 |
| 11:00 | | 163 | 17 | | | **148** | 25 | | | | |
| 11:15 | | 151 | 21 | | | **150** | 17 | | | | |
| 11:30 | | 164 | 17 | | | **179** | 23 | | | | |
| 11:45 | | 151 | 17 | 629 | 72 | **142** | 18 | 619 | 83 | 1248 | 155 |
| Total | | 3788 | 7694 | 3788 | 7694 | 4108 | 5074 | 4108 | 5074 | 7896 | 12768 |
| Combined Total | | 11482 | | 11482 | | 9182 | | 9182 | | 20664 | |
| AM Peak | - | 09:45 | - | - | - | 11:00 | - | - | - | - | - |
| Vol. | - | 646 | - | - | - | 619 | - | - | - | - | - |
| P.H.F. | | 0.928 | | | | 0.865 | | | | | |
| PM Peak | - | - | 04:45 | - | - | - | 03:00 | - | - | - | - |
| Vol. | - | - | 1079 | - | - | - | 646 | - | - | - | - |
| P.H.F. | | | 0.940 | | | | 0.883 | | | | |
| Percentage | | 33.0% | 67.0% | | | 44.7% | 55.3% | | | | |
| ADT/AADT | | ADT 20,664 | | AADT 20,664 | | | | | | | |

# Counts Unlimited, Inc.

PO Box 1178
Corona, CA 92878
Phone: 951-268-6268
email: counts@countsunlimited.com

City of Yucaipa
Yucaipa Boulevard
B/ 18th Street - 17th Street
24 Hour Directional Volume Count

YUC003
Site Code: 202-18899

| Start Time | 04-Dec-18 Tue | Eastbound Morning | Eastbound Afternoon | Hour Totals Morning | Hour Totals Afternoon | Westbound Morning | Westbound Afternoon | Hour Totals Morning | Hour Totals Afternoon | Combined Totals Morning | Combined Totals Afternoon |
|---|---|---|---|---|---|---|---|---|---|---|---|
| 12:00 | | 15 | 135 | | | 9 | 164 | | | | |
| 12:15 | | 18 | 137 | | | 15 | 166 | | | | |
| 12:30 | | 15 | 165 | | | 11 | 154 | | | | |
| 12:45 | | 4 | 152 | 52 | 589 | 10 | 158 | 45 | 642 | 97 | 1231 |
| 01:00 | | 6 | 157 | | | 8 | 136 | | | | |
| 01:15 | | 3 | 128 | | | 6 | 160 | | | | |
| 01:30 | | 2 | 151 | | | 3 | 139 | | | | |
| 01:45 | | 4 | 164 | 15 | 600 | 6 | 133 | 23 | 568 | 38 | 1168 |
| 02:00 | | 0 | 152 | | | 6 | 168 | | | | |
| 02:15 | | 3 | 198 | | | 5 | 162 | | | | |
| 02:30 | | 0 | 211 | | | 12 | 163 | | | | |
| 02:45 | | 1 | 192 | 4 | 753 | 12 | **168** | 35 | 661 | 39 | 1414 |
| 03:00 | | 1 | 176 | | | 16 | **217** | | | | |
| 03:15 | | 2 | 192 | | | 20 | **181** | | | | |
| 03:30 | | 1 | 182 | | | 34 | **168** | | | | |
| 03:45 | | 0 | 181 | 4 | 731 | 47 | 154 | 117 | 720 | 121 | 1451 |
| 04:00 | | 2 | 208 | | | 38 | 144 | | | | |
| 04:15 | | 4 | 230 | | | 51 | 147 | | | | |
| 04:30 | | 5 | 229 | | | 73 | 185 | | | | |
| 04:45 | | 24 | 206 | 35 | 873 | 60 | 161 | 222 | 637 | 257 | 1510 |
| 05:00 | | 29 | **281** | | | 70 | 167 | | | | |
| 05:15 | | 22 | **254** | | | 93 | 161 | | | | |
| 05:30 | | 29 | **249** | | | 104 | 146 | | | | |
| 05:45 | | 43 | **242** | 123 | 1026 | 105 | 130 | 372 | 604 | 495 | 1630 |
| 06:00 | | 26 | 219 | | | 142 | 131 | | | | |
| 06:15 | | 49 | 255 | | | 153 | 142 | | | | |
| 06:30 | | 62 | 218 | | | 179 | 141 | | | | |
| 06:45 | | 77 | 203 | 214 | 895 | 147 | 98 | 621 | 512 | 835 | 1407 |
| 07:00 | | 102 | 173 | | | 134 | 112 | | | | |
| 07:15 | | 113 | 149 | | | 135 | 102 | | | | |
| 07:30 | | 107 | 147 | | | 140 | 90 | | | | |
| 07:45 | | 121 | 124 | 443 | 593 | 166 | 85 | 575 | 389 | 1018 | 982 |
| 08:00 | | 103 | 137 | | | 153 | 121 | | | | |
| 08:15 | | 126 | 121 | | | 140 | 80 | | | | |
| 08:30 | | 126 | 103 | | | 128 | 66 | | | | |
| 08:45 | | 141 | 98 | 496 | 459 | 141 | 58 | 562 | 325 | 1058 | 784 |
| 09:00 | | 106 | 87 | | | 149 | 94 | | | | |
| 09:15 | | 103 | 78 | | | 140 | 62 | | | | |
| 09:30 | | 110 | 81 | | | 144 | 42 | | | | |
| 09:45 | | 142 | 72 | 461 | 318 | **161** | 33 | 594 | 231 | 1055 | 549 |
| 10:00 | | 121 | 49 | | | **171** | 43 | | | | |
| 10:15 | | 113 | 59 | | | **167** | 30 | | | | |
| 10:30 | | 143 | 40 | | | **149** | 23 | | | | |
| 10:45 | | 137 | 29 | 514 | 177 | 133 | 18 | 620 | 114 | 1134 | 291 |
| 11:00 | | **149** | 20 | | | 161 | 26 | | | | |
| 11:15 | | **135** | 18 | | | 151 | 14 | | | | |
| 11:30 | | **148** | 13 | | | 181 | 20 | | | | |
| 11:45 | | **155** | 14 | 587 | 65 | 142 | 15 | 635 | 75 | 1222 | 140 |
| Total | | 2948 | 7079 | 2948 | 7079 | 4421 | 5478 | 4421 | 5478 | 7369 | 12557 |
| Combined Total | | 10027 | | 10027 | | 9899 | | 9899 | | 19926 | |
| AM Peak | - | 11:00 | - | - | - | 09:45 | - | - | - | - | - |
| Vol. | - | 587 | - | - | - | 648 | - | - | - | - | - |
| P.H.F. | | 0.947 | | | | 0.947 | | | | | |
| PM Peak | - | - | 05:00 | - | - | - | 02:45 | - | - | - | - |
| Vol. | - | - | 1026 | - | - | - | 734 | - | - | - | - |
| P.H.F. | | | 0.913 | | | | 0.846 | | | | |
| Percentage | | 29.4% | 70.6% | | | 44.7% | 55.3% | | | | |
| ADT/AADT | | ADT 19,926 | | AADT 19,926 | | | | | | | |

# Counts Unlimited, Inc.

PO Box 1178
Corona, CA 92878
Phone: 951-268-6268
email: counts@countsunlimited.com

City of Yucaipa
Avenue E
B/ Yucaipa Boulevard - Dunlap Boulevard
24 Hour Directional Volume Count

YUC004
Site Code: 202-18899

| Start Time | 04-Dec-18 Tue | Eastbound Morning | Eastbound Afternoon | Hour Totals Morning | Hour Totals Afternoon | Westbound Morning | Westbound Afternoon | Hour Totals Morning | Hour Totals Afternoon | Combined Totals Morning | Combined Totals Afternoon |
|---|---|---|---|---|---|---|---|---|---|---|---|
| 12:00 | | 10 | 56 | | | 11 | 64 | | | | |
| 12:15 | | 8 | 66 | | | 15 | 63 | | | | |
| 12:30 | | 6 | 57 | | | 9 | **69** | | | | |
| 12:45 | | 4 | 45 | 28 | 224 | 8 | **59** | 43 | 255 | 71 | 479 |
| 01:00 | | 1 | 48 | | | 7 | **74** | | | | |
| 01:15 | | 2 | 31 | | | 4 | **75** | | | | |
| 01:30 | | 0 | 47 | | | 9 | 48 | | | | |
| 01:45 | | 1 | 48 | 4 | 174 | 3 | 60 | 23 | 257 | 27 | 431 |
| 02:00 | | 1 | 40 | | | 9 | 48 | | | | |
| 02:15 | | 1 | 36 | | | 3 | 68 | | | | |
| 02:30 | | 4 | 35 | | | 3 | 66 | | | | |
| 02:45 | | 0 | 51 | 6 | 162 | 1 | 47 | 16 | 229 | 22 | 391 |
| 03:00 | | 0 | 56 | | | 4 | 65 | | | | |
| 03:15 | | 4 | 63 | | | 4 | 67 | | | | |
| 03:30 | | 6 | 47 | | | 3 | 95 | | | | |
| 03:45 | | 0 | 57 | 10 | 223 | 4 | 48 | 15 | 275 | 25 | 498 |
| 04:00 | | 4 | 56 | | | 5 | 62 | | | | |
| 04:15 | | 1 | 59 | | | 7 | 53 | | | | |
| 04:30 | | 2 | 70 | | | 12 | 59 | | | | |
| 04:45 | | 14 | **78** | 21 | 263 | 8 | 71 | 32 | 245 | 53 | 508 |
| 05:00 | | 9 | **60** | | | 10 | 73 | | | | |
| 05:15 | | 5 | **65** | | | 9 | 51 | | | | |
| 05:30 | | 7 | **75** | | | 21 | 65 | | | | |
| 05:45 | | 12 | 55 | 33 | 255 | 27 | 55 | 67 | 244 | 100 | 499 |
| 06:00 | | 16 | 67 | | | 20 | 64 | | | | |
| 06:15 | | 22 | 74 | | | 30 | 49 | | | | |
| 06:30 | | 29 | 69 | | | 34 | 52 | | | | |
| 06:45 | | 31 | 45 | 98 | 255 | 43 | 55 | 127 | 220 | 225 | 475 |
| 07:00 | | 19 | 50 | | | 56 | 47 | | | | |
| 07:15 | | 24 | 59 | | | 37 | 45 | | | | |
| 07:30 | | 29 | 59 | | | 48 | 42 | | | | |
| 07:45 | | 27 | 55 | 99 | 223 | 42 | 51 | 183 | 185 | 282 | 408 |
| 08:00 | | 32 | 36 | | | 39 | 51 | | | | |
| 08:15 | | 19 | 37 | | | 51 | 31 | | | | |
| 08:30 | | 29 | 38 | | | 37 | 33 | | | | |
| 08:45 | | 38 | 35 | 118 | 146 | 42 | 41 | 169 | 156 | 287 | 302 |
| 09:00 | | 30 | 44 | | | 46 | 32 | | | | |
| 09:15 | | 30 | 37 | | | 47 | 27 | | | | |
| 09:30 | | 29 | 26 | | | 35 | 31 | | | | |
| 09:45 | | 39 | 20 | 128 | 127 | 28 | 29 | 156 | 119 | 284 | 246 |
| 10:00 | | 38 | 21 | | | 51 | 18 | | | | |
| 10:15 | | 37 | 23 | | | 24 | 23 | | | | |
| 10:30 | | 43 | 21 | | | 49 | 34 | | | | |
| 10:45 | | 39 | 11 | 157 | 76 | 42 | 15 | 166 | 90 | 323 | 166 |
| 11:00 | | **38** | 12 | | | **52** | 19 | | | | |
| 11:15 | | **41** | 16 | | | **48** | 13 | | | | |
| 11:30 | | **58** | 12 | | | **64** | 15 | | | | |
| 11:45 | | **50** | 12 | 187 | 52 | **56** | 11 | 220 | 58 | 407 | 110 |
| Total | | 889 | 2180 | 889 | 2180 | 1217 | 2333 | 1217 | 2333 | 2106 | 4513 |
| Combined Total | | 3069 | | 3069 | | 3550 | | 3550 | | 6619 | |
| AM Peak | - | 11:00 | - | - | - | 11:00 | - | - | - | - | - |
| Vol. | - | 187 | - | - | - | 220 | - | - | - | - | - |
| P.H.F. | | 0.806 | | | | 0.859 | | | | | |
| PM Peak | - | - | 04:45 | - | - | - | 00:30 | - | - | - | - |
| Vol. | - | - | 278 | - | - | - | 277 | - | - | - | - |
| P.H.F. | | | 0.891 | | | | 0.923 | | | | |
| Percentage | | 29.0% | 71.0% | | | 34.3% | 65.7% | | | | |
| ADT/AADT | | ADT 6,619 | | AADT 6,619 | | | | | | | |

# Counts Unlimited, Inc.

PO Box 1178
Corona, CA 92878
Phone: 951-268-6268
email: counts@countsunlimited.com

City of Yucaipa
Dunlap Boulevard
S/ Avenue E
24 Hour Directional Volume Count

YUC005
Site Code: 202-18899

| Start Time | 04-Dec-18 Tue | Northbound Morning | Northbound Afternoon | Hour Totals Morning | Hour Totals Afternoon | Southbound Morning | Southbound Afternoon | Hour Totals Morning | Hour Totals Afternoon | Combined Totals Morning | Combined Totals Afternoon |
|---|---|---|---|---|---|---|---|---|---|---|---|
| 12:00 | | 3 | 12 | | | 4 | 7 | | | | |
| 12:15 | | 1 | 10 | | | 0 | 14 | | | | |
| 12:30 | | 2 | 10 | | | 0 | 7 | | | | |
| 12:45 | | 0 | 4 | 6 | 36 | 0 | 13 | 4 | 41 | 10 | 77 |
| 01:00 | | 1 | 7 | | | 0 | 8 | | | | |
| 01:15 | | 1 | 10 | | | 0 | 8 | | | | |
| 01:30 | | 4 | 9 | | | 1 | 6 | | | | |
| 01:45 | | 2 | 9 | 8 | 35 | 0 | 9 | 1 | 31 | 9 | 66 |
| 02:00 | | 2 | 13 | | | 0 | 7 | | | | |
| 02:15 | | 1 | 6 | | | 1 | 2 | | | | |
| 02:30 | | 0 | 11 | | | 0 | 7 | | | | |
| 02:45 | | 0 | 10 | 3 | 40 | 0 | 13 | 1 | 29 | 4 | 69 |
| 03:00 | | 0 | 19 | | | 0 | **11** | | | | |
| 03:15 | | 2 | 12 | | | 1 | **13** | | | | |
| 03:30 | | 0 | 33 | | | 1 | **11** | | | | |
| 03:45 | | 1 | 14 | 3 | 78 | 0 | **16** | 2 | 51 | 5 | 129 |
| 04:00 | | 1 | 23 | | | 0 | 5 | | | | |
| 04:15 | | 1 | **16** | | | 0 | 8 | | | | |
| 04:30 | | 2 | **35** | | | 0 | 8 | | | | |
| 04:45 | | 1 | **20** | 5 | 94 | 9 | 10 | 9 | 31 | 14 | 125 |
| 05:00 | | 3 | **24** | | | 4 | 7 | | | | |
| 05:15 | | 2 | 15 | | | 2 | 10 | | | | |
| 05:30 | | 5 | 16 | | | 4 | 7 | | | | |
| 05:45 | | 7 | 3 | 17 | 58 | 6 | 9 | 16 | 33 | 33 | 91 |
| 06:00 | | 5 | 3 | | | 10 | 5 | | | | |
| 06:15 | | 8 | 5 | | | 13 | 7 | | | | |
| 06:30 | | 6 | 7 | | | 8 | 8 | | | | |
| 06:45 | | 4 | 4 | 23 | 19 | 9 | 8 | 40 | 28 | 63 | 47 |
| 07:00 | | 18 | 4 | | | 7 | 5 | | | | |
| 07:15 | | 3 | 7 | | | **9** | 6 | | | | |
| 07:30 | | 6 | 1 | | | **12** | 12 | | | | |
| 07:45 | | 7 | 3 | 34 | 15 | **15** | 1 | 43 | 24 | 77 | 39 |
| 08:00 | | 10 | 4 | | | **9** | 3 | | | | |
| 08:15 | | 10 | 0 | | | 8 | 3 | | | | |
| 08:30 | | 11 | 4 | | | 5 | 4 | | | | |
| 08:45 | | 9 | 2 | 40 | 10 | 8 | 6 | 30 | 16 | 70 | 26 |
| 09:00 | | 9 | 3 | | | 8 | 6 | | | | |
| 09:15 | | 12 | 0 | | | 9 | 1 | | | | |
| 09:30 | | 8 | 3 | | | 4 | 2 | | | | |
| 09:45 | | 11 | 5 | 40 | 11 | 6 | 5 | 27 | 14 | 67 | 25 |
| 10:00 | | 8 | 1 | | | 3 | 3 | | | | |
| 10:15 | | 8 | 1 | | | 8 | 3 | | | | |
| 10:30 | | 10 | 2 | | | 10 | 4 | | | | |
| 10:45 | | 5 | 0 | 31 | 4 | 6 | 0 | 27 | 10 | 58 | 14 |
| 11:00 | | **18** | 1 | | | 4 | 0 | | | | |
| 11:15 | | **8** | 1 | | | 7 | 1 | | | | |
| 11:30 | | **10** | 3 | | | 4 | 1 | | | | |
| 11:45 | | **17** | 2 | 53 | 7 | 8 | 2 | 23 | 4 | 76 | 11 |
| Total | | 263 | 407 | 263 | 407 | 223 | 312 | 223 | 312 | 486 | 719 |
| Combined Total | | 670 | | 670 | | 535 | | 535 | | 1205 | |
| AM Peak | - | 11:00 | - | - | - | 07:15 | - | - | - | - | - |
| Vol. | - | 53 | - | - | - | 45 | - | - | - | - | - |
| P.H.F. | | 0.736 | | | | 0.750 | | | | | |
| PM Peak | - | - | 04:15 | - | - | - | 03:00 | - | - | - | - |
| Vol. | - | - | 95 | - | - | - | 51 | - | - | - | - |
| P.H.F. | | | 0.679 | | | | 0.797 | | | | |
| Percentage | | 39.3% | 60.7% | | | 41.7% | 58.3% | | | | |
| ADT/AADT | | ADT 1,205 | | AADT 1,205 | | | | | | | |

# Counts Unlimited, Inc.

PO Box 1178
Corona, CA 92878
Phone: 951-268-6268
email: counts@countsunlimited.com

City of Yucaipa
Avenue E
B/ Dunlap Boulevard - 18th Street
24 Hour Directional Volume Count

YUC006
Site Code: 202-18899

| Start Time | 04-Dec-18 Tue | Eastbound Morning | Eastbound Afternoon | Hour Totals Morning | Hour Totals Afternoon | Westbound Morning | Westbound Afternoon | Hour Totals Morning | Hour Totals Afternoon | Combined Totals Morning | Combined Totals Afternoon |
|---|---|---|---|---|---|---|---|---|---|---|---|
| 12:00 | | 0 | 14 | | | 1 | 16 | | | | |
| 12:15 | | 6 | 22 | | | 5 | 8 | | | | |
| 12:30 | | 2 | 18 | | | 1 | 15 | | | | |
| 12:45 | | 2 | 13 | 10 | 67 | 1 | **22** | 8 | 61 | 18 | 128 |
| 01:00 | | 1 | 25 | | | 1 | **19** | | | | |
| 01:15 | | 1 | 8 | | | 0 | **23** | | | | |
| 01:30 | | 1 | 21 | | | 0 | **19** | | | | |
| 01:45 | | 1 | 18 | 4 | 72 | 0 | 15 | 1 | 76 | 5 | 148 |
| 02:00 | | 1 | 17 | | | 0 | 12 | | | | |
| 02:15 | | 0 | 10 | | | 2 | 17 | | | | |
| 02:30 | | 0 | 24 | | | 0 | 16 | | | | |
| 02:45 | | 1 | 28 | 2 | 79 | 1 | 10 | 3 | 55 | 5 | 134 |
| 03:00 | | 0 | 15 | | | 2 | 28 | | | | |
| 03:15 | | 2 | 24 | | | 1 | 23 | | | | |
| 03:30 | | 2 | 21 | | | 3 | 18 | | | | |
| 03:45 | | 1 | 26 | 5 | 86 | 2 | 13 | 8 | 82 | 13 | 168 |
| 04:00 | | 0 | 29 | | | 5 | 23 | | | | |
| 04:15 | | 1 | **34** | | | 4 | 16 | | | | |
| 04:30 | | 1 | **33** | | | 8 | 12 | | | | |
| 04:45 | | 0 | **24** | 2 | 120 | 5 | 17 | 22 | 68 | 24 | 188 |
| 05:00 | | 2 | **33** | | | 7 | 23 | | | | |
| 05:15 | | 2 | 27 | | | 4 | 5 | | | | |
| 05:30 | | 2 | 22 | | | 15 | 11 | | | | |
| 05:45 | | 3 | 23 | 9 | 105 | 14 | 14 | 40 | 53 | 49 | 158 |
| 06:00 | | 4 | 24 | | | 15 | 21 | | | | |
| 06:15 | | 8 | 25 | | | 21 | 14 | | | | |
| 06:30 | | 12 | 24 | | | 22 | 16 | | | | |
| 06:45 | | 13 | 28 | 37 | 101 | 29 | 11 | 87 | 62 | 124 | 163 |
| 07:00 | | 4 | 16 | | | 28 | 10 | | | | |
| 07:15 | | 8 | 24 | | | 26 | 13 | | | | |
| 07:30 | | 7 | 18 | | | **34** | 5 | | | | |
| 07:45 | | 8 | 11 | 27 | 69 | **29** | 12 | 117 | 40 | 144 | 109 |
| 08:00 | | 9 | 9 | | | **25** | 12 | | | | |
| 08:15 | | 8 | 11 | | | **35** | 2 | | | | |
| 08:30 | | 6 | 11 | | | 15 | 5 | | | | |
| 08:45 | | 16 | 14 | 39 | 45 | 17 | 9 | 92 | 28 | 131 | 73 |
| 09:00 | | 4 | 8 | | | 17 | 6 | | | | |
| 09:15 | | 9 | 16 | | | 15 | 9 | | | | |
| 09:30 | | 12 | 13 | | | 18 | 8 | | | | |
| 09:45 | | 18 | 10 | 43 | 47 | 5 | 5 | 55 | 28 | 98 | 75 |
| 10:00 | | 9 | 7 | | | 19 | 3 | | | | |
| 10:15 | | 9 | 10 | | | 9 | 0 | | | | |
| 10:30 | | 10 | 8 | | | 15 | 6 | | | | |
| 10:45 | | 12 | 7 | 40 | 32 | 10 | 4 | 53 | 13 | 93 | 45 |
| 11:00 | | **11** | 8 | | | 19 | 5 | | | | |
| 11:15 | | **14** | 4 | | | 17 | 1 | | | | |
| 11:30 | | **9** | 4 | | | 16 | 3 | | | | |
| 11:45 | | **16** | 3 | 50 | 19 | 12 | 4 | 64 | 13 | 114 | 32 |
| Total | | 268 | 842 | 268 | 842 | 550 | 579 | 550 | 579 | 818 | 1421 |
| Combined Total | | 1110 | | 1110 | | 1129 | | 1129 | | 2239 | |
| AM Peak | - | 11:00 | - | - | - | 07:30 | - | - | - | - | - |
| Vol. | - | 50 | - | - | - | 123 | - | - | - | - | - |
| P.H.F. | | 0.694 | | | | 0.879 | | | | | |
| PM Peak | - | - | 04:15 | - | - | - | 00:45 | - | - | - | - |
| Vol. | - | - | 124 | - | - | - | 83 | - | - | - | - |
| P.H.F. | | | 0.912 | | | | 0.902 | | | | |
| Percentage | | 24.1% | 75.9% | | | 48.7% | 51.3% | | | | |
| ADT/AADT | | ADT 2,239 | | AADT 2,239 | | | | | | | |

# Counts Unlimited, Inc.

PO Box 1178
Corona, CA 92878
Phone: 951-268-6268
email: counts@countsunlimited.com

City of Yucaipa
Avenue E
B/ 18th Street - 17th Street
24 Hour Directional Volume Count

YUC007
Site Code: 202-18899

| Start Time | 04-Dec-18 Tue | Eastbound Morning | Eastbound Afternoon | Hour Totals Morning | Hour Totals Afternoon | Westbound Morning | Westbound Afternoon | Hour Totals Morning | Hour Totals Afternoon | Combined Totals Morning | Combined Totals Afternoon |
|---|---|---|---|---|---|---|---|---|---|---|---|
| 12:00 | | 0 | 14 | | | 1 | 18 | | | | |
| 12:15 | | 6 | 23 | | | 5 | 9 | | | | |
| 12:30 | | 2 | 16 | | | 1 | 14 | | | | |
| 12:45 | | 4 | 15 | 12 | 68 | 1 | 24 | 8 | 65 | 20 | 133 |
| 01:00 | | 1 | 20 | | | 1 | 22 | | | | |
| 01:15 | | 1 | 17 | | | 0 | 24 | | | | |
| 01:30 | | 0 | 16 | | | 1 | 19 | | | | |
| 01:45 | | 1 | 16 | 3 | 69 | 1 | 17 | 3 | 82 | 6 | 151 |
| 02:00 | | 1 | 18 | | | 0 | 9 | | | | |
| 02:15 | | 0 | 11 | | | 2 | 15 | | | | |
| 02:30 | | 0 | 25 | | | 0 | 17 | | | | |
| 02:45 | | 1 | 27 | 2 | 81 | 1 | 8 | 3 | 49 | 5 | 130 |
| 03:00 | | 0 | 17 | | | 2 | **31** | | | | |
| 03:15 | | 1 | 28 | | | 1 | **26** | | | | |
| 03:30 | | 1 | 22 | | | 2 | **21** | | | | |
| 03:45 | | 0 | 26 | 2 | 93 | 2 | **17** | 7 | 95 | 9 | 188 |
| 04:00 | | 0 | 23 | | | 4 | 23 | | | | |
| 04:15 | | 1 | **31** | | | 5 | 16 | | | | |
| 04:30 | | 1 | **30** | | | 7 | 13 | | | | |
| 04:45 | | 0 | **26** | 2 | 110 | 4 | 17 | 20 | 69 | 22 | 179 |
| 05:00 | | 2 | **32** | | | 7 | 22 | | | | |
| 05:15 | | 1 | 24 | | | 5 | 24 | | | | |
| 05:30 | | 2 | 34 | | | 14 | 12 | | | | |
| 05:45 | | 3 | 21 | 8 | 111 | 13 | 15 | 39 | 73 | 47 | 184 |
| 06:00 | | 3 | 25 | | | 15 | 19 | | | | |
| 06:15 | | 8 | 23 | | | 19 | 12 | | | | |
| 06:30 | | 10 | 22 | | | 25 | 11 | | | | |
| 06:45 | | 10 | 35 | 31 | 105 | 27 | 11 | 86 | 53 | 117 | 158 |
| 07:00 | | 6 | 16 | | | **28** | 8 | | | | |
| 07:15 | | 11 | 23 | | | **30** | 12 | | | | |
| 07:30 | | 7 | 18 | | | **37** | 6 | | | | |
| 07:45 | | 10 | 11 | 34 | 68 | **32** | 9 | 127 | 35 | 161 | 103 |
| 08:00 | | 11 | 7 | | | 26 | 10 | | | | |
| 08:15 | | 8 | 11 | | | 29 | 2 | | | | |
| 08:30 | | 6 | 10 | | | 23 | 5 | | | | |
| 08:45 | | 15 | 11 | 40 | 39 | 14 | 10 | 92 | 27 | 132 | 66 |
| 09:00 | | 5 | 8 | | | 17 | 5 | | | | |
| 09:15 | | 5 | 10 | | | 15 | 9 | | | | |
| 09:30 | | 17 | 14 | | | 13 | 8 | | | | |
| 09:45 | | 14 | 12 | 41 | 44 | 5 | 5 | 50 | 27 | 91 | 71 |
| 10:00 | | 8 | 7 | | | 16 | 4 | | | | |
| 10:15 | | 11 | 9 | | | 13 | 0 | | | | |
| 10:30 | | 11 | 8 | | | 16 | 6 | | | | |
| 10:45 | | 11 | 7 | 41 | 31 | 11 | 5 | 56 | 15 | 97 | 46 |
| 11:00 | | **14** | 8 | | | 16 | 4 | | | | |
| 11:15 | | **13** | 4 | | | 18 | 1 | | | | |
| 11:30 | | **12** | 4 | | | 21 | 4 | | | | |
| 11:45 | | **14** | 5 | 53 | 21 | 9 | 4 | 64 | 13 | 117 | 34 |
| Total | | 269 | 840 | 269 | 840 | 555 | 603 | 555 | 603 | 824 | 1443 |
| Combined Total | | 1109 | | 1109 | | 1158 | | 1158 | | 2267 | |
| AM Peak | - | 11:00 | - | - | - | 07:00 | - | - | - | - | - |
| Vol. | - | 53 | - | - | - | 127 | - | - | - | - | - |
| P.H.F. | | 0.946 | | | | 0.858 | | | | | |
| PM Peak | - | - | 04:15 | - | - | - | 03:00 | - | - | - | - |
| Vol. | - | - | 119 | - | - | - | 95 | - | - | - | - |
| P.H.F. | | | 0.930 | | | | 0.766 | | | | |
| Percentage | | 24.3% | 75.7% | | | 47.9% | 52.1% | | | | |
| ADT/AADT | | ADT 2,267 | | AADT 2,267 | | | | | | | |

# Appendix B: LOS Worksheets

| Lane Group | EBT | WBL | WBT | SBL | SBT |
|---|---|---|---|---|---|
| Lane Group Flow (vph) | 191 | 72 | 79 | 332 | 314 |
| v/c Ratio | 0.35 | 0.54 | 0.09 | 0.33 | 0.31 |
| Control Delay | 18.6 | 48.7 | 28.2 | 8.1 | 6.4 |
| Queue Delay | 0.0 | 0.0 | 0.0 | 0.0 | 0.0 |
| Total Delay | 18.6 | 48.7 | 28.2 | 8.1 | 6.4 |
| Queue Length 50th (ft) | 24 | 27 | 14 | 54 | 37 |
| Queue Length 95th (ft) | 45 | #59 | 23 | 116 | 90 |
| Internal Link Dist (ft) | 117 | | 320 | | 250 |
| Turn Bay Length (ft) | | 115 | | | |
| Base Capacity (vph) | 1070 | 134 | 1609 | 1018 | 1004 |
| Starvation Cap Reductn | 0 | 0 | 0 | 0 | 0 |
| Spillback Cap Reductn | 0 | 0 | 0 | 0 | 0 |
| Storage Cap Reductn | 0 | 0 | 0 | 0 | 0 |
| Reduced v/c Ratio | 0.18 | 0.54 | 0.05 | 0.33 | 0.31 |

Intersection Summary

# 95th percentile volume exceeds capacity, queue may be longer.
Queue shown is maximum after two cycles.

| Movement | EBL | EBT | EBR | WBL | WBT | WBR | NBL | NBT | NBR | SBL | SBT | SBR |
|---|---|---|---|---|---|---|---|---|---|---|---|---|
| Lane Configurations | | | | | | | | | | | | |
| Traffic Volume (veh/h) | 0 | 162 | 14 | 66 | 73 | 0 | 0 | 0 | 0 | 477 | 3 | 115 |
| Future Volume (veh/h) | 0 | 162 | 14 | 66 | 73 | 0 | 0 | 0 | 0 | 477 | 3 | 115 |
| Number | 7 | 4 | 14 | 3 | 8 | 18 | | | | 1 | 6 | 16 |
| Initial Q (Qb), veh | 0 | 0 | 0 | 0 | 0 | 0 | | | | 0 | 0 | 0 |
| Ped-Bike Adj(A_pbT) | 1.00 | | 1.00 | 1.00 | | 1.00 | | | | 1.00 | | 1.00 |
| Parking Bus, Adj | 1.00 | 1.00 | 1.00 | 1.00 | 1.00 | 1.00 | | | | 1.00 | 1.00 | 1.00 |
| Adj Sat Flow, veh/h/ln | 0 | 1765 | 1800 | 1765 | 1765 | 0 | | | | 1765 | 1765 | 1800 |
| Adj Flow Rate, veh/h | 0 | 176 | 15 | 72 | 79 | 0 | | | | 323 | 276 | 125 |
| Adj No. of Lanes | 0 | 2 | 0 | 1 | 2 | 0 | | | | 1 | 1 | 0 |
| Peak Hour Factor | 0.92 | 0.92 | 0.92 | 0.92 | 0.92 | 0.92 | | | | 0.92 | 0.92 | 0.92 |
| Percent Heavy Veh, % | 0 | 2 | 2 | 2 | 2 | 0 | | | | 2 | 2 | 2 |
| Cap, veh/h | 0 | 330 | 28 | 88 | 797 | 0 | | | | 1012 | 694 | 314 |
| Arrive On Green | 0.00 | 0.11 | 0.11 | 0.05 | 0.24 | 0.00 | | | | 0.60 | 0.60 | 0.60 |
| Sat Flow, veh/h | 0 | 3218 | 264 | 1681 | 3441 | 0 | | | | 1681 | 1151 | 521 |
| Grp Volume(v), veh/h | 0 | 94 | 97 | 72 | 79 | 0 | | | | 323 | 0 | 401 |
| Grp Sat Flow(s),veh/h/ln | 0 | 1676 | 1718 | 1681 | 1676 | 0 | | | | 1681 | 0 | 1673 |
| Q Serve(g_s), s | 0.0 | 2.6 | 2.7 | 2.1 | 0.9 | 0.0 | | | | 4.7 | 0.0 | 6.3 |
| Cycle Q Clear(g_c), s | 0.0 | 2.6 | 2.7 | 2.1 | 0.9 | 0.0 | | | | 4.7 | 0.0 | 6.3 |
| Prop In Lane | 0.00 | | 0.15 | 1.00 | | 0.00 | | | | 1.00 | | 0.31 |
| Lane Grp Cap(c), veh/h | 0 | 177 | 181 | 88 | 797 | 0 | | | | 1012 | 0 | 1008 |
| V/C Ratio(X) | 0.00 | 0.53 | 0.54 | 0.82 | 0.10 | 0.00 | | | | 0.32 | 0.00 | 0.40 |
| Avail Cap(c_a), veh/h | 0 | 536 | 550 | 134 | 1609 | 0 | | | | 1012 | 0 | 1008 |
| HCM Platoon Ratio | 1.00 | 1.00 | 1.00 | 1.00 | 1.00 | 1.00 | | | | 1.00 | 1.00 | 1.00 |
| Upstream Filter(I) | 0.00 | 1.00 | 1.00 | 0.99 | 0.99 | 0.00 | | | | 1.00 | 0.00 | 1.00 |
| Uniform Delay (d), s/veh | 0.0 | 21.2 | 21.2 | 23.5 | 14.9 | 0.0 | | | | 4.9 | 0.0 | 5.2 |
| Incr Delay (d2), s/veh | 0.0 | 2.4 | 2.5 | 20.3 | 0.1 | 0.0 | | | | 0.8 | 0.0 | 1.2 |
| Initial Q Delay(d3),s/veh | 0.0 | 0.0 | 0.0 | 0.0 | 0.0 | 0.0 | | | | 0.0 | 0.0 | 0.0 |
| %ile BackOfQ(50%),veh/ln | 0.0 | 1.3 | 1.4 | 1.5 | 0.4 | 0.0 | | | | 2.4 | 0.0 | 3.1 |
| LnGrp Delay(d),s/veh | 0.0 | 23.6 | 23.7 | 43.8 | 14.9 | 0.0 | | | | 5.7 | 0.0 | 6.4 |
| LnGrp LOS | | C | C | D | B | | | | | A | | A |
| Approach Vol, veh/h | | 191 | | | 151 | | | | | | 724 | |
| Approach Delay, s/veh | | 23.7 | | | 28.7 | | | | | | 6.1 | |
| Approach LOS | | C | | | C | | | | | | A | |

| Timer | 1 | 2 | 3 | 4 | 5 | 6 | 7 | 8 |
|---|---|---|---|---|---|---|---|---|
| Assigned Phs | | | 3 | 4 | | 6 | | 8 |
| Phs Duration (G+Y+Rc), s | | | 6.6 | 9.3 | | 34.1 | | 15.9 |
| Change Period (Y+Rc), s | | | 4.0 | 4.0 | | 4.0 | | 4.0 |
| Max Green Setting (Gmax), s | | | 4.0 | 16.0 | | 18.0 | | 24.0 |
| Max Q Clear Time (g_c+I1), s | | | 4.1 | 4.7 | | 8.3 | | 2.9 |
| Green Ext Time (p_c), s | | | 0.0 | 0.7 | | 2.6 | | 0.4 |

| Intersection Summary | |
|---|---|
| HCM 2010 Ctrl Delay | 12.4 |
| HCM 2010 LOS | B |

Notes

User approved volume balancing among the lanes for turning movement.

| Lane Group | EBL | EBT | WBT | WBR | NBT | NBR |
|---|---|---|---|---|---|---|
| Lane Group Flow (vph) | 97 | 592 | 139 | 708 | 52 | 51 |
| v/c Ratio | 0.49 | 0.56 | 0.21 | 0.47 | 0.06 | 0.06 |
| Control Delay | 26.5 | 20.1 | 16.2 | 4.4 | 0.7 | 0.7 |
| Queue Delay | 0.0 | 0.0 | 0.0 | 0.0 | 0.0 | 0.0 |
| Total Delay | 26.5 | 20.1 | 16.2 | 4.4 | 0.7 | 0.7 |
| Queue Length 50th (ft) | 29 | 97 | 24 | 127 | 0 | 0 |
| Queue Length 95th (ft) | #73 | 139 | 40 | 168 | 5 | 4 |
| Internal Link Dist (ft) | | 320 | 600 | | 228 | |
| Turn Bay Length (ft) | 160 | | | | | |
| Base Capacity (vph) | 201 | 1743 | 1072 | 1500 | 818 | 796 |
| Starvation Cap Reductn | 0 | 0 | 0 | 0 | 0 | 0 |
| Spillback Cap Reductn | 0 | 0 | 0 | 0 | 0 | 0 |
| Storage Cap Reductn | 0 | 0 | 0 | 0 | 0 | 0 |
| Reduced v/c Ratio | 0.48 | 0.34 | 0.13 | 0.47 | 0.06 | 0.06 |

Intersection Summary

# 95th percentile volume exceeds capacity, queue may be longer.
Queue shown is maximum after two cycles.

| Movement | EBL | EBT | EBR | WBL | WBT | WBR | NBL | NBT | NBR | SBL | SBT | SBR |
|---|---|---|---|---|---|---|---|---|---|---|---|---|
| Lane Configurations | | | | | | | | | | | | |
| Traffic Volume (veh/h) | 89 | 545 | 0 | 0 | 128 | 651 | 11 | 0 | 84 | 0 | 0 | 0 |
| Future Volume (veh/h) | 89 | 545 | 0 | 0 | 128 | 651 | 11 | 0 | 84 | 0 | 0 | 0 |
| Number | 7 | 4 | 14 | 3 | 8 | 18 | 5 | 2 | 12 | | | |
| Initial Q (Qb), veh | 0 | 0 | 0 | 0 | 0 | 0 | 0 | 0 | 0 | | | |
| Ped-Bike Adj(A_pbT) | 1.00 | | 1.00 | 1.00 | | 1.00 | 1.00 | | 1.00 | | | |
| Parking Bus, Adj | 1.00 | 1.00 | 1.00 | 1.00 | 1.00 | 1.00 | 1.00 | 1.00 | 1.00 | | | |
| Adj Sat Flow, veh/h/ln | 1765 | 1765 | 0 | 0 | 1765 | 1765 | 1800 | 1765 | 1765 | | | |
| Adj Flow Rate, veh/h | 97 | 592 | 0 | 0 | 139 | 0 | 0 | 0 | 104 | | | |
| Adj No. of Lanes | 1 | 2 | 0 | 0 | 2 | 1 | 0 | 1 | 2 | | | |
| Peak Hour Factor | 0.92 | 0.92 | 0.92 | 0.92 | 0.92 | 0.92 | 0.92 | 0.92 | 0.92 | | | |
| Percent Heavy Veh, % | 2 | 2 | 0 | 0 | 2 | 2 | 2 | 2 | 2 | | | |
| Cap, veh/h | 120 | 841 | 0 | 0 | 334 | 149 | 0 | 1040 | 1767 | | | |
| Arrive On Green | 0.14 | 0.50 | 0.00 | 0.00 | 0.07 | 0.00 | 0.00 | 0.00 | 0.59 | | | |
| Sat Flow, veh/h | 1681 | 3441 | 0 | 0 | 3441 | 1500 | 0 | 1765 | 3000 | | | |
| Grp Volume(v), veh/h | 97 | 592 | 0 | 0 | 139 | 0 | 0 | 0 | 104 | | | |
| Grp Sat Flow(s),veh/h/ln | 1681 | 1676 | 0 | 0 | 1676 | 1500 | 0 | 1765 | 1500 | | | |
| Q Serve(g_s), s | 2.8 | 6.8 | 0.0 | 0.0 | 2.0 | 0.0 | 0.0 | 0.0 | 0.7 | | | |
| Cycle Q Clear(g_c), s | 2.8 | 6.8 | 0.0 | 0.0 | 2.0 | 0.0 | 0.0 | 0.0 | 0.7 | | | |
| Prop In Lane | 1.00 | | 0.00 | 0.00 | | 1.00 | 0.00 | | 1.00 | | | |
| Lane Grp Cap(c), veh/h | 120 | 841 | 0 | 0 | 334 | 149 | 0 | 1040 | 1767 | | | |
| V/C Ratio(X) | 0.81 | 0.70 | 0.00 | 0.00 | 0.42 | 0.00 | 0.00 | 0.00 | 0.06 | | | |
| Avail Cap(c_a), veh/h | 202 | 1744 | 0 | 0 | 1073 | 480 | 0 | 1040 | 1767 | | | |
| HCM Platoon Ratio | 2.00 | 2.00 | 1.00 | 1.00 | 0.67 | 0.67 | 1.00 | 1.00 | 1.00 | | | |
| Upstream Filter(I) | 0.95 | 0.95 | 0.00 | 0.00 | 0.85 | 0.00 | 0.00 | 0.00 | 1.00 | | | |
| Uniform Delay (d), s/veh | 21.1 | 11.0 | 0.0 | 0.0 | 21.9 | 0.0 | 0.0 | 0.0 | 4.4 | | | |
| Incr Delay (d2), s/veh | 11.5 | 1.0 | 0.0 | 0.0 | 0.7 | 0.0 | 0.0 | 0.0 | 0.1 | | | |
| Initial Q Delay(d3),s/veh | 0.0 | 0.0 | 0.0 | 0.0 | 0.0 | 0.0 | 0.0 | 0.0 | 0.0 | | | |
| %ile BackOfQ(50%),veh/ln | 1.7 | 3.1 | 0.0 | 0.0 | 1.0 | 0.0 | 0.0 | 0.0 | 0.3 | | | |
| LnGrp Delay(d),s/veh | 32.6 | 12.1 | 0.0 | 0.0 | 22.6 | 0.0 | 0.0 | 0.0 | 4.4 | | | |
| LnGrp LOS | C | B | | | C | | | | A | | | |
| Approach Vol, veh/h | | 689 | | | 139 | | | 104 | | | | |
| Approach Delay, s/veh | | 15.0 | | | 22.6 | | | 4.4 | | | | |
| Approach LOS | | B | | | C | | | A | | | | |

| Timer | 1 | 2 | 3 | 4 | 5 | 6 | 7 | 8 |
|---|---|---|---|---|---|---|---|---|
| Assigned Phs | | 2 | | 4 | | | 7 | 8 |
| Phs Duration (G+Y+Rc), s | | 33.5 | | 16.5 | | | 7.6 | 9.0 |
| Change Period (Y+Rc), s | | 4.0 | | 4.0 | | | 4.0 | 4.0 |
| Max Green Setting (Gmax), s | | 16.0 | | 26.0 | | | 6.0 | 16.0 |
| Max Q Clear Time (g_c+I1), s | | 2.7 | | 8.8 | | | 4.8 | 4.0 |
| Green Ext Time (p_c), s | | 0.2 | | 3.7 | | | 0.0 | 0.5 |

| Intersection Summary | |
|---|---|
| HCM 2010 Ctrl Delay | 14.9 |
| HCM 2010 LOS | B |

Notes

User approved volume balancing among the lanes for turning movement.

| Lane Group | EBL | EBT | WBL | WBT | NBL | NBT | SBL | SBT |
|---|---|---|---|---|---|---|---|---|
| Lane Group Flow (vph) | 154 | 520 | 14 | 588 | 139 | 56 | 160 | 186 |
| v/c Ratio | 0.42 | 0.46 | 0.04 | 0.52 | 0.44 | 0.10 | 0.39 | 0.31 |
| Control Delay | 30.4 | 17.5 | 31.2 | 27.6 | 32.2 | 18.3 | 30.0 | 7.1 |
| Queue Delay | 0.0 | 0.0 | 0.0 | 0.0 | 0.0 | 0.0 | 0.0 | 0.0 |
| Total Delay | 30.4 | 17.5 | 31.2 | 27.6 | 32.2 | 18.3 | 30.0 | 7.1 |
| Queue Length 50th (ft) | 58 | 95 | 7 | 152 | 70 | 17 | 79 | 10 |
| Queue Length 95th (ft) | 126 | 144 | 24 | 205 | 129 | 45 | 139 | 59 |
| Internal Link Dist (ft) | | 600 | | 925 | | 1078 | | 400 |
| Turn Bay Length (ft) | 130 | | 60 | | 90 | | 90 | |
| Base Capacity (vph) | 368 | 1128 | 368 | 1129 | 318 | 549 | 406 | 601 |
| Starvation Cap Reductn | 0 | 0 | 0 | 0 | 0 | 0 | 0 | 0 |
| Spillback Cap Reductn | 0 | 0 | 0 | 0 | 0 | 0 | 0 | 0 |
| Storage Cap Reductn | 0 | 0 | 0 | 0 | 0 | 0 | 0 | 0 |
| Reduced v/c Ratio | 0.42 | 0.46 | 0.04 | 0.52 | 0.44 | 0.10 | 0.39 | 0.31 |

Intersection Summary

| Movement | EBL | EBT | EBR | WBL | WBT | WBR | NBL | NBT | NBR | SBL | SBT | SBR |
|---|---|---|---|---|---|---|---|---|---|---|---|---|
| Lane Configurations | | | | | | | | | | | | |
| Traffic Volume (veh/h) | 142 | 405 | 74 | 13 | 473 | 68 | 128 | 35 | 17 | 147 | 20 | 151 |
| Future Volume (veh/h) | 142 | 405 | 74 | 13 | 473 | 68 | 128 | 35 | 17 | 147 | 20 | 151 |
| Number | 7 | 4 | 14 | 3 | 8 | 18 | 5 | 2 | 12 | 1 | 6 | 16 |
| Initial Q (Qb), veh | 0 | 0 | 0 | 0 | 0 | 0 | 0 | 0 | 0 | 0 | 0 | 0 |
| Ped-Bike Adj(A_pbT) | 1.00 | | 1.00 | 1.00 | | 1.00 | 1.00 | | 1.00 | 1.00 | | 1.00 |
| Parking Bus, Adj | 1.00 | 1.00 | 1.00 | 1.00 | 1.00 | 1.00 | 1.00 | 1.00 | 1.00 | 1.00 | 1.00 | 1.00 |
| Adj Sat Flow, veh/h/ln | 1765 | 1765 | 1800 | 1765 | 1765 | 1800 | 1765 | 1765 | 1800 | 1765 | 1765 | 1800 |
| Adj Flow Rate, veh/h | 154 | 440 | 80 | 14 | 514 | 74 | 139 | 38 | 18 | 160 | 22 | 164 |
| Adj No. of Lanes | 1 | 2 | 0 | 1 | 2 | 0 | 1 | 1 | 0 | 1 | 1 | 0 |
| Peak Hour Factor | 0.92 | 0.92 | 0.92 | 0.92 | 0.92 | 0.92 | 0.92 | 0.92 | 0.92 | 0.92 | 0.92 | 0.92 |
| Percent Heavy Veh, % | 2 | 2 | 2 | 2 | 2 | 2 | 2 | 2 | 2 | 2 | 2 | 2 |
| Cap, veh/h | 370 | 965 | 174 | 370 | 1001 | 144 | 341 | 363 | 172 | 470 | 58 | 431 |
| Arrive On Green | 0.44 | 0.68 | 0.68 | 0.22 | 0.34 | 0.34 | 0.32 | 0.32 | 0.32 | 0.32 | 0.32 | 0.32 |
| Sat Flow, veh/h | 1681 | 2838 | 513 | 1681 | 2944 | 422 | 1193 | 1133 | 537 | 1342 | 181 | 1346 |
| Grp Volume(v), veh/h | 154 | 259 | 261 | 14 | 292 | 296 | 139 | 0 | 56 | 160 | 0 | 186 |
| Grp Sat Flow(s),veh/h/ln | 1681 | 1676 | 1674 | 1681 | 1676 | 1690 | 1193 | 0 | 1670 | 1342 | 0 | 1527 |
| Q Serve(g_s), s | 6.3 | 7.1 | 7.3 | 0.7 | 13.9 | 14.0 | 10.2 | 0.0 | 2.4 | 9.5 | 0.0 | 9.4 |
| Cycle Q Clear(g_c), s | 6.3 | 7.1 | 7.3 | 0.7 | 13.9 | 14.0 | 19.6 | 0.0 | 2.4 | 11.9 | 0.0 | 9.4 |
| Prop In Lane | 1.00 | | 0.31 | 1.00 | | 0.25 | 1.00 | | 0.32 | 1.00 | | 0.88 |
| Lane Grp Cap(c), veh/h | 370 | 570 | 569 | 370 | 570 | 575 | 341 | 0 | 534 | 470 | 0 | 489 |
| V/C Ratio(X) | 0.42 | 0.45 | 0.46 | 0.04 | 0.51 | 0.52 | 0.41 | 0.00 | 0.10 | 0.34 | 0.00 | 0.38 |
| Avail Cap(c_a), veh/h | 370 | 570 | 569 | 370 | 570 | 575 | 341 | 0 | 534 | 470 | 0 | 489 |
| HCM Platoon Ratio | 2.00 | 2.00 | 2.00 | 1.00 | 1.00 | 1.00 | 1.00 | 1.00 | 1.00 | 1.00 | 1.00 | 1.00 |
| Upstream Filter(I) | 1.00 | 1.00 | 1.00 | 1.00 | 1.00 | 1.00 | 1.00 | 0.00 | 1.00 | 1.00 | 0.00 | 1.00 |
| Uniform Delay (d), s/veh | 23.6 | 11.7 | 11.7 | 30.7 | 26.4 | 26.4 | 33.9 | 0.0 | 23.9 | 28.1 | 0.0 | 26.3 |
| Incr Delay (d2), s/veh | 3.4 | 2.6 | 2.7 | 0.2 | 3.3 | 3.3 | 3.6 | 0.0 | 0.4 | 2.0 | 0.0 | 2.2 |
| Initial Q Delay(d3),s/veh | 0.0 | 0.0 | 0.0 | 0.0 | 0.0 | 0.0 | 0.0 | 0.0 | 0.0 | 0.0 | 0.0 | 0.0 |
| %ile BackOfQ(50%),veh/ln | 3.3 | 3.6 | 3.6 | 0.3 | 6.9 | 7.0 | 3.7 | 0.0 | 1.1 | 3.8 | 0.0 | 4.3 |
| LnGrp Delay(d),s/veh | 27.0 | 14.3 | 14.4 | 30.9 | 29.6 | 29.7 | 37.5 | 0.0 | 24.3 | 30.1 | 0.0 | 28.6 |
| LnGrp LOS | C | B | B | C | C | C | D | | C | C | | C |
| Approach Vol, veh/h | | 674 | | | 602 | | | 195 | | | 346 | |
| Approach Delay, s/veh | | 17.2 | | | 29.7 | | | 33.7 | | | 29.3 | |
| Approach LOS | | B | | | C | | | C | | | C | |

| Timer | 1 | 2 | 3 | 4 | 5 | 6 | 7 | 8 |
|---|---|---|---|---|---|---|---|---|
| Assigned Phs | | 2 | 3 | 4 | | 6 | 7 | 8 |
| Phs Duration (G+Y+Rc), s | | 36.0 | 26.0 | 38.0 | | 36.0 | 26.0 | 38.0 |
| Change Period (Y+Rc), s | | 4.0 | 4.0 | 4.0 | | 4.0 | 4.0 | 4.0 |
| Max Green Setting (Gmax), s | | 32.0 | 22.0 | 34.0 | | 32.0 | 22.0 | 34.0 |
| Max Q Clear Time (g_c+I1), s | | 21.6 | 2.7 | 9.3 | | 13.9 | 8.3 | 16.0 |
| Green Ext Time (p_c), s | | 0.5 | 0.0 | 3.3 | | 1.5 | 0.3 | 3.4 |

| Intersection Summary | |
|---|---|
| HCM 2010 Ctrl Delay | 25.4 |
| HCM 2010 LOS | C |

| Intersection | |
|---|---|
| Int Delay, s/veh | 1.7 |

| Movement | EBL | EBT | WBT | WBR | SBL | SBR |
|---|---|---|---|---|---|---|
| Lane Configurations | | | | | | |
| Traffic Vol, veh/h | 8 | 115 | 32 | 36 | 33 | 0 |
| Future Vol, veh/h | 8 | 115 | 32 | 36 | 33 | 0 |
| Conflicting Peds, #/hr | 0 | 0 | 0 | 0 | 0 | 0 |
| Sign Control | Free | Free | Free | Free | Stop | Stop |
| RT Channelized | - | None | - | None | - | None |
| Storage Length | - | - | - | - | 0 | - |
| Veh in Median Storage, # | - | 0 | 0 | - | 0 | - |
| Grade, % | - | 0 | 0 | - | 0 | - |
| Peak Hour Factor | 92 | 92 | 92 | 92 | 92 | 92 |
| Heavy Vehicles, % | 2 | 2 | 2 | 2 | 2 | 2 |
| Mvmt Flow | 9 | 125 | 35 | 39 | 36 | 0 |

| Major/Minor | Major1 | | Major2 | | Minor2 | |
|---|---|---|---|---|---|---|
| Conflicting Flow All | 74 | 0 | - | 0 | 198 | 55 |
| Stage 1 | - | - | - | - | 55 | - |
| Stage 2 | - | - | - | - | 143 | - |
| Critical Hdwy | 4.12 | - | - | - | 6.42 | 6.22 |
| Critical Hdwy Stg 1 | - | - | - | - | 5.42 | - |
| Critical Hdwy Stg 2 | - | - | - | - | 5.42 | - |
| Follow-up Hdwy | 2.218 | - | - | - | 3.518 | 3.318 |
| Pot Cap-1 Maneuver | 1526 | - | - | - | 791 | 1012 |
| Stage 1 | - | - | - | - | 968 | - |
| Stage 2 | - | - | - | - | 884 | - |
| Platoon blocked, % | | - | - | - | | |
| Mov Cap-1 Maneuver | 1526 | - | - | - | 786 | 1012 |
| Mov Cap-2 Maneuver | - | - | - | - | 786 | - |
| Stage 1 | - | - | - | - | 962 | - |
| Stage 2 | - | - | - | - | 884 | - |

| Approach | EB | WB | SB |
|---|---|---|---|
| HCM Control Delay, s | 0.5 | 0 | 9.8 |
| HCM LOS | | | A |

| Minor Lane/Major Mvmt | EBL | EBT | WBT | WBR | SBLn1 |
|---|---|---|---|---|---|
| Capacity (veh/h) | 1526 | - | - | - | 786 |
| HCM Lane V/C Ratio | 0.006 | - | - | - | 0.046 |
| HCM Control Delay (s) | 7.4 | 0 | - | - | 9.8 |
| HCM Lane LOS | A | A | - | - | A |
| HCM 95th %tile Q(veh) | 0 | - | - | - | 0.1 |

| Intersection | |
|---|---|
| Int Delay, s/veh | 0 |

| Movement | EBT | EBR | WBL | WBT | NBL | NBR |
|---|---|---|---|---|---|---|
| Lane Configurations | | | | | | |
| Traffic Vol, veh/h | 475 | 1 | 1 | 586 | 1 | 1 |
| Future Vol, veh/h | 475 | 1 | 1 | 586 | 1 | 1 |
| Conflicting Peds, #/hr | 0 | 0 | 0 | 0 | 0 | 0 |
| Sign Control | Free | Free | Free | Free | Stop | Stop |
| RT Channelized | - | None | - | None | - | None |
| Storage Length | - | - | 90 | - | 0 | - |
| Veh in Median Storage, # | 0 | - | - | 0 | 0 | - |
| Grade, % | 0 | - | - | 0 | 0 | - |
| Peak Hour Factor | 92 | 92 | 92 | 92 | 92 | 92 |
| Heavy Vehicles, % | 2 | 2 | 2 | 2 | 2 | 2 |
| Mvmt Flow | 516 | 1 | 1 | 637 | 1 | 1 |

| Major/Minor | Major1 | | Major2 | | Minor1 | |
|---|---|---|---|---|---|---|
| Conflicting Flow All | 0 | 0 | 517 | 0 | 838 | 259 |
| Stage 1 | - | - | - | - | 517 | - |
| Stage 2 | - | - | - | - | 321 | - |
| Critical Hdwy | - | - | 4.14 | - | 6.84 | 6.94 |
| Critical Hdwy Stg 1 | - | - | - | - | 5.84 | - |
| Critical Hdwy Stg 2 | - | - | - | - | 5.84 | - |
| Follow-up Hdwy | - | - | 2.22 | - | 3.52 | 3.32 |
| Pot Cap-1 Maneuver | - | - | 1045 | - | 305 | 740 |
| Stage 1 | - | - | - | - | 563 | - |
| Stage 2 | - | - | - | - | 708 | - |
| Platoon blocked, % | - | - | | - | | |
| Mov Cap-1 Maneuver | - | - | 1045 | - | 305 | 740 |
| Mov Cap-2 Maneuver | - | - | - | - | 422 | - |
| Stage 1 | - | - | - | - | 562 | - |
| Stage 2 | - | - | - | - | 708 | - |

| Approach | EB | WB | NB |
|---|---|---|---|
| HCM Control Delay, s | 0 | 0 | 11.7 |
| HCM LOS | | | B |

| Minor Lane/Major Mvmt | NBLn1 | EBT | EBR | WBL | WBT |
|---|---|---|---|---|---|
| Capacity (veh/h) | 537 | - | - | 1045 | - |
| HCM Lane V/C Ratio | 0.004 | - | - | 0.001 | - |
| HCM Control Delay (s) | 11.7 | - | - | 8.4 | - |
| HCM Lane LOS | B | - | - | A | - |
| HCM 95th %tile Q(veh) | 0 | - | - | 0 | - |

| Intersection | |
|---|---|
| Int Delay, s/veh | 0.1 |

| Movement | EBL | EBT | WBT | WBR | SBL | SBR |
|---|---|---|---|---|---|---|
| Lane Configurations | | | | | | |
| Traffic Vol, veh/h | 6 | 463 | 596 | 3 | 1 | 3 |
| Future Vol, veh/h | 6 | 463 | 596 | 3 | 1 | 3 |
| Conflicting Peds, #/hr | 0 | 0 | 0 | 0 | 0 | 0 |
| Sign Control | Free | Free | Free | Free | Stop | Stop |
| RT Channelized | - | None | - | None | - | None |
| Storage Length | 90 | - | - | - | 0 | - |
| Veh in Median Storage, # | - | 0 | 0 | - | 0 | - |
| Grade, % | - | 0 | 0 | - | 0 | - |
| Peak Hour Factor | 92 | 92 | 92 | 92 | 92 | 92 |
| Heavy Vehicles, % | 2 | 2 | 2 | 2 | 2 | 2 |
| Mvmt Flow | 7 | 503 | 648 | 3 | 1 | 3 |

| Major/Minor | Major1 | | Major2 | | Minor2 | |
|---|---|---|---|---|---|---|
| Conflicting Flow All | 651 | 0 | - | 0 | 916 | 326 |
| Stage 1 | - | - | - | - | 650 | - |
| Stage 2 | - | - | - | - | 266 | - |
| Critical Hdwy | 4.14 | - | - | - | 6.84 | 6.94 |
| Critical Hdwy Stg 1 | - | - | - | - | 5.84 | - |
| Critical Hdwy Stg 2 | - | - | - | - | 5.84 | - |
| Follow-up Hdwy | 2.22 | - | - | - | 3.52 | 3.32 |
| Pot Cap-1 Maneuver | 931 | - | - | - | 272 | 670 |
| Stage 1 | - | - | - | - | 481 | - |
| Stage 2 | - | - | - | - | 754 | - |
| Platoon blocked, % | | - | - | - | | |
| Mov Cap-1 Maneuver | 931 | - | - | - | 270 | 670 |
| Mov Cap-2 Maneuver | - | - | - | - | 378 | - |
| Stage 1 | - | - | - | - | 477 | - |
| Stage 2 | - | - | - | - | 754 | - |

| Approach | EB | WB | SB |
|---|---|---|---|
| HCM Control Delay, s | 0.1 | 0 | 11.5 |
| HCM LOS | | | B |

| Minor Lane/Major Mvmt | EBL | EBT | WBT | WBR | SBLn1 |
|---|---|---|---|---|---|
| Capacity (veh/h) | 931 | - | - | - | 562 |
| HCM Lane V/C Ratio | 0.007 | - | - | - | 0.008 |
| HCM Control Delay (s) | 8.9 | - | - | - | 11.5 |
| HCM Lane LOS | A | - | - | - | B |
| HCM 95th %tile Q(veh) | 0 | - | - | - | 0 |

| Lane Group | EBT | WBL | WBT | SBL | SBT |
|---|---|---|---|---|---|
| Lane Group Flow (vph) | 157 | 100 | 60 | 782 | 747 |
| v/c Ratio | 0.40 | 0.90 | 0.08 | 0.75 | 0.73 |
| Control Delay | 32.4 | 101.7 | 21.7 | 15.2 | 13.0 |
| Queue Delay | 0.0 | 0.0 | 0.0 | 0.0 | 0.0 |
| Total Delay | 32.4 | 101.7 | 21.7 | 15.2 | 13.0 |
| Queue Length 50th (ft) | 35 | 47 | 11 | 223 | 180 |
| Queue Length 95th (ft) | 61 | #135 | 24 | 426 | 365 |
| Internal Link Dist (ft) | 117 | | 320 | | 250 |
| Turn Bay Length (ft) | | 115 | | | |
| Base Capacity (vph) | 714 | 111 | 1117 | 1045 | 1029 |
| Starvation Cap Reductn | 0 | 0 | 0 | 0 | 0 |
| Spillback Cap Reductn | 0 | 0 | 0 | 0 | 0 |
| Storage Cap Reductn | 0 | 0 | 0 | 0 | 0 |
| Reduced v/c Ratio | 0.22 | 0.90 | 0.05 | 0.75 | 0.73 |

Intersection Summary

# 95th percentile volume exceeds capacity, queue may be longer.
Queue shown is maximum after two cycles.

| Movement | EBL | EBT | EBR | WBL | WBT | WBR | NBL | NBT | NBR | SBL | SBT | SBR |
|---|---|---|---|---|---|---|---|---|---|---|---|---|
| Lane Configurations | | | | | | | | | | | | |
| Traffic Volume (veh/h) | 0 | 140 | 5 | 92 | 55 | 0 | 0 | 0 | 0 | 1090 | 10 | 306 |
| Future Volume (veh/h) | 0 | 140 | 5 | 92 | 55 | 0 | 0 | 0 | 0 | 1090 | 10 | 306 |
| Number | 7 | 4 | 14 | 3 | 8 | 18 | | | | 1 | 6 | 16 |
| Initial Q (Qb), veh | 0 | 0 | 0 | 0 | 0 | 0 | | | | 0 | 0 | 0 |
| Ped-Bike Adj(A_pbT) | 1.00 | | 1.00 | 1.00 | | 1.00 | | | | 1.00 | | 1.00 |
| Parking Bus, Adj | 1.00 | 1.00 | 1.00 | 1.00 | 1.00 | 1.00 | | | | 1.00 | 1.00 | 1.00 |
| Adj Sat Flow, veh/h/ln | 0 | 1765 | 1800 | 1765 | 1765 | 0 | | | | 1765 | 1765 | 1800 |
| Adj Flow Rate, veh/h | 0 | 152 | 5 | 100 | 60 | 0 | | | | 764 | 600 | 333 |
| Adj No. of Lanes | 0 | 2 | 0 | 1 | 2 | 0 | | | | 1 | 1 | 0 |
| Peak Hour Factor | 0.92 | 0.92 | 0.92 | 0.92 | 0.92 | 0.92 | | | | 0.92 | 0.92 | 0.92 |
| Percent Heavy Veh, % | 0 | 2 | 2 | 2 | 2 | 0 | | | | 2 | 2 | 2 |
| Cap, veh/h | 0 | 256 | 8 | 112 | 662 | 0 | | | | 1170 | 743 | 412 |
| Arrive On Green | 0.00 | 0.08 | 0.08 | 0.07 | 0.20 | 0.00 | | | | 0.70 | 0.70 | 0.70 |
| Sat Flow, veh/h | 0 | 3402 | 109 | 1681 | 3441 | 0 | | | | 1681 | 1068 | 593 |
| Grp Volume(v), veh/h | 0 | 77 | 80 | 100 | 60 | 0 | | | | 764 | 0 | 933 |
| Grp Sat Flow(s),veh/h/ln | 0 | 1676 | 1746 | 1681 | 1676 | 0 | | | | 1681 | 0 | 1660 |
| Q Serve(g_s), s | 0.0 | 3.3 | 3.3 | 4.4 | 1.1 | 0.0 | | | | 19.0 | 0.0 | 29.3 |
| Cycle Q Clear(g_c), s | 0.0 | 3.3 | 3.3 | 4.4 | 1.1 | 0.0 | | | | 19.0 | 0.0 | 29.3 |
| Prop In Lane | 0.00 | | 0.06 | 1.00 | | 0.00 | | | | 1.00 | | 0.36 |
| Lane Grp Cap(c), veh/h | 0 | 130 | 135 | 112 | 662 | 0 | | | | 1170 | 0 | 1155 |
| V/C Ratio(X) | 0.00 | 0.59 | 0.60 | 0.89 | 0.09 | 0.00 | | | | 0.65 | 0.00 | 0.81 |
| Avail Cap(c_a), veh/h | 0 | 358 | 372 | 112 | 1118 | 0 | | | | 1170 | 0 | 1155 |
| HCM Platoon Ratio | 1.00 | 1.00 | 1.00 | 1.00 | 1.00 | 1.00 | | | | 1.00 | 1.00 | 1.00 |
| Upstream Filter(I) | 0.00 | 1.00 | 1.00 | 1.00 | 1.00 | 0.00 | | | | 1.00 | 0.00 | 1.00 |
| Uniform Delay (d), s/veh | 0.0 | 33.5 | 33.5 | 34.7 | 24.6 | 0.0 | | | | 6.4 | 0.0 | 7.9 |
| Incr Delay (d2), s/veh | 0.0 | 4.2 | 4.1 | 52.8 | 0.1 | 0.0 | | | | 2.8 | 0.0 | 6.1 |
| Initial Q Delay(d3),s/veh | 0.0 | 0.0 | 0.0 | 0.0 | 0.0 | 0.0 | | | | 0.0 | 0.0 | 0.0 |
| %ile BackOfQ(50%),veh/ln | 0.0 | 1.7 | 1.8 | 3.7 | 0.5 | 0.0 | | | | 9.6 | 0.0 | 15.2 |
| LnGrp Delay(d),s/veh | 0.0 | 37.7 | 37.6 | 87.5 | 24.7 | 0.0 | | | | 9.2 | 0.0 | 14.0 |
| LnGrp LOS | | D | D | F | C | | | | | A | | B |
| Approach Vol, veh/h | | 157 | | | 160 | | | | | | 1697 | |
| Approach Delay, s/veh | | 37.6 | | | 63.9 | | | | | | 11.9 | |
| Approach LOS | | D | | | E | | | | | | B | |

| Timer | 1 | 2 | 3 | 4 | 5 | 6 | 7 | 8 |
|---|---|---|---|---|---|---|---|---|
| Assigned Phs | | | 3 | 4 | | 6 | | 8 |
| Phs Duration (G+Y+Rc), s | | | 9.0 | 9.8 | | 56.2 | | 18.8 |
| Change Period (Y+Rc), s | | | 4.0 | 4.0 | | 4.0 | | 4.0 |
| Max Green Setting (Gmax), s | | | 5.0 | 16.0 | | 42.0 | | 25.0 |
| Max Q Clear Time (g_c+I1), s | | | 6.4 | 5.3 | | 31.3 | | 3.1 |
| Green Ext Time (p_c), s | | | 0.0 | 0.5 | | 7.1 | | 0.3 |

| Intersection Summary | |
|---|---|
| HCM 2010 Ctrl Delay | 18.0 |
| HCM 2010 LOS | B |

Notes

User approved volume balancing among the lanes for turning movement.

| Lane Group | EBL | EBT | WBT | WBR | NBT | NBR |
|---|---|---|---|---|---|---|
| Lane Group Flow (vph) | 108 | 1220 | 152 | 779 | 81 | 80 |
| v/c Ratio | 0.55 | 0.74 | 0.14 | 0.52 | 0.14 | 0.14 |
| Control Delay | 33.1 | 13.3 | 6.9 | 4.8 | 2.9 | 2.8 |
| Queue Delay | 0.0 | 0.0 | 0.0 | 0.0 | 0.0 | 0.0 |
| Total Delay | 33.1 | 13.3 | 6.9 | 4.8 | 2.9 | 2.8 |
| Queue Length 50th (ft) | 31 | 126 | 14 | 148 | 0 | 0 |
| Queue Length 95th (ft) | #82 | 187 | m25 | 190 | 16 | 16 |
| Internal Link Dist (ft) | | 320 | 600 | | 228 | |
| Turn Bay Length (ft) | 160 | | | | | |
| Base Capacity (vph) | 201 | 1743 | 1128 | 1500 | 579 | 569 |
| Starvation Cap Reductn | 0 | 8 | 0 | 0 | 0 | 0 |
| Spillback Cap Reductn | 0 | 0 | 0 | 0 | 0 | 0 |
| Storage Cap Reductn | 0 | 0 | 0 | 0 | 0 | 0 |
| Reduced v/c Ratio | 0.54 | 0.70 | 0.13 | 0.52 | 0.14 | 0.14 |

Intersection Summary

# 95th percentile volume exceeds capacity, queue may be longer.
Queue shown is maximum after two cycles.

m Volume for 95th percentile queue is metered by upstream signal.

| Movement | EBL | EBT | EBR | WBL | WBT | WBR | NBL | NBT | NBR | SBL | SBT | SBR |
|---|---|---|---|---|---|---|---|---|---|---|---|---|
| Lane Configurations | | | | | | | | | | | | |
| Traffic Volume (veh/h) | 99 | 1122 | 0 | 0 | 140 | 717 | 12 | 0 | 136 | 0 | 0 | 0 |
| Future Volume (veh/h) | 99 | 1122 | 0 | 0 | 140 | 717 | 12 | 0 | 136 | 0 | 0 | 0 |
| Number | 7 | 4 | 14 | 3 | 8 | 18 | 5 | 2 | 12 | | | |
| Initial Q (Qb), veh | 0 | 0 | 0 | 0 | 0 | 0 | 0 | 0 | 0 | | | |
| Ped-Bike Adj(A_pbT) | 1.00 | | 1.00 | 1.00 | | 1.00 | 1.00 | | 1.00 | | | |
| Parking Bus, Adj | 1.00 | 1.00 | 1.00 | 1.00 | 1.00 | 1.00 | 1.00 | 1.00 | 1.00 | | | |
| Adj Sat Flow, veh/h/ln | 1765 | 1765 | 0 | 0 | 1765 | 1765 | 1800 | 1765 | 1765 | | | |
| Adj Flow Rate, veh/h | 108 | 1220 | 0 | 0 | 152 | 0 | 0 | 0 | 162 | | | |
| Adj No. of Lanes | 1 | 2 | 0 | 0 | 2 | 1 | 0 | 1 | 2 | | | |
| Peak Hour Factor | 0.92 | 0.92 | 0.92 | 0.92 | 0.92 | 0.92 | 0.92 | 0.92 | 0.92 | | | |
| Percent Heavy Veh, % | 2 | 2 | 0 | 0 | 2 | 2 | 2 | 2 | 2 | | | |
| Cap, veh/h | 135 | 1526 | 0 | 0 | 988 | 442 | 0 | 679 | 1154 | | | |
| Arrive On Green | 0.08 | 0.46 | 0.00 | 0.00 | 0.39 | 0.00 | 0.00 | 0.00 | 0.38 | | | |
| Sat Flow, veh/h | 1681 | 3441 | 0 | 0 | 3441 | 1500 | 0 | 1765 | 3000 | | | |
| Grp Volume(v), veh/h | 108 | 1220 | 0 | 0 | 152 | 0 | 0 | 0 | 162 | | | |
| Grp Sat Flow(s),veh/h/ln | 1681 | 1676 | 0 | 0 | 1676 | 1500 | 0 | 1765 | 1500 | | | |
| Q Serve(g_s), s | 3.2 | 15.6 | 0.0 | 0.0 | 1.5 | 0.0 | 0.0 | 0.0 | 1.8 | | | |
| Cycle Q Clear(g_c), s | 3.2 | 15.6 | 0.0 | 0.0 | 1.5 | 0.0 | 0.0 | 0.0 | 1.8 | | | |
| Prop In Lane | 1.00 | | 0.00 | 0.00 | | 1.00 | 0.00 | | 1.00 | | | |
| Lane Grp Cap(c), veh/h | 135 | 1526 | 0 | 0 | 988 | 442 | 0 | 679 | 1154 | | | |
| V/C Ratio(X) | 0.80 | 0.80 | 0.00 | 0.00 | 0.15 | 0.00 | 0.00 | 0.00 | 0.14 | | | |
| Avail Cap(c_a), veh/h | 202 | 1744 | 0 | 0 | 1073 | 480 | 0 | 679 | 1154 | | | |
| HCM Platoon Ratio | 1.00 | 1.00 | 1.00 | 1.00 | 1.33 | 1.33 | 1.00 | 1.00 | 1.00 | | | |
| Upstream Filter(I) | 0.66 | 0.66 | 0.00 | 0.00 | 0.83 | 0.00 | 0.00 | 0.00 | 1.00 | | | |
| Uniform Delay (d), s/veh | 22.6 | 11.7 | 0.0 | 0.0 | 11.2 | 0.0 | 0.0 | 0.0 | 10.0 | | | |
| Incr Delay (d2), s/veh | 8.7 | 1.6 | 0.0 | 0.0 | 0.1 | 0.0 | 0.0 | 0.0 | 0.3 | | | |
| Initial Q Delay(d3),s/veh | 0.0 | 0.0 | 0.0 | 0.0 | 0.0 | 0.0 | 0.0 | 0.0 | 0.0 | | | |
| %ile BackOfQ(50%),veh/ln | 1.8 | 7.5 | 0.0 | 0.0 | 0.7 | 0.0 | 0.0 | 0.0 | 0.8 | | | |
| LnGrp Delay(d),s/veh | 31.3 | 13.3 | 0.0 | 0.0 | 11.2 | 0.0 | 0.0 | 0.0 | 10.3 | | | |
| LnGrp LOS | C | B | | | B | | | | B | | | |
| Approach Vol, veh/h | | 1328 | | | 152 | | | 162 | | | | |
| Approach Delay, s/veh | | 14.7 | | | 11.2 | | | 10.3 | | | | |
| Approach LOS | | B | | | B | | | B | | | | |

| Timer | 1 | 2 | 3 | 4 | 5 | 6 | 7 | 8 |
|---|---|---|---|---|---|---|---|---|
| Assigned Phs | | 2 | | 4 | | | 7 | 8 |
| Phs Duration (G+Y+Rc), s | | 23.2 | | 26.8 | | | 8.0 | 18.7 |
| Change Period (Y+Rc), s | | 4.0 | | 4.0 | | | 4.0 | 4.0 |
| Max Green Setting (Gmax), s | | 16.0 | | 26.0 | | | 6.0 | 16.0 |
| Max Q Clear Time (g_c+I1), s | | 3.8 | | 17.6 | | | 5.2 | 3.5 |
| Green Ext Time (p_c), s | | 0.4 | | 5.2 | | | 0.0 | 0.6 |

| Intersection Summary | |
|---|---|
| HCM 2010 Ctrl Delay | 14.0 |
| HCM 2010 LOS | B |

Notes

User approved volume balancing among the lanes for turning movement.

| Lane Group | EBL | EBT | WBL | WBT | NBL | NBT | SBL | SBT |
|---|---|---|---|---|---|---|---|---|
| Lane Group Flow (vph) | 173 | 1194 | 75 | 569 | 186 | 97 | 110 | 213 |
| v/c Ratio | 0.47 | 1.06 | 0.20 | 0.50 | 0.63 | 0.18 | 0.28 | 0.34 |
| Control Delay | 29.5 | 70.8 | 33.7 | 27.7 | 40.0 | 11.8 | 27.9 | 6.9 |
| Queue Delay | 0.0 | 0.0 | 0.0 | 0.0 | 0.0 | 0.0 | 0.0 | 0.0 |
| Total Delay | 29.5 | 70.8 | 33.7 | 27.7 | 40.0 | 11.8 | 27.9 | 6.9 |
| Queue Length 50th (ft) | 69 | ~410 | 39 | 147 | 100 | 16 | 52 | 11 |
| Queue Length 95th (ft) | m114 | #553 | 79 | 200 | 181 | 53 | 99 | 62 |
| Internal Link Dist (ft) | | 600 | | 925 | | 1078 | | 400 |
| Turn Bay Length (ft) | 130 | | 60 | | 90 | | 90 | |
| Base Capacity (vph) | 368 | 1127 | 368 | 1131 | 296 | 553 | 392 | 618 |
| Starvation Cap Reductn | 0 | 0 | 0 | 0 | 0 | 0 | 0 | 0 |
| Spillback Cap Reductn | 0 | 0 | 0 | 0 | 0 | 0 | 0 | 0 |
| Storage Cap Reductn | 0 | 0 | 0 | 0 | 0 | 0 | 0 | 0 |
| Reduced v/c Ratio | 0.47 | 1.06 | 0.20 | 0.50 | 0.63 | 0.18 | 0.28 | 0.34 |

Intersection Summary

~ Volume exceeds capacity, queue is theoretically infinite.
Queue shown is maximum after two cycles.

# 95th percentile volume exceeds capacity, queue may be longer.
Queue shown is maximum after two cycles.

m Volume for 95th percentile queue is metered by upstream signal.

| Movement | EBL | EBT | EBR | WBL | WBT | WBR | NBL | NBT | NBR | SBL | SBT | SBR |
|---|---|---|---|---|---|---|---|---|---|---|---|---|
| Lane Configurations | | | | | | | | | | | | |
| Traffic Volume (veh/h) | 159 | 912 | 187 | 69 | 479 | 44 | 171 | 33 | 56 | 101 | 22 | 174 |
| Future Volume (veh/h) | 159 | 912 | 187 | 69 | 479 | 44 | 171 | 33 | 56 | 101 | 22 | 174 |
| Number | 7 | 4 | 14 | 3 | 8 | 18 | 5 | 2 | 12 | 1 | 6 | 16 |
| Initial Q (Qb), veh | 0 | 0 | 0 | 0 | 0 | 0 | 0 | 0 | 0 | 0 | 0 | 0 |
| Ped-Bike Adj(A_pbT) | 1.00 | | 1.00 | 1.00 | | 1.00 | 1.00 | | 1.00 | 1.00 | | 1.00 |
| Parking Bus, Adj | 1.00 | 1.00 | 1.00 | 1.00 | 1.00 | 1.00 | 1.00 | 1.00 | 1.00 | 1.00 | 1.00 | 1.00 |
| Adj Sat Flow, veh/h/ln | 1765 | 1765 | 1800 | 1765 | 1765 | 1800 | 1765 | 1765 | 1800 | 1765 | 1765 | 1800 |
| Adj Flow Rate, veh/h | 173 | 991 | 203 | 75 | 521 | 48 | 186 | 36 | 61 | 110 | 24 | 189 |
| Adj No. of Lanes | 1 | 2 | 0 | 1 | 2 | 0 | 1 | 1 | 0 | 1 | 1 | 0 |
| Peak Hour Factor | 0.92 | 0.92 | 0.92 | 0.92 | 0.92 | 0.92 | 0.92 | 0.92 | 0.92 | 0.92 | 0.92 | 0.92 |
| Percent Heavy Veh, % | 2 | 2 | 2 | 2 | 2 | 2 | 2 | 2 | 2 | 2 | 2 | 2 |
| Cap, veh/h | 370 | 943 | 193 | 370 | 1056 | 97 | 316 | 189 | 320 | 429 | 55 | 433 |
| Arrive On Green | 0.22 | 0.34 | 0.34 | 0.22 | 0.34 | 0.34 | 0.32 | 0.32 | 0.32 | 0.32 | 0.32 | 0.32 |
| Sat Flow, veh/h | 1681 | 2774 | 567 | 1681 | 3105 | 285 | 1164 | 590 | 999 | 1293 | 172 | 1354 |
| Grp Volume(v), veh/h | 173 | 598 | 596 | 75 | 281 | 288 | 186 | 0 | 97 | 110 | 0 | 213 |
| Grp Sat Flow(s),veh/h/ln | 1681 | 1676 | 1665 | 1681 | 1676 | 1714 | 1164 | 0 | 1588 | 1293 | 0 | 1526 |
| Q Serve(g_s), s | 9.0 | 34.0 | 34.0 | 3.6 | 13.3 | 13.3 | 15.0 | 0.0 | 4.4 | 6.7 | 0.0 | 11.0 |
| Cycle Q Clear(g_c), s | 9.0 | 34.0 | 34.0 | 3.6 | 13.3 | 13.3 | 26.1 | 0.0 | 4.4 | 11.2 | 0.0 | 11.0 |
| Prop In Lane | 1.00 | | 0.34 | 1.00 | | 0.17 | 1.00 | | 0.63 | 1.00 | | 0.89 |
| Lane Grp Cap(c), veh/h | 370 | 570 | 566 | 370 | 570 | 583 | 316 | 0 | 508 | 429 | 0 | 488 |
| V/C Ratio(X) | 0.47 | 1.05 | 1.05 | 0.20 | 0.49 | 0.49 | 0.59 | 0.00 | 0.19 | 0.26 | 0.00 | 0.44 |
| Avail Cap(c_a), veh/h | 370 | 570 | 566 | 370 | 570 | 583 | 316 | 0 | 508 | 429 | 0 | 488 |
| HCM Platoon Ratio | 1.00 | 1.00 | 1.00 | 1.00 | 1.00 | 1.00 | 1.00 | 1.00 | 1.00 | 1.00 | 1.00 | 1.00 |
| Upstream Filter(I) | 1.00 | 1.00 | 1.00 | 1.00 | 1.00 | 1.00 | 1.00 | 0.00 | 1.00 | 1.00 | 0.00 | 1.00 |
| Uniform Delay (d), s/veh | 33.9 | 33.0 | 33.0 | 31.8 | 26.2 | 26.2 | 37.2 | 0.0 | 24.6 | 28.7 | 0.0 | 26.9 |
| Incr Delay (d2), s/veh | 4.2 | 51.3 | 52.4 | 1.2 | 3.0 | 3.0 | 7.8 | 0.0 | 0.8 | 1.4 | 0.0 | 2.8 |
| Initial Q Delay(d3),s/veh | 0.0 | 0.0 | 0.0 | 0.0 | 0.0 | 0.0 | 0.0 | 0.0 | 0.0 | 0.0 | 0.0 | 0.0 |
| %ile BackOfQ(50%),veh/ln | 4.6 | 23.8 | 23.8 | 1.8 | 6.6 | 6.8 | 5.5 | 0.0 | 2.1 | 2.6 | 0.0 | 5.0 |
| LnGrp Delay(d),s/veh | 38.1 | 84.3 | 85.4 | 33.1 | 29.2 | 29.2 | 45.0 | 0.0 | 25.5 | 30.1 | 0.0 | 29.7 |
| LnGrp LOS | D | F | F | C | C | C | D | | C | C | | C |
| Approach Vol, veh/h | | 1367 | | | 644 | | | 283 | | | 323 | |
| Approach Delay, s/veh | | 79.0 | | | 29.6 | | | 38.3 | | | 29.8 | |
| Approach LOS | | E | | | C | | | D | | | C | |

| Timer | 1 | 2 | 3 | 4 | 5 | 6 | 7 | 8 |
|---|---|---|---|---|---|---|---|---|
| Assigned Phs | | 2 | 3 | 4 | | 6 | 7 | 8 |
| Phs Duration (G+Y+Rc), s | | 36.0 | 26.0 | 38.0 | | 36.0 | 26.0 | 38.0 |
| Change Period (Y+Rc), s | | 4.0 | 4.0 | 4.0 | | 4.0 | 4.0 | 4.0 |
| Max Green Setting (Gmax), s | | 32.0 | 22.0 | 34.0 | | 32.0 | 22.0 | 34.0 |
| Max Q Clear Time (g_c+I1), s | | 28.1 | 5.6 | 36.0 | | 13.2 | 11.0 | 15.3 |
| Green Ext Time (p_c), s | | 0.5 | 0.1 | 0.0 | | 1.6 | 0.3 | 3.3 |

| Intersection Summary | |
|---|---|
| HCM 2010 Ctrl Delay | 56.4 |
| HCM 2010 LOS | E |

| Intersection | |
|---|---|
| Int Delay, s/veh | 3.1 |

| Movement | EBL | EBT | WBT | WBR | SBL | SBR |
|---|---|---|---|---|---|---|
| Lane Configurations | | | | | | |
| Traffic Vol, veh/h | 0 | 68 | 115 | 33 | 86 | 9 |
| Future Vol, veh/h | 0 | 68 | 115 | 33 | 86 | 9 |
| Conflicting Peds, #/hr | 0 | 0 | 0 | 0 | 0 | 0 |
| Sign Control | Free | Free | Free | Free | Stop | Stop |
| RT Channelized | - | None | - | None | - | None |
| Storage Length | - | - | - | - | 0 | - |
| Veh in Median Storage, # | - | 0 | 0 | - | 0 | - |
| Grade, % | - | 0 | 0 | - | 0 | - |
| Peak Hour Factor | 92 | 92 | 92 | 92 | 92 | 92 |
| Heavy Vehicles, % | 2 | 2 | 2 | 2 | 2 | 2 |
| Mvmt Flow | 0 | 74 | 125 | 36 | 93 | 10 |

| Major/Minor | Major1 | | Major2 | | Minor2 | |
|---|---|---|---|---|---|---|
| Conflicting Flow All | 161 | 0 | - | 0 | 217 | 143 |
| Stage 1 | - | - | - | - | 143 | - |
| Stage 2 | - | - | - | - | 74 | - |
| Critical Hdwy | 4.12 | - | - | - | 6.42 | 6.22 |
| Critical Hdwy Stg 1 | - | - | - | - | 5.42 | - |
| Critical Hdwy Stg 2 | - | - | - | - | 5.42 | - |
| Follow-up Hdwy | 2.218 | - | - | - | 3.518 | 3.318 |
| Pot Cap-1 Maneuver | 1418 | - | - | - | 771 | 905 |
| Stage 1 | - | - | - | - | 884 | - |
| Stage 2 | - | - | - | - | 949 | - |
| Platoon blocked, % | | - | - | - | | |
| Mov Cap-1 Maneuver | 1418 | - | - | - | 771 | 905 |
| Mov Cap-2 Maneuver | - | - | - | - | 771 | - |
| Stage 1 | - | - | - | - | 884 | - |
| Stage 2 | - | - | - | - | 949 | - |

| Approach | EB | WB | SB |
|---|---|---|---|
| HCM Control Delay, s | 0 | 0 | 10.3 |
| HCM LOS | | | B |

| Minor Lane/Major Mvmt | EBL | EBT | WBT | WBR | SBLn1 |
|---|---|---|---|---|---|
| Capacity (veh/h) | 1418 | - | - | - | 782 |
| HCM Lane V/C Ratio | - | - | - | - | 0.132 |
| HCM Control Delay (s) | 0 | - | - | - | 10.3 |
| HCM Lane LOS | A | - | - | - | B |
| HCM 95th %tile Q(veh) | 0 | - | - | - | 0.5 |

| Intersection | |
|---|---|
| Int Delay, s/veh | 0 |

| Movement | EBT | EBR | WBL | WBT | NBL | NBR |
|---|---|---|---|---|---|---|
| Lane Configurations | | | | | | |
| Traffic Vol, veh/h | 970 | 0 | 0 | 674 | 0 | 0 |
| Future Vol, veh/h | 970 | 0 | 0 | 674 | 0 | 0 |
| Conflicting Peds, #/hr | 0 | 0 | 0 | 0 | 0 | 0 |
| Sign Control | Free | Free | Free | Free | Stop | Stop |
| RT Channelized | - | None | - | None | - | None |
| Storage Length | - | - | 90 | - | 0 | - |
| Veh in Median Storage, # | 0 | - | - | 0 | 0 | - |
| Grade, % | 0 | - | - | 0 | 0 | - |
| Peak Hour Factor | 92 | 92 | 92 | 92 | 92 | 92 |
| Heavy Vehicles, % | 2 | 2 | 2 | 2 | 2 | 2 |
| Mvmt Flow | 1054 | 0 | 0 | 733 | 0 | 0 |

| Major/Minor | Major1 | | Major2 | | Minor1 | |
|---|---|---|---|---|---|---|
| Conflicting Flow All | 0 | 0 | 1054 | 0 | 1421 | 527 |
| Stage 1 | - | - | - | - | 1054 | - |
| Stage 2 | - | - | - | - | 367 | - |
| Critical Hdwy | - | - | 4.14 | - | 6.84 | 6.94 |
| Critical Hdwy Stg 1 | - | - | - | - | 5.84 | - |
| Critical Hdwy Stg 2 | - | - | - | - | 5.84 | - |
| Follow-up Hdwy | - | - | 2.22 | - | 3.52 | 3.32 |
| Pot Cap-1 Maneuver | - | - | 656 | - | 127 | 496 |
| Stage 1 | - | - | - | - | 296 | - |
| Stage 2 | - | - | - | - | 671 | - |
| Platoon blocked, % | - | - | | - | | |
| Mov Cap-1 Maneuver | - | - | 656 | - | 127 | 496 |
| Mov Cap-2 Maneuver | - | - | - | - | 234 | - |
| Stage 1 | - | - | - | - | 296 | - |
| Stage 2 | - | - | - | - | 671 | - |

| Approach | EB | WB | NB |
|---|---|---|---|
| HCM Control Delay, s | 0 | 0 | 0 |
| HCM LOS | | | A |

| Minor Lane/Major Mvmt | NBLn1 | EBT | EBR | WBL | WBT |
|---|---|---|---|---|---|
| Capacity (veh/h) | - | - | - | 656 | - |
| HCM Lane V/C Ratio | - | - | - | - | - |
| HCM Control Delay (s) | 0 | - | - | 0 | - |
| HCM Lane LOS | A | - | - | A | - |
| HCM 95th %tile Q(veh) | - | - | - | 0 | - |

| Intersection | |
|---|---|
| Int Delay, s/veh | 0.3 |

| Movement | EBL | EBT | WBT | WBR | SBL | SBR |
|---|---|---|---|---|---|---|
| Lane Configurations | | | | | | |
| Traffic Vol, veh/h | 11 | 1084 | 559 | 3 | 9 | 18 |
| Future Vol, veh/h | 11 | 1084 | 559 | 3 | 9 | 18 |
| Conflicting Peds, #/hr | 0 | 0 | 0 | 0 | 0 | 0 |
| Sign Control | Free | Free | Free | Free | Stop | Stop |
| RT Channelized | - | None | - | None | - | None |
| Storage Length | 90 | - | - | - | 0 | - |
| Veh in Median Storage, # | - | 0 | 0 | - | 0 | - |
| Grade, % | - | 0 | 0 | - | 0 | - |
| Peak Hour Factor | 92 | 92 | 92 | 92 | 92 | 92 |
| Heavy Vehicles, % | 2 | 2 | 2 | 2 | 2 | 2 |
| Mvmt Flow | 12 | 1178 | 608 | 3 | 10 | 20 |

| Major/Minor | Major1 | | Major2 | | Minor2 | |
|---|---|---|---|---|---|---|
| Conflicting Flow All | 611 | 0 | - | 0 | 1223 | 306 |
| Stage 1 | - | - | - | - | 610 | - |
| Stage 2 | - | - | - | - | 613 | - |
| Critical Hdwy | 4.14 | - | - | - | 6.84 | 6.94 |
| Critical Hdwy Stg 1 | - | - | - | - | 5.84 | - |
| Critical Hdwy Stg 2 | - | - | - | - | 5.84 | - |
| Follow-up Hdwy | 2.22 | - | - | - | 3.52 | 3.32 |
| Pot Cap-1 Maneuver | 964 | - | - | - | 172 | 690 |
| Stage 1 | - | - | - | - | 505 | - |
| Stage 2 | - | - | - | - | 503 | - |
| Platoon blocked, % | | - | - | - | | |
| Mov Cap-1 Maneuver | 964 | - | - | - | 170 | 690 |
| Mov Cap-2 Maneuver | - | - | - | - | 304 | - |
| Stage 1 | - | - | - | - | 499 | - |
| Stage 2 | - | - | - | - | 503 | - |

| Approach | EB | WB | SB |
|---|---|---|---|
| HCM Control Delay, s | 0.1 | 0 | 12.9 |
| HCM LOS | | | B |

| Minor Lane/Major Mvmt | EBL | EBT | WBT | WBR | SBLn1 |
|---|---|---|---|---|---|
| Capacity (veh/h) | 964 | - | - | - | 485 |
| HCM Lane V/C Ratio | 0.012 | - | - | - | 0.061 |
| HCM Control Delay (s) | 8.8 | - | - | - | 12.9 |
| HCM Lane LOS | A | - | - | - | B |
| HCM 95th %tile Q(veh) | 0 | - | - | - | 0.2 |

| Lane Group | EBT | WBL | WBT | SBL | SBT |
|---|---|---|---|---|---|
| Lane Group Flow (vph) | 199 | 80 | 88 | 342 | 324 |
| v/c Ratio | 0.36 | 0.60 | 0.10 | 0.34 | 0.32 |
| Control Delay | 18.7 | 52.1 | 27.7 | 8.2 | 6.6 |
| Queue Delay | 0.0 | 0.0 | 0.0 | 0.0 | 0.0 |
| Total Delay | 18.7 | 52.1 | 27.7 | 8.2 | 6.6 |
| Queue Length 50th (ft) | 25 | 32 | 18 | 57 | 40 |
| Queue Length 95th (ft) | 46 | #71 | 25 | 121 | 94 |
| Internal Link Dist (ft) | 117 | | 320 | | 250 |
| Turn Bay Length (ft) | | 115 | | | |
| Base Capacity (vph) | 1071 | 134 | 1609 | 1015 | 1003 |
| Starvation Cap Reductn | 0 | 0 | 0 | 0 | 0 |
| Spillback Cap Reductn | 0 | 0 | 0 | 0 | 0 |
| Storage Cap Reductn | 0 | 0 | 0 | 0 | 0 |
| Reduced v/c Ratio | 0.19 | 0.60 | 0.05 | 0.34 | 0.32 |

Intersection Summary

# 95th percentile volume exceeds capacity, queue may be longer.
Queue shown is maximum after two cycles.

| Movement | EBL | EBT | EBR | WBL | WBT | WBR | NBL | NBT | NBR | SBL | SBT | SBR |
|---|---|---|---|---|---|---|---|---|---|---|---|---|
| Lane Configurations | | | | | | | | | | | | |
| Traffic Volume (veh/h) | 0 | 169 | 14 | 74 | 81 | 0 | 0 | 0 | 0 | 492 | 3 | 118 |
| Future Volume (veh/h) | 0 | 169 | 14 | 74 | 81 | 0 | 0 | 0 | 0 | 492 | 3 | 118 |
| Number | 7 | 4 | 14 | 3 | 8 | 18 | | | | 1 | 6 | 16 |
| Initial Q (Qb), veh | 0 | 0 | 0 | 0 | 0 | 0 | | | | 0 | 0 | 0 |
| Ped-Bike Adj(A_pbT) | 1.00 | | 1.00 | 1.00 | | 1.00 | | | | 1.00 | | 1.00 |
| Parking Bus, Adj | 1.00 | 1.00 | 1.00 | 1.00 | 1.00 | 1.00 | | | | 1.00 | 1.00 | 1.00 |
| Adj Sat Flow, veh/h/ln | 0 | 1765 | 1800 | 1765 | 1765 | 0 | | | | 1765 | 1765 | 1800 |
| Adj Flow Rate, veh/h | 0 | 184 | 15 | 80 | 88 | 0 | | | | 333 | 286 | 128 |
| Adj No. of Lanes | 0 | 2 | 0 | 1 | 2 | 0 | | | | 1 | 1 | 0 |
| Peak Hour Factor | 0.92 | 0.92 | 0.92 | 0.92 | 0.92 | 0.92 | | | | 0.92 | 0.92 | 0.92 |
| Percent Heavy Veh, % | 0 | 2 | 2 | 2 | 2 | 0 | | | | 2 | 2 | 2 |
| Cap, veh/h | 0 | 342 | 28 | 98 | 829 | 0 | | | | 996 | 685 | 307 |
| Arrive On Green | 0.00 | 0.11 | 0.11 | 0.06 | 0.25 | 0.00 | | | | 0.59 | 0.59 | 0.59 |
| Sat Flow, veh/h | 0 | 3231 | 254 | 1681 | 3441 | 0 | | | | 1681 | 1156 | 517 |
| Grp Volume(v), veh/h | 0 | 97 | 102 | 80 | 88 | 0 | | | | 333 | 0 | 414 |
| Grp Sat Flow(s),veh/h/ln | 0 | 1676 | 1720 | 1681 | 1676 | 0 | | | | 1681 | 0 | 1673 |
| Q Serve(g_s), s | 0.0 | 2.7 | 2.8 | 2.4 | 1.0 | 0.0 | | | | 5.0 | 0.0 | 6.7 |
| Cycle Q Clear(g_c), s | 0.0 | 2.7 | 2.8 | 2.4 | 1.0 | 0.0 | | | | 5.0 | 0.0 | 6.7 |
| Prop In Lane | 0.00 | | 0.15 | 1.00 | | 0.00 | | | | 1.00 | | 0.31 |
| Lane Grp Cap(c), veh/h | 0 | 182 | 187 | 98 | 829 | 0 | | | | 996 | 0 | 992 |
| V/C Ratio(X) | 0.00 | 0.53 | 0.54 | 0.82 | 0.11 | 0.00 | | | | 0.33 | 0.00 | 0.42 |
| Avail Cap(c_a), veh/h | 0 | 536 | 550 | 134 | 1609 | 0 | | | | 996 | 0 | 992 |
| HCM Platoon Ratio | 1.00 | 1.00 | 1.00 | 1.00 | 1.00 | 1.00 | | | | 1.00 | 1.00 | 1.00 |
| Upstream Filter(I) | 0.00 | 1.00 | 1.00 | 0.97 | 0.97 | 0.00 | | | | 1.00 | 0.00 | 1.00 |
| Uniform Delay (d), s/veh | 0.0 | 21.1 | 21.1 | 23.3 | 14.6 | 0.0 | | | | 5.2 | 0.0 | 5.5 |
| Incr Delay (d2), s/veh | 0.0 | 2.4 | 2.4 | 22.6 | 0.1 | 0.0 | | | | 0.9 | 0.0 | 1.3 |
| Initial Q Delay(d3),s/veh | 0.0 | 0.0 | 0.0 | 0.0 | 0.0 | 0.0 | | | | 0.0 | 0.0 | 0.0 |
| %ile BackOfQ(50%),veh/ln | 0.0 | 1.4 | 1.5 | 1.7 | 0.5 | 0.0 | | | | 2.6 | 0.0 | 3.3 |
| LnGrp Delay(d),s/veh | 0.0 | 23.5 | 23.5 | 45.9 | 14.6 | 0.0 | | | | 6.1 | 0.0 | 6.8 |
| LnGrp LOS | | C | C | D | B | | | | | A | | A |
| Approach Vol, veh/h | | 199 | | | 168 | | | | | | 747 | |
| Approach Delay, s/veh | | 23.5 | | | 29.5 | | | | | | 6.5 | |
| Approach LOS | | C | | | C | | | | | | A | |

| Timer | 1 | 2 | 3 | 4 | 5 | 6 | 7 | 8 |
|---|---|---|---|---|---|---|---|---|
| Assigned Phs | | | 3 | 4 | | 6 | | 8 |
| Phs Duration (G+Y+Rc), s | | | 6.9 | 9.4 | | 33.6 | | 16.4 |
| Change Period (Y+Rc), s | | | 4.0 | 4.0 | | 4.0 | | 4.0 |
| Max Green Setting (Gmax), s | | | 4.0 | 16.0 | | 18.0 | | 24.0 |
| Max Q Clear Time (g_c+I1), s | | | 4.4 | 4.8 | | 8.7 | | 3.0 |
| Green Ext Time (p_c), s | | | 0.0 | 0.7 | | 2.6 | | 0.4 |

| Intersection Summary | |
|---|---|
| HCM 2010 Ctrl Delay | 13.0 |
| HCM 2010 LOS | B |

Notes

User approved volume balancing among the lanes for turning movement.

| Lane Group | EBL | EBT | WBT | WBR | NBT | NBR |
|---|---|---|---|---|---|---|
| Lane Group Flow (vph) | 100 | 613 | 158 | 733 | 55 | 54 |
| v/c Ratio | 0.51 | 0.54 | 0.27 | 0.49 | 0.07 | 0.07 |
| Control Delay | 27.4 | 19.6 | 11.6 | 6.4 | 0.9 | 0.9 |
| Queue Delay | 0.0 | 0.0 | 0.0 | 0.0 | 0.0 | 0.0 |
| Total Delay | 27.4 | 19.6 | 11.6 | 6.4 | 0.9 | 0.9 |
| Queue Length 50th (ft) | 30 | 102 | 20 | 212 | 0 | 0 |
| Queue Length 95th (ft) | #76 | 142 | 29 | 284 | 5 | 5 |
| Internal Link Dist (ft) | | 320 | 600 | | 228 | |
| Turn Bay Length (ft) | 160 | | | | | |
| Base Capacity (vph) | 201 | 1743 | 1072 | 1500 | 791 | 772 |
| Starvation Cap Reductn | 0 | 0 | 0 | 0 | 0 | 0 |
| Spillback Cap Reductn | 0 | 0 | 0 | 0 | 0 | 0 |
| Storage Cap Reductn | 0 | 0 | 0 | 0 | 0 | 0 |
| Reduced v/c Ratio | 0.50 | 0.35 | 0.15 | 0.49 | 0.07 | 0.07 |

Intersection Summary

# 95th percentile volume exceeds capacity, queue may be longer.
Queue shown is maximum after two cycles.

| Movement | EBL | EBT | EBR | WBL | WBT | WBR | NBL | NBT | NBR | SBL | SBT | SBR |
|---|---|---|---|---|---|---|---|---|---|---|---|---|
| Lane Configurations | | | | | | | | | | | | |
| Traffic Volume (veh/h) | 92 | 564 | 0 | 0 | 145 | 674 | 11 | 0 | 89 | 0 | 0 | 0 |
| Future Volume (veh/h) | 92 | 564 | 0 | 0 | 145 | 674 | 11 | 0 | 89 | 0 | 0 | 0 |
| Number | 7 | 4 | 14 | 3 | 8 | 18 | 5 | 2 | 12 | | | |
| Initial Q (Qb), veh | 0 | 0 | 0 | 0 | 0 | 0 | 0 | 0 | 0 | | | |
| Ped-Bike Adj(A_pbT) | 1.00 | | 1.00 | 1.00 | | 1.00 | 1.00 | | 1.00 | | | |
| Parking Bus, Adj | 1.00 | 1.00 | 1.00 | 1.00 | 1.00 | 1.00 | 1.00 | 1.00 | 1.00 | | | |
| Adj Sat Flow, veh/h/ln | 1765 | 1765 | 1800 | 0 | 1765 | 1765 | 1800 | 1765 | 1765 | | | |
| Adj Flow Rate, veh/h | 100 | 613 | 0 | 0 | 158 | 0 | 0 | 0 | 110 | | | |
| Adj No. of Lanes | 1 | 2 | 0 | 0 | 2 | 1 | 0 | 1 | 2 | | | |
| Peak Hour Factor | 0.92 | 0.92 | 0.92 | 0.92 | 0.92 | 0.92 | 0.92 | 0.92 | 0.92 | | | |
| Percent Heavy Veh, % | 2 | 2 | 2 | 0 | 2 | 2 | 2 | 2 | 2 | | | |
| Cap, veh/h | 124 | 863 | 0 | 0 | 348 | 156 | 0 | 1028 | 1748 | | | |
| Arrive On Green | 0.15 | 0.51 | 0.00 | 0.00 | 0.07 | 0.00 | 0.00 | 0.00 | 0.58 | | | |
| Sat Flow, veh/h | 1681 | 3441 | 0 | 0 | 3441 | 1500 | 0 | 1765 | 3000 | | | |
| Grp Volume(v), veh/h | 100 | 613 | 0 | 0 | 158 | 0 | 0 | 0 | 110 | | | |
| Grp Sat Flow(s),veh/h/ln | 1681 | 1676 | 0 | 0 | 1676 | 1500 | 0 | 1765 | 1500 | | | |
| Q Serve(g_s), s | 2.9 | 7.0 | 0.0 | 0.0 | 2.3 | 0.0 | 0.0 | 0.0 | 0.8 | | | |
| Cycle Q Clear(g_c), s | 2.9 | 7.0 | 0.0 | 0.0 | 2.3 | 0.0 | 0.0 | 0.0 | 0.8 | | | |
| Prop In Lane | 1.00 | | 0.00 | 0.00 | | 1.00 | 0.00 | | 1.00 | | | |
| Lane Grp Cap(c), veh/h | 124 | 863 | 0 | 0 | 348 | 156 | 0 | 1028 | 1748 | | | |
| V/C Ratio(X) | 0.81 | 0.71 | 0.00 | 0.00 | 0.45 | 0.00 | 0.00 | 0.00 | 0.06 | | | |
| Avail Cap(c_a), veh/h | 202 | 1744 | 0 | 0 | 1073 | 480 | 0 | 1028 | 1748 | | | |
| HCM Platoon Ratio | 2.00 | 2.00 | 2.00 | 1.00 | 0.67 | 0.67 | 1.00 | 1.00 | 1.00 | | | |
| Upstream Filter(I) | 0.95 | 0.95 | 0.00 | 0.00 | 0.94 | 0.00 | 0.00 | 0.00 | 1.00 | | | |
| Uniform Delay (d), s/veh | 21.0 | 10.7 | 0.0 | 0.0 | 21.9 | 0.0 | 0.0 | 0.0 | 4.5 | | | |
| Incr Delay (d2), s/veh | 11.1 | 1.0 | 0.0 | 0.0 | 0.9 | 0.0 | 0.0 | 0.0 | 0.1 | | | |
| Initial Q Delay(d3),s/veh | 0.0 | 0.0 | 0.0 | 0.0 | 0.0 | 0.0 | 0.0 | 0.0 | 0.0 | | | |
| %ile BackOfQ(50%),veh/ln | 1.7 | 3.2 | 0.0 | 0.0 | 1.1 | 0.0 | 0.0 | 0.0 | 0.3 | | | |
| LnGrp Delay(d),s/veh | 32.1 | 11.7 | 0.0 | 0.0 | 22.8 | 0.0 | 0.0 | 0.0 | 4.6 | | | |
| LnGrp LOS | C | B | | | C | | | | A | | | |
| Approach Vol, veh/h | | 713 | | | 158 | | | 110 | | | | |
| Approach Delay, s/veh | | 14.6 | | | 22.8 | | | 4.6 | | | | |
| Approach LOS | | B | | | C | | | A | | | | |

| Timer | 1 | 2 | 3 | 4 | 5 | 6 | 7 | 8 |
|---|---|---|---|---|---|---|---|---|
| Assigned Phs | | 2 | | 4 | | | 7 | 8 |
| Phs Duration (G+Y+Rc), s | | 33.1 | | 16.9 | | | 7.7 | 9.2 |
| Change Period (Y+Rc), s | | 4.0 | | 4.0 | | | 4.0 | 4.0 |
| Max Green Setting (Gmax), s | | 16.0 | | 26.0 | | | 6.0 | 16.0 |
| Max Q Clear Time (g_c+I1), s | | 2.8 | | 9.0 | | | 4.9 | 4.3 |
| Green Ext Time (p_c), s | | 0.3 | | 3.9 | | | 0.0 | 0.6 |

| Intersection Summary | |
|---|---|
| HCM 2010 Ctrl Delay | 14.8 |
| HCM 2010 LOS | B |

Notes

User approved volume balancing among the lanes for turning movement.

| Lane Group | EBL | EBT | WBL | WBT | WBR | NBL | NBT | SBL | SBT |
|---|---|---|---|---|---|---|---|---|---|
| Lane Group Flow (vph) | 159 | 541 | 14 | 541 | 76 | 149 | 59 | 164 | 193 |
| v/c Ratio | 0.43 | 0.48 | 0.04 | 0.33 | 0.14 | 0.48 | 0.11 | 0.40 | 0.32 |
| Control Delay | 30.7 | 18.0 | 31.2 | 25.2 | 6.1 | 33.5 | 18.0 | 30.3 | 7.1 |
| Queue Delay | 0.0 | 0.0 | 0.0 | 0.0 | 0.0 | 0.0 | 0.0 | 0.0 | 0.0 |
| Total Delay | 30.7 | 18.0 | 31.2 | 25.2 | 6.1 | 33.5 | 18.0 | 30.3 | 7.1 |
| Queue Length 50th (ft) | 59 | 99 | 7 | 93 | 0 | 76 | 17 | 81 | 10 |
| Queue Length 95th (ft) | 131 | 152 | 24 | 123 | 31 | 139 | 47 | 142 | 60 |
| Internal Link Dist (ft) | | 600 | | 925 | | | 1078 | | 400 |
| Turn Bay Length (ft) | 130 | | 300 | | 100 | 90 | | 90 | |
| Base Capacity (vph) | 368 | 1129 | 368 | 1638 | 560 | 312 | 549 | 406 | 605 |
| Starvation Cap Reductn | 0 | 0 | 0 | 0 | 0 | 0 | 0 | 0 | 0 |
| Spillback Cap Reductn | 0 | 0 | 0 | 0 | 0 | 0 | 0 | 0 | 0 |
| Storage Cap Reductn | 0 | 0 | 0 | 0 | 0 | 0 | 0 | 0 | 0 |
| Reduced v/c Ratio | 0.43 | 0.48 | 0.04 | 0.33 | 0.14 | 0.48 | 0.11 | 0.40 | 0.32 |

Intersection Summary

| Movement | EBL | EBT | EBR | WBL | WBT | WBR | NBL | NBT | NBR | SBL | SBT | SBR |
|---|---|---|---|---|---|---|---|---|---|---|---|---|
| Lane Configurations | | | | | | | | | | | | |
| Traffic Volume (veh/h) | 146 | 420 | 77 | 13 | 498 | 70 | 137 | 36 | 18 | 151 | 21 | 156 |
| Future Volume (veh/h) | 146 | 420 | 77 | 13 | 498 | 70 | 137 | 36 | 18 | 151 | 21 | 156 |
| Number | 7 | 4 | 14 | 3 | 8 | 18 | 5 | 2 | 12 | 1 | 6 | 16 |
| Initial Q (Qb), veh | 0 | 0 | 0 | 0 | 0 | 0 | 0 | 0 | 0 | 0 | 0 | 0 |
| Ped-Bike Adj(A_pbT) | 1.00 | | 1.00 | 1.00 | | 1.00 | 1.00 | | 1.00 | 1.00 | | 1.00 |
| Parking Bus, Adj | 1.00 | 1.00 | 1.00 | 1.00 | 1.00 | 1.00 | 1.00 | 1.00 | 1.00 | 1.00 | 1.00 | 1.00 |
| Adj Sat Flow, veh/h/ln | 1765 | 1765 | 1800 | 1765 | 1765 | 1765 | 1765 | 1765 | 1800 | 1765 | 1765 | 1800 |
| Adj Flow Rate, veh/h | 159 | 457 | 84 | 14 | 541 | 76 | 149 | 39 | 20 | 164 | 23 | 170 |
| Adj No. of Lanes | 1 | 2 | 0 | 1 | 3 | 1 | 1 | 1 | 0 | 1 | 1 | 0 |
| Peak Hour Factor | 0.92 | 0.92 | 0.92 | 0.92 | 0.92 | 0.92 | 0.92 | 0.92 | 0.92 | 0.92 | 0.92 | 0.92 |
| Percent Heavy Veh, % | 2 | 2 | 2 | 2 | 2 | 2 | 2 | 2 | 2 | 2 | 2 | 2 |
| Cap, veh/h | 370 | 963 | 176 | 370 | 1638 | 510 | 335 | 352 | 181 | 467 | 58 | 430 |
| Arrive On Green | 0.44 | 0.68 | 0.68 | 0.22 | 0.34 | 0.34 | 0.32 | 0.32 | 0.32 | 0.32 | 0.32 | 0.32 |
| Sat Flow, veh/h | 1681 | 2832 | 517 | 1681 | 4818 | 1500 | 1185 | 1101 | 564 | 1338 | 182 | 1345 |
| Grp Volume(v), veh/h | 159 | 269 | 272 | 14 | 541 | 76 | 149 | 0 | 59 | 164 | 0 | 193 |
| Grp Sat Flow(s),veh/h/ln | 1681 | 1676 | 1673 | 1681 | 1606 | 1500 | 1185 | 0 | 1665 | 1338 | 0 | 1527 |
| Q Serve(g_s), s | 6.5 | 7.6 | 7.7 | 0.7 | 8.3 | 3.5 | 11.2 | 0.0 | 2.5 | 9.8 | 0.0 | 9.8 |
| Cycle Q Clear(g_c), s | 6.5 | 7.6 | 7.7 | 0.7 | 8.3 | 3.5 | 21.0 | 0.0 | 2.5 | 12.3 | 0.0 | 9.8 |
| Prop In Lane | 1.00 | | 0.31 | 1.00 | | 1.00 | 1.00 | | 0.34 | 1.00 | | 0.88 |
| Lane Grp Cap(c), veh/h | 370 | 570 | 569 | 370 | 1638 | 510 | 335 | 0 | 533 | 467 | 0 | 489 |
| V/C Ratio(X) | 0.43 | 0.47 | 0.48 | 0.04 | 0.33 | 0.15 | 0.45 | 0.00 | 0.11 | 0.35 | 0.00 | 0.39 |
| Avail Cap(c_a), veh/h | 370 | 570 | 569 | 370 | 1638 | 510 | 335 | 0 | 533 | 467 | 0 | 489 |
| HCM Platoon Ratio | 2.00 | 2.00 | 2.00 | 1.00 | 1.00 | 1.00 | 1.00 | 1.00 | 1.00 | 1.00 | 1.00 | 1.00 |
| Upstream Filter(I) | 1.00 | 1.00 | 1.00 | 1.00 | 1.00 | 1.00 | 1.00 | 0.00 | 1.00 | 1.00 | 0.00 | 1.00 |
| Uniform Delay (d), s/veh | 23.7 | 11.8 | 11.8 | 30.7 | 24.5 | 22.9 | 34.6 | 0.0 | 24.0 | 28.3 | 0.0 | 26.5 |
| Incr Delay (d2), s/veh | 3.6 | 2.8 | 2.9 | 0.2 | 0.5 | 0.6 | 4.2 | 0.0 | 0.4 | 2.1 | 0.0 | 2.4 |
| Initial Q Delay(d3),s/veh | 0.0 | 0.0 | 0.0 | 0.0 | 0.0 | 0.0 | 0.0 | 0.0 | 0.0 | 0.0 | 0.0 | 0.0 |
| %ile BackOfQ(50%),veh/ln | 3.4 | 3.9 | 3.9 | 0.3 | 3.8 | 1.5 | 4.0 | 0.0 | 1.2 | 3.9 | 0.0 | 4.5 |
| LnGrp Delay(d),s/veh | 27.3 | 14.6 | 14.6 | 30.9 | 25.1 | 23.6 | 38.9 | 0.0 | 24.4 | 30.4 | 0.0 | 28.8 |
| LnGrp LOS | C | B | B | C | C | C | D | | C | C | | C |
| Approach Vol, veh/h | | 700 | | | 631 | | | 208 | | | 357 | |
| Approach Delay, s/veh | | 17.5 | | | 25.0 | | | 34.8 | | | 29.6 | |
| Approach LOS | | B | | | C | | | C | | | C | |

| Timer | 1 | 2 | 3 | 4 | 5 | 6 | 7 | 8 |
|---|---|---|---|---|---|---|---|---|
| Assigned Phs | | 2 | 3 | 4 | | 6 | 7 | 8 |
| Phs Duration (G+Y+Rc), s | | 36.0 | 26.0 | 38.0 | | 36.0 | 26.0 | 38.0 |
| Change Period (Y+Rc), s | | 4.0 | 4.0 | 4.0 | | 4.0 | 4.0 | 4.0 |
| Max Green Setting (Gmax), s | | 32.0 | 22.0 | 34.0 | | 32.0 | 22.0 | 34.0 |
| Max Q Clear Time (g_c+I1), s | | 23.0 | 2.7 | 9.7 | | 14.3 | 8.5 | 10.3 |
| Green Ext Time (p_c), s | | 0.5 | 0.0 | 3.4 | | 1.6 | 0.3 | 4.1 |

| Intersection Summary | |
|---|---|
| HCM 2010 Ctrl Delay | 24.2 |
| HCM 2010 LOS | C |

| Intersection | |
|---|---|
| Intersection Delay, s/veh | 4.2 |
| Intersection LOS | A |

| Approach | EB | WB | SB |
|---|---|---|---|
| Entry Lanes | 1 | 1 | 1 |
| Conflicting Circle Lanes | 1 | 1 | 1 |
| Adj Approach Flow, veh/h | 137 | 83 | 38 |
| Demand Flow Rate, veh/h | 140 | 85 | 39 |
| Vehicles Circulating, veh/h | 39 | 9 | 38 |
| Vehicles Exiting, veh/h | 38 | 170 | 56 |
| Follow-Up Headway, s | 3.186 | 3.186 | 3.186 |
| Ped Vol Crossing Leg, #/h | 0 | 0 | 0 |
| Ped Cap Adj | 1.000 | 1.000 | 1.000 |
| Approach Delay, s/veh | 4.5 | 3.9 | 3.7 |
| Approach LOS | A | A | A |

| Lane | Left | Left | Left |
|---|---|---|---|
| Designated Moves | LT | TR | LR |
| Assumed Moves | LT | TR | LR |
| RT Channelized | | | |
| Lane Util | 1.000 | 1.000 | 1.000 |
| Critical Headway, s | 5.193 | 5.193 | 5.193 |
| Entry Flow, veh/h | 140 | 85 | 39 |
| Cap Entry Lane, veh/h | 1087 | 1120 | 1088 |
| Entry HV Adj Factor | 0.982 | 0.979 | 0.974 |
| Flow Entry, veh/h | 137 | 83 | 38 |
| Cap Entry, veh/h | 1067 | 1097 | 1060 |
| V/C Ratio | 0.129 | 0.076 | 0.036 |
| Control Delay, s/veh | 4.5 | 3.9 | 3.7 |
| LOS | A | A | A |
| 95th %tile Queue, veh | 0 | 0 | 0 |

| Intersection | |
|---|---|
| Int Delay, s/veh | 0.1 |

| Movement | EBT | EBR | WBL | WBT | NBL | NBR |
|---|---|---|---|---|---|---|
| Lane Configurations | | | | | | |
| Traffic Vol, veh/h | 492 | 2 | 2 | 615 | 3 | 3 |
| Future Vol, veh/h | 492 | 2 | 2 | 615 | 3 | 3 |
| Conflicting Peds, #/hr | 0 | 0 | 0 | 0 | 0 | 0 |
| Sign Control | Free | Free | Free | Free | Stop | Stop |
| RT Channelized | - | None | - | None | - | None |
| Storage Length | - | - | 90 | - | 0 | - |
| Veh in Median Storage, # | 0 | - | - | 0 | 0 | - |
| Grade, % | 0 | - | - | 0 | 0 | - |
| Peak Hour Factor | 92 | 92 | 92 | 92 | 92 | 92 |
| Heavy Vehicles, % | 2 | 2 | 2 | 2 | 2 | 2 |
| Mvmt Flow | 535 | 2 | 2 | 668 | 3 | 3 |

| Major/Minor | Major1 | | Major2 | | Minor1 | |
|---|---|---|---|---|---|---|
| Conflicting Flow All | 0 | 0 | 537 | 0 | 807 | 269 |
| Stage 1 | - | - | - | - | 536 | - |
| Stage 2 | - | - | - | - | 271 | - |
| Critical Hdwy | - | - | 5.34 | - | 5.74 | 7.14 |
| Critical Hdwy Stg 1 | - | - | - | - | 6.64 | - |
| Critical Hdwy Stg 2 | - | - | - | - | 6.04 | - |
| Follow-up Hdwy | - | - | 3.12 | - | 3.82 | 3.92 |
| Pot Cap-1 Maneuver | - | - | 651 | - | 387 | 621 |
| Stage 1 | - | - | - | - | 460 | - |
| Stage 2 | - | - | - | - | 688 | - |
| Platoon blocked, % | - | - | | - | | |
| Mov Cap-1 Maneuver | - | - | 651 | - | 386 | 621 |
| Mov Cap-2 Maneuver | - | - | - | - | 386 | - |
| Stage 1 | - | - | - | - | 459 | - |
| Stage 2 | - | - | - | - | 688 | - |

| Approach | EB | WB | NB |
|---|---|---|---|
| HCM Control Delay, s | 0 | 0 | 12.7 |
| HCM LOS | | | B |

| Minor Lane/Major Mvmt | NBLn1 | EBT | EBR | WBL | WBT |
|---|---|---|---|---|---|
| Capacity (veh/h) | 476 | - | - | 651 | - |
| HCM Lane V/C Ratio | 0.014 | - | - | 0.003 | - |
| HCM Control Delay (s) | 12.7 | - | - | 10.5 | - |
| HCM Lane LOS | B | - | - | B | - |
| HCM 95th %tile Q(veh) | 0 | - | - | 0 | - |

| Intersection | |
|---|---|
| Int Delay, s/veh | 0.1 |

| Movement | EBL | EBT | WBT | WBR | SBL | SBR |
|---|---|---|---|---|---|---|
| Lane Configurations | | | | | | |
| Traffic Vol, veh/h | 6 | 480 | 626 | 4 | 1 | 3 |
| Future Vol, veh/h | 6 | 480 | 626 | 4 | 1 | 3 |
| Conflicting Peds, #/hr | 0 | 0 | 0 | 0 | 0 | 0 |
| Sign Control | Free | Free | Free | Free | Stop | Stop |
| RT Channelized | - | None | - | None | - | None |
| Storage Length | 90 | - | - | - | 0 | - |
| Veh in Median Storage, # | - | 0 | 0 | - | 0 | - |
| Grade, % | - | 0 | 0 | - | 0 | - |
| Peak Hour Factor | 92 | 92 | 92 | 92 | 92 | 92 |
| Heavy Vehicles, % | 2 | 2 | 2 | 2 | 2 | 2 |
| Mvmt Flow | 7 | 522 | 680 | 4 | 1 | 3 |

| Major/Minor | Major1 | | Major2 | | Minor2 | |
|---|---|---|---|---|---|---|
| Conflicting Flow All | 684 | 0 | - | 0 | 905 | 342 |
| Stage 1 | - | - | - | - | 682 | - |
| Stage 2 | - | - | - | - | 223 | - |
| Critical Hdwy | 5.34 | - | - | - | 5.74 | 7.14 |
| Critical Hdwy Stg 1 | - | - | - | - | 6.64 | - |
| Critical Hdwy Stg 2 | - | - | - | - | 6.04 | - |
| Follow-up Hdwy | 3.12 | - | - | - | 3.82 | 3.92 |
| Pot Cap-1 Maneuver | 554 | - | - | - | 346 | 558 |
| Stage 1 | - | - | - | - | 376 | - |
| Stage 2 | - | - | - | - | 728 | - |
| Platoon blocked, % | | - | - | - | | |
| Mov Cap-1 Maneuver | 554 | - | - | - | 342 | 558 |
| Mov Cap-2 Maneuver | - | - | - | - | 342 | - |
| Stage 1 | - | - | - | - | 371 | - |
| Stage 2 | - | - | - | - | 728 | - |

| Approach | EB | WB | SB |
|---|---|---|---|
| HCM Control Delay, s | 0.1 | 0 | 12.5 |
| HCM LOS | | | B |

| Minor Lane/Major Mvmt | EBL | EBT | WBT | WBR | SBLn1 |
|---|---|---|---|---|---|
| Capacity (veh/h) | 554 | - | - | - | 482 |
| HCM Lane V/C Ratio | 0.012 | - | - | - | 0.009 |
| HCM Control Delay (s) | 11.6 | - | - | - | 12.5 |
| HCM Lane LOS | B | - | - | - | B |
| HCM 95th %tile Q(veh) | 0 | - | - | - | 0 |

# Queues
## 3: I-10 EB & Yucaipa Blvd

12/19/2018

| Lane Group | EBT | WBL | WBT | SBL | SBT |
|---|---|---|---|---|---|
| Lane Group Flow (vph) | 168 | 108 | 66 | 808 | 769 |
| v/c Ratio | 0.43 | 0.86 | 0.08 | 0.77 | 0.75 |
| Control Delay | 35.3 | 90.8 | 23.0 | 16.7 | 14.3 |
| Queue Delay | 0.0 | 0.0 | 0.0 | 0.0 | 0.0 |
| Total Delay | 35.3 | 90.8 | 23.0 | 16.7 | 14.3 |
| Queue Length 50th (ft) | 41 | 55 | 13 | 255 | 208 |
| Queue Length 95th (ft) | 68 | #146 | 27 | #500 | 413 |
| Internal Link Dist (ft) | 117 | | 320 | | 250 |
| Turn Bay Length (ft) | | 115 | | | |
| Base Capacity (vph) | 670 | 125 | 1089 | 1049 | 1032 |
| Starvation Cap Reductn | 0 | 0 | 0 | 0 | 0 |
| Spillback Cap Reductn | 0 | 0 | 0 | 0 | 0 |
| Storage Cap Reductn | 0 | 0 | 0 | 0 | 0 |
| Reduced v/c Ratio | 0.25 | 0.86 | 0.06 | 0.77 | 0.75 |

### Intersection Summary

# 95th percentile volume exceeds capacity, queue may be longer.
Queue shown is maximum after two cycles.

| Movement | EBL | EBT | EBR | WBL | WBT | WBR | NBL | NBT | NBR | SBL | SBT | SBR |
|---|---|---|---|---|---|---|---|---|---|---|---|---|
| Lane Configurations | | | | | | | | | | | | |
| Traffic Volume (veh/h) | 0 | 150 | 5 | 99 | 61 | 0 | 0 | 0 | 0 | 1126 | 10 | 315 |
| Future Volume (veh/h) | 0 | 150 | 5 | 99 | 61 | 0 | 0 | 0 | 0 | 1126 | 10 | 315 |
| Number | 7 | 4 | 14 | 3 | 8 | 18 | | | | 1 | 6 | 16 |
| Initial Q (Qb), veh | 0 | 0 | 0 | 0 | 0 | 0 | | | | 0 | 0 | 0 |
| Ped-Bike Adj(A_pbT) | 1.00 | | 1.00 | 1.00 | | 1.00 | | | | 1.00 | | 1.00 |
| Parking Bus, Adj | 1.00 | 1.00 | 1.00 | 1.00 | 1.00 | 1.00 | | | | 1.00 | 1.00 | 1.00 |
| Adj Sat Flow, veh/h/ln | 0 | 1765 | 1800 | 1765 | 1765 | 0 | | | | 1765 | 1765 | 1800 |
| Adj Flow Rate, veh/h | 0 | 163 | 5 | 108 | 66 | 0 | | | | 788 | 621 | 342 |
| Adj No. of Lanes | 0 | 2 | 0 | 1 | 2 | 0 | | | | 1 | 1 | 0 |
| Peak Hour Factor | 0.92 | 0.92 | 0.92 | 0.92 | 0.92 | 0.92 | | | | 0.92 | 0.92 | 0.92 |
| Percent Heavy Veh, % | 0 | 2 | 2 | 2 | 2 | 0 | | | | 2 | 2 | 2 |
| Cap, veh/h | 0 | 263 | 8 | 126 | 685 | 0 | | | | 1169 | 745 | 410 |
| Arrive On Green | 0.00 | 0.08 | 0.08 | 0.08 | 0.20 | 0.00 | | | | 0.70 | 0.70 | 0.70 |
| Sat Flow, veh/h | 0 | 3410 | 102 | 1681 | 3441 | 0 | | | | 1681 | 1071 | 590 |
| Grp Volume(v), veh/h | 0 | 82 | 86 | 108 | 66 | 0 | | | | 788 | 0 | 963 |
| Grp Sat Flow(s),veh/h/ln | 0 | 1676 | 1747 | 1681 | 1676 | 0 | | | | 1681 | 0 | 1661 |
| Q Serve(g_s), s | 0.0 | 3.8 | 3.8 | 5.1 | 1.3 | 0.0 | | | | 21.5 | 0.0 | 33.6 |
| Cycle Q Clear(g_c), s | 0.0 | 3.8 | 3.8 | 5.1 | 1.3 | 0.0 | | | | 21.5 | 0.0 | 33.6 |
| Prop In Lane | 0.00 | | 0.06 | 1.00 | | 0.00 | | | | 1.00 | | 0.36 |
| Lane Grp Cap(c), veh/h | 0 | 133 | 138 | 126 | 685 | 0 | | | | 1169 | 0 | 1155 |
| V/C Ratio(X) | 0.00 | 0.62 | 0.62 | 0.86 | 0.10 | 0.00 | | | | 0.67 | 0.00 | 0.83 |
| Avail Cap(c_a), veh/h | 0 | 335 | 349 | 126 | 1090 | 0 | | | | 1169 | 0 | 1155 |
| HCM Platoon Ratio | 1.00 | 1.00 | 1.00 | 1.00 | 1.00 | 1.00 | | | | 1.00 | 1.00 | 1.00 |
| Upstream Filter(I) | 0.00 | 1.00 | 1.00 | 1.00 | 1.00 | 0.00 | | | | 1.00 | 0.00 | 1.00 |
| Uniform Delay (d), s/veh | 0.0 | 35.7 | 35.7 | 36.6 | 25.8 | 0.0 | | | | 7.0 | 0.0 | 8.8 |
| Incr Delay (d2), s/veh | 0.0 | 4.6 | 4.5 | 40.5 | 0.1 | 0.0 | | | | 3.1 | 0.0 | 7.1 |
| Initial Q Delay(d3),s/veh | 0.0 | 0.0 | 0.0 | 0.0 | 0.0 | 0.0 | | | | 0.0 | 0.0 | 0.0 |
| %ile BackOfQ(50%),veh/ln | 0.0 | 1.9 | 2.0 | 3.8 | 0.6 | 0.0 | | | | 10.9 | 0.0 | 17.3 |
| LnGrp Delay(d),s/veh | 0.0 | 40.3 | 40.2 | 77.1 | 25.9 | 0.0 | | | | 10.1 | 0.0 | 15.9 |
| LnGrp LOS | | D | D | E | C | | | | | B | | B |
| Approach Vol, veh/h | | 168 | | | 174 | | | | | | 1751 | |
| Approach Delay, s/veh | | 40.2 | | | 57.7 | | | | | | 13.3 | |
| Approach LOS | | D | | | E | | | | | | B | |

| Timer | 1 | 2 | 3 | 4 | 5 | 6 | 7 | 8 |
|---|---|---|---|---|---|---|---|---|
| Assigned Phs | | | 3 | 4 | | 6 | | 8 |
| Phs Duration (G+Y+Rc), s | | | 10.0 | 10.3 | | 59.7 | | 20.3 |
| Change Period (Y+Rc), s | | | 4.0 | 4.0 | | 4.0 | | 4.0 |
| Max Green Setting (Gmax), s | | | 6.0 | 16.0 | | 46.0 | | 26.0 |
| Max Q Clear Time (g_c+I1), s | | | 7.1 | 5.8 | | 35.6 | | 3.3 |
| Green Ext Time (p_c), s | | | 0.0 | 0.6 | | 7.2 | | 0.3 |

| Intersection Summary | |
|---|---|
| HCM 2010 Ctrl Delay | 19.1 |
| HCM 2010 LOS | B |

Notes

User approved volume balancing among the lanes for turning movement.

| Lane Group | EBL | EBT | WBT | WBR | NBT | NBR |
|---|---|---|---|---|---|---|
| Lane Group Flow (vph) | 111 | 1267 | 161 | 805 | 86 | 86 |
| v/c Ratio | 0.56 | 0.76 | 0.14 | 0.54 | 0.15 | 0.15 |
| Control Delay | 34.0 | 13.6 | 6.7 | 6.5 | 3.2 | 3.2 |
| Queue Delay | 0.0 | 0.0 | 0.0 | 0.0 | 0.0 | 0.0 |
| Total Delay | 34.0 | 13.6 | 6.7 | 6.5 | 3.2 | 3.2 |
| Queue Length 50th (ft) | 31 | 134 | 15 | 225 | 0 | 0 |
| Queue Length 95th (ft) | #84 | 198 | m24 | 295 | 18 | 18 |
| Internal Link Dist (ft) | | 320 | 600 | | 228 | |
| Turn Bay Length (ft) | 160 | | | | | |
| Base Capacity (vph) | 201 | 1743 | 1136 | 1500 | 570 | 561 |
| Starvation Cap Reductn | 0 | 7 | 0 | 0 | 0 | 0 |
| Spillback Cap Reductn | 0 | 0 | 0 | 0 | 0 | 0 |
| Storage Cap Reductn | 0 | 0 | 0 | 0 | 0 | 0 |
| Reduced v/c Ratio | 0.55 | 0.73 | 0.14 | 0.54 | 0.15 | 0.15 |

Intersection Summary

# 95th percentile volume exceeds capacity, queue may be longer.
Queue shown is maximum after two cycles.

m Volume for 95th percentile queue is metered by upstream signal.

| Movement | EBL | EBT | EBR | WBL | WBT | WBR | NBL | NBT | NBR | SBL | SBT | SBR |
|---|---|---|---|---|---|---|---|---|---|---|---|---|
| Lane Configurations | | | | | | | | | | | | |
| Traffic Volume (veh/h) | 102 | 1166 | 0 | 0 | 148 | 741 | 12 | 0 | 146 | 0 | 0 | 0 |
| Future Volume (veh/h) | 102 | 1166 | 0 | 0 | 148 | 741 | 12 | 0 | 146 | 0 | 0 | 0 |
| Number | 7 | 4 | 14 | 3 | 8 | 18 | 5 | 2 | 12 | | | |
| Initial Q (Qb), veh | 0 | 0 | 0 | 0 | 0 | 0 | 0 | 0 | 0 | | | |
| Ped-Bike Adj(A_pbT) | 1.00 | | 1.00 | 1.00 | | 1.00 | 1.00 | | 1.00 | | | |
| Parking Bus, Adj | 1.00 | 1.00 | 1.00 | 1.00 | 1.00 | 1.00 | 1.00 | 1.00 | 1.00 | | | |
| Adj Sat Flow, veh/h/ln | 1765 | 1765 | 1800 | 0 | 1765 | 1765 | 1800 | 1765 | 1765 | | | |
| Adj Flow Rate, veh/h | 111 | 1267 | 0 | 0 | 161 | 0 | 0 | 0 | 173 | | | |
| Adj No. of Lanes | 1 | 2 | 0 | 0 | 2 | 1 | 0 | 1 | 2 | | | |
| Peak Hour Factor | 0.92 | 0.92 | 0.92 | 0.92 | 0.92 | 0.92 | 0.92 | 0.92 | 0.92 | | | |
| Percent Heavy Veh, % | 2 | 2 | 2 | 0 | 2 | 2 | 2 | 2 | 2 | | | |
| Cap, veh/h | 139 | 1559 | 0 | 0 | 1014 | 454 | 0 | 662 | 1125 | | | |
| Arrive On Green | 0.08 | 0.47 | 0.00 | 0.00 | 0.40 | 0.00 | 0.00 | 0.00 | 0.37 | | | |
| Sat Flow, veh/h | 1681 | 3441 | 0 | 0 | 3441 | 1500 | 0 | 1765 | 3000 | | | |
| Grp Volume(v), veh/h | 111 | 1267 | 0 | 0 | 161 | 0 | 0 | 0 | 173 | | | |
| Grp Sat Flow(s),veh/h/ln | 1681 | 1676 | 0 | 0 | 1676 | 1500 | 0 | 1765 | 1500 | | | |
| Q Serve(g_s), s | 3.2 | 16.2 | 0.0 | 0.0 | 1.5 | 0.0 | 0.0 | 0.0 | 1.9 | | | |
| Cycle Q Clear(g_c), s | 3.2 | 16.2 | 0.0 | 0.0 | 1.5 | 0.0 | 0.0 | 0.0 | 1.9 | | | |
| Prop In Lane | 1.00 | | 0.00 | 0.00 | | 1.00 | 0.00 | | 1.00 | | | |
| Lane Grp Cap(c), veh/h | 139 | 1559 | 0 | 0 | 1014 | 454 | 0 | 662 | 1125 | | | |
| V/C Ratio(X) | 0.80 | 0.81 | 0.00 | 0.00 | 0.16 | 0.00 | 0.00 | 0.00 | 0.15 | | | |
| Avail Cap(c_a), veh/h | 202 | 1744 | 0 | 0 | 1073 | 480 | 0 | 662 | 1125 | | | |
| HCM Platoon Ratio | 1.00 | 1.00 | 1.00 | 1.00 | 1.33 | 1.33 | 1.00 | 1.00 | 1.00 | | | |
| Upstream Filter(I) | 0.63 | 0.63 | 0.00 | 0.00 | 0.91 | 0.00 | 0.00 | 0.00 | 1.00 | | | |
| Uniform Delay (d), s/veh | 22.5 | 11.5 | 0.0 | 0.0 | 10.9 | 0.0 | 0.0 | 0.0 | 10.4 | | | |
| Incr Delay (d2), s/veh | 8.8 | 1.8 | 0.0 | 0.0 | 0.1 | 0.0 | 0.0 | 0.0 | 0.3 | | | |
| Initial Q Delay(d3),s/veh | 0.0 | 0.0 | 0.0 | 0.0 | 0.0 | 0.0 | 0.0 | 0.0 | 0.0 | | | |
| %ile BackOfQ(50%),veh/ln | 1.8 | 7.8 | 0.0 | 0.0 | 0.7 | 0.0 | 0.0 | 0.0 | 0.8 | | | |
| LnGrp Delay(d),s/veh | 31.3 | 13.3 | 0.0 | 0.0 | 11.0 | 0.0 | 0.0 | 0.0 | 10.7 | | | |
| LnGrp LOS | C | B | | | B | | | | B | | | |
| Approach Vol, veh/h | | 1378 | | | 161 | | | 173 | | | | |
| Approach Delay, s/veh | | 14.7 | | | 11.0 | | | 10.7 | | | | |
| Approach LOS | | B | | | B | | | B | | | | |

| Timer | 1 | 2 | 3 | 4 | 5 | 6 | 7 | 8 |
|---|---|---|---|---|---|---|---|---|
| Assigned Phs | | 2 | | 4 | | | 7 | 8 |
| Phs Duration (G+Y+Rc), s | | 22.7 | | 27.3 | | | 8.1 | 19.1 |
| Change Period (Y+Rc), s | | 4.0 | | 4.0 | | | 4.0 | 4.0 |
| Max Green Setting (Gmax), s | | 16.0 | | 26.0 | | | 6.0 | 16.0 |
| Max Q Clear Time (g_c+I1), s | | 3.9 | | 18.2 | | | 5.2 | 3.5 |
| Green Ext Time (p_c), s | | 0.5 | | 5.0 | | | 0.0 | 0.7 |

| Intersection Summary | |
|---|---|
| HCM 2010 Ctrl Delay | 14.0 |
| HCM 2010 LOS | B |

Notes

User approved volume balancing among the lanes for turning movement.

| Lane Group | EBL | EBT | WBL | WBT | WBR | NBL | NBT | SBL | SBT |
|---|---|---|---|---|---|---|---|---|---|
| Lane Group Flow (vph) | 178 | 1248 | 77 | 543 | 49 | 195 | 100 | 113 | 220 |
| v/c Ratio | 0.48 | 1.11 | 0.21 | 0.33 | 0.09 | 0.67 | 0.18 | 0.29 | 0.35 |
| Control Delay | 29.9 | 87.9 | 33.7 | 25.2 | 6.0 | 42.8 | 11.7 | 28.0 | 7.0 |
| Queue Delay | 0.0 | 0.0 | 0.0 | 0.0 | 0.0 | 0.0 | 0.0 | 0.0 | 0.0 |
| Total Delay | 29.9 | 87.9 | 33.7 | 25.2 | 6.0 | 42.8 | 11.7 | 28.0 | 7.0 |
| Queue Length 50th (ft) | 72 | ~449 | 40 | 93 | 0 | 107 | 16 | 54 | 11 |
| Queue Length 95th (ft) | m115 | #594 | 81 | 124 | 22 | #206 | 54 | 101 | 63 |
| Internal Link Dist (ft) | | 600 | | 925 | | | 1078 | | 400 |
| Turn Bay Length (ft) | 130 | | 300 | | 100 | 90 | | 90 | |
| Base Capacity (vph) | 368 | 1128 | 368 | 1638 | 546 | 290 | 553 | 390 | 622 |
| Starvation Cap Reductn | 0 | 0 | 0 | 0 | 0 | 0 | 0 | 0 | 0 |
| Spillback Cap Reductn | 0 | 0 | 0 | 0 | 0 | 0 | 0 | 0 | 0 |
| Storage Cap Reductn | 0 | 0 | 0 | 0 | 0 | 0 | 0 | 0 | 0 |
| Reduced v/c Ratio | 0.48 | 1.11 | 0.21 | 0.33 | 0.09 | 0.67 | 0.18 | 0.29 | 0.35 |

Intersection Summary

~ Volume exceeds capacity, queue is theoretically infinite.
Queue shown is maximum after two cycles.

# 95th percentile volume exceeds capacity, queue may be longer.
Queue shown is maximum after two cycles.

m Volume for 95th percentile queue is metered by upstream signal.

| Movement | EBL | EBT | EBR | WBL | WBT | WBR | NBL | NBT | NBR | SBL | SBT | SBR |
|---|---|---|---|---|---|---|---|---|---|---|---|---|
| Lane Configurations | | | | | | | | | | | | |
| Traffic Volume (veh/h) | 164 | 950 | 198 | 71 | 500 | 45 | 179 | 34 | 58 | 104 | 23 | 179 |
| Future Volume (veh/h) | 164 | 950 | 198 | 71 | 500 | 45 | 179 | 34 | 58 | 104 | 23 | 179 |
| Number | 7 | 4 | 14 | 3 | 8 | 18 | 5 | 2 | 12 | 1 | 6 | 16 |
| Initial Q (Qb), veh | 0 | 0 | 0 | 0 | 0 | 0 | 0 | 0 | 0 | 0 | 0 | 0 |
| Ped-Bike Adj(A_pbT) | 1.00 | | 1.00 | 1.00 | | 1.00 | 1.00 | | 1.00 | 1.00 | | 1.00 |
| Parking Bus, Adj | 1.00 | 1.00 | 1.00 | 1.00 | 1.00 | 1.00 | 1.00 | 1.00 | 1.00 | 1.00 | 1.00 | 1.00 |
| Adj Sat Flow, veh/h/ln | 1765 | 1765 | 1800 | 1765 | 1765 | 1765 | 1765 | 1765 | 1800 | 1765 | 1765 | 1800 |
| Adj Flow Rate, veh/h | 178 | 1033 | 215 | 77 | 543 | 49 | 195 | 37 | 63 | 113 | 25 | 195 |
| Adj No. of Lanes | 1 | 2 | 0 | 1 | 3 | 1 | 1 | 1 | 0 | 1 | 1 | 0 |
| Peak Hour Factor | 0.92 | 0.92 | 0.92 | 0.92 | 0.92 | 0.92 | 0.92 | 0.92 | 0.92 | 0.92 | 0.92 | 0.92 |
| Percent Heavy Veh, % | 2 | 2 | 2 | 2 | 2 | 2 | 2 | 2 | 2 | 2 | 2 | 2 |
| Cap, veh/h | 370 | 940 | 195 | 370 | 1638 | 510 | 310 | 188 | 320 | 426 | 55 | 433 |
| Arrive On Green | 0.15 | 0.23 | 0.23 | 0.22 | 0.34 | 0.34 | 0.32 | 0.32 | 0.32 | 0.32 | 0.32 | 0.32 |
| Sat Flow, veh/h | 1681 | 2766 | 574 | 1681 | 4818 | 1500 | 1156 | 588 | 1001 | 1290 | 173 | 1353 |
| Grp Volume(v), veh/h | 178 | 625 | 623 | 77 | 543 | 49 | 195 | 0 | 100 | 113 | 0 | 220 |
| Grp Sat Flow(s),veh/h/ln | 1681 | 1676 | 1663 | 1681 | 1606 | 1500 | 1156 | 0 | 1588 | 1290 | 0 | 1526 |
| Q Serve(g_s), s | 9.7 | 34.0 | 34.0 | 3.7 | 8.4 | 2.2 | 16.1 | 0.0 | 4.6 | 7.0 | 0.0 | 11.5 |
| Cycle Q Clear(g_c), s | 9.7 | 34.0 | 34.0 | 3.7 | 8.4 | 2.2 | 27.6 | 0.0 | 4.6 | 11.5 | 0.0 | 11.5 |
| Prop In Lane | 1.00 | | 0.35 | 1.00 | | 1.00 | 1.00 | | 0.63 | 1.00 | | 0.89 |
| Lane Grp Cap(c), veh/h | 370 | 570 | 566 | 370 | 1638 | 510 | 310 | 0 | 508 | 426 | 0 | 488 |
| V/C Ratio(X) | 0.48 | 1.10 | 1.10 | 0.21 | 0.33 | 0.10 | 0.63 | 0.00 | 0.20 | 0.27 | 0.00 | 0.45 |
| Avail Cap(c_a), veh/h | 370 | 570 | 566 | 370 | 1638 | 510 | 310 | 0 | 508 | 426 | 0 | 488 |
| HCM Platoon Ratio | 0.67 | 0.67 | 0.67 | 1.00 | 1.00 | 1.00 | 1.00 | 1.00 | 1.00 | 1.00 | 1.00 | 1.00 |
| Upstream Filter(I) | 1.00 | 1.00 | 1.00 | 1.00 | 1.00 | 1.00 | 1.00 | 0.00 | 1.00 | 1.00 | 0.00 | 1.00 |
| Uniform Delay (d), s/veh | 37.4 | 38.6 | 38.6 | 31.9 | 24.5 | 22.5 | 38.0 | 0.0 | 24.7 | 28.9 | 0.0 | 27.0 |
| Incr Delay (d2), s/veh | 4.4 | 66.8 | 68.7 | 1.3 | 0.5 | 0.4 | 9.4 | 0.0 | 0.9 | 1.5 | 0.0 | 3.0 |
| Initial Q Delay(d3),s/veh | 0.0 | 0.0 | 0.0 | 0.0 | 0.0 | 0.0 | 0.0 | 0.0 | 0.0 | 0.0 | 0.0 | 0.0 |
| %ile BackOfQ(50%),veh/ln | 5.0 | 26.3 | 26.4 | 1.9 | 3.8 | 1.0 | 6.0 | 0.0 | 2.1 | 2.7 | 0.0 | 5.2 |
| LnGrp Delay(d),s/veh | 41.8 | 105.4 | 107.3 | 33.2 | 25.1 | 22.9 | 47.3 | 0.0 | 25.5 | 30.4 | 0.0 | 30.0 |
| LnGrp LOS | D | F | F | C | C | C | D | | C | C | | C |
| Approach Vol, veh/h | | 1426 | | | 669 | | | 295 | | | 333 | |
| Approach Delay, s/veh | | 98.3 | | | 25.9 | | | 39.9 | | | 30.1 | |
| Approach LOS | | F | | | C | | | D | | | C | |

| Timer | 1 | 2 | 3 | 4 | 5 | 6 | 7 | 8 |
|---|---|---|---|---|---|---|---|---|
| Assigned Phs | | 2 | 3 | 4 | | 6 | 7 | 8 |
| Phs Duration (G+Y+Rc), s | | 36.0 | 26.0 | 38.0 | | 36.0 | 26.0 | 38.0 |
| Change Period (Y+Rc), s | | 4.0 | 4.0 | 4.0 | | 4.0 | 4.0 | 4.0 |
| Max Green Setting (Gmax), s | | 32.0 | 22.0 | 34.0 | | 32.0 | 22.0 | 34.0 |
| Max Q Clear Time (g_c+I1), s | | 29.6 | 5.7 | 36.0 | | 13.5 | 11.7 | 10.4 |
| Green Ext Time (p_c), s | | 0.3 | 0.1 | 0.0 | | 1.6 | 0.3 | 4.0 |

| Intersection Summary | |
|---|---|
| HCM 2010 Ctrl Delay | 65.8 |
| HCM 2010 LOS | E |

| Intersection | |
|---|---|
| Intersection Delay, s/veh | 4.6 |
| Intersection LOS | A |

| Approach | EB | WB | SB |
|---|---|---|---|
| Entry Lanes | 1 | 1 | 1 |
| Conflicting Circle Lanes | 1 | 1 | 1 |
| Adj Approach Flow, veh/h | 77 | 168 | 112 |
| Demand Flow Rate, veh/h | 79 | 172 | 114 |
| Vehicles Circulating, veh/h | 104 | 0 | 131 |
| Vehicles Exiting, veh/h | 141 | 183 | 41 |
| Follow-Up Headway, s | 3.186 | 3.186 | 3.186 |
| Ped Vol Crossing Leg, #/h | 0 | 0 | 0 |
| Ped Cap Adj | 1.000 | 1.000 | 1.000 |
| Approach Delay, s/veh | 4.3 | 4.6 | 4.8 |
| Approach LOS | A | A | A |

| Lane | Left | Left | Left |
|---|---|---|---|
| Designated Moves | LT | TR | LR |
| Assumed Moves | LT | TR | LR |
| RT Channelized | | | |
| Lane Util | 1.000 | 1.000 | 1.000 |
| Critical Headway, s | 5.193 | 5.193 | 5.193 |
| Entry Flow, veh/h | 79 | 172 | 114 |
| Cap Entry Lane, veh/h | 1018 | 1130 | 991 |
| Entry HV Adj Factor | 0.980 | 0.979 | 0.982 |
| Flow Entry, veh/h | 77 | 168 | 112 |
| Cap Entry, veh/h | 998 | 1106 | 974 |
| V/C Ratio | 0.078 | 0.152 | 0.115 |
| Control Delay, s/veh | 4.3 | 4.6 | 4.8 |
| LOS | A | A | A |
| 95th %tile Queue, veh | 0 | 1 | 0 |

| Intersection | |
|---|---|
| Int Delay, s/veh | 0 |

| Movement | EBT | EBR | WBL | WBT | NBL | NBR |
|---|---|---|---|---|---|---|
| Lane Configurations | | | | | | |
| Traffic Vol, veh/h | 1010 | 2 | 2 | 700 | 1 | 1 |
| Future Vol, veh/h | 1010 | 2 | 2 | 700 | 1 | 1 |
| Conflicting Peds, #/hr | 0 | 0 | 0 | 0 | 0 | 0 |
| Sign Control | Free | Free | Free | Free | Stop | Stop |
| RT Channelized | - | None | - | None | - | None |
| Storage Length | - | - | 90 | - | 0 | - |
| Veh in Median Storage, # | 0 | - | - | 0 | 0 | - |
| Grade, % | 0 | - | - | 0 | 0 | - |
| Peak Hour Factor | 92 | 92 | 92 | 92 | 92 | 92 |
| Heavy Vehicles, % | 2 | 2 | 2 | 2 | 2 | 2 |
| Mvmt Flow | 1098 | 2 | 2 | 761 | 1 | 1 |

| Major/Minor | Major1 | | Major2 | | Minor1 | |
|---|---|---|---|---|---|---|
| Conflicting Flow All | 0 | 0 | 1100 | 0 | 1407 | 550 |
| Stage 1 | - | - | - | - | 1099 | - |
| Stage 2 | - | - | - | - | 308 | - |
| Critical Hdwy | - | - | 5.34 | - | 5.74 | 7.14 |
| Critical Hdwy Stg 1 | - | - | - | - | 6.64 | - |
| Critical Hdwy Stg 2 | - | - | - | - | 6.04 | - |
| Follow-up Hdwy | - | - | 3.12 | - | 3.82 | 3.92 |
| Pot Cap-1 Maneuver | - | - | 350 | - | 193 | 410 |
| Stage 1 | - | - | - | - | 210 | - |
| Stage 2 | - | - | - | - | 659 | - |
| Platoon blocked, % | - | - | | - | | |
| Mov Cap-1 Maneuver | - | - | 350 | - | 192 | 410 |
| Mov Cap-2 Maneuver | - | - | - | - | 192 | - |
| Stage 1 | - | - | - | - | 209 | - |
| Stage 2 | - | - | - | - | 659 | - |

| Approach | EB | WB | NB |
|---|---|---|---|
| HCM Control Delay, s | 0 | 0 | 18.9 |
| HCM LOS | | | C |

| Minor Lane/Major Mvmt | NBLn1 | EBT | EBR | WBL | WBT |
|---|---|---|---|---|---|
| Capacity (veh/h) | 262 | - | - | 350 | - |
| HCM Lane V/C Ratio | 0.008 | - | - | 0.006 | - |
| HCM Control Delay (s) | 18.9 | - | - | 15.3 | - |
| HCM Lane LOS | C | - | - | C | - |
| HCM 95th %tile Q(veh) | 0 | - | - | 0 | - |

| Intersection | |
|---|---|
| Int Delay, s/veh | 0.3 |

| Movement | EBL | EBT | WBT | WBR | SBL | SBR |
|---|---|---|---|---|---|---|
| Lane Configurations | | | | | | |
| Traffic Vol, veh/h | 11 | 1129 | 624 | 3 | 10 | 19 |
| Future Vol, veh/h | 11 | 1129 | 624 | 3 | 10 | 19 |
| Conflicting Peds, #/hr | 0 | 0 | 0 | 0 | 0 | 0 |
| Sign Control | Free | Free | Free | Free | Stop | Stop |
| RT Channelized | - | None | - | None | - | None |
| Storage Length | 90 | - | - | - | 0 | - |
| Veh in Median Storage, # | - | 0 | 0 | - | 0 | - |
| Grade, % | - | 0 | 0 | - | 0 | - |
| Peak Hour Factor | 92 | 92 | 92 | 92 | 92 | 92 |
| Heavy Vehicles, % | 2 | 2 | 2 | 2 | 2 | 2 |
| Mvmt Flow | 12 | 1227 | 678 | 3 | 11 | 21 |

| Major/Minor | Major1 | | Major2 | | Minor2 | |
|---|---|---|---|---|---|---|
| Conflicting Flow All | 681 | 0 | - | 0 | 1195 | 341 |
| Stage 1 | - | - | - | - | 680 | - |
| Stage 2 | - | - | - | - | 515 | - |
| Critical Hdwy | 5.34 | - | - | - | 5.74 | 7.14 |
| Critical Hdwy Stg 1 | - | - | - | - | 6.64 | - |
| Critical Hdwy Stg 2 | - | - | - | - | 6.04 | - |
| Follow-up Hdwy | 3.12 | - | - | - | 3.82 | 3.92 |
| Pot Cap-1 Maneuver | 556 | - | - | - | 247 | 559 |
| Stage 1 | - | - | - | - | 377 | - |
| Stage 2 | - | - | - | - | 516 | - |
| Platoon blocked, % | | - | - | - | | |
| Mov Cap-1 Maneuver | 556 | - | - | - | 242 | 559 |
| Mov Cap-2 Maneuver | - | - | - | - | 242 | - |
| Stage 1 | - | - | - | - | 369 | - |
| Stage 2 | - | - | - | - | 516 | - |

| Approach | EB | WB | SB |
|---|---|---|---|
| HCM Control Delay, s | 0.1 | 0 | 15.2 |
| HCM LOS | | | C |

| Minor Lane/Major Mvmt | EBL | EBT | WBT | WBR | SBLn1 |
|---|---|---|---|---|---|
| Capacity (veh/h) | 556 | - | - | - | 385 |
| HCM Lane V/C Ratio | 0.022 | - | - | - | 0.082 |
| HCM Control Delay (s) | 11.6 | - | - | - | 15.2 |
| HCM Lane LOS | B | - | - | - | C |
| HCM 95th %tile Q(veh) | 0.1 | - | - | - | 0.3 |

| Lane Group | EBT | WBL | WBT | SBL | SBT |
|---|---|---|---|---|---|
| Lane Group Flow (vph) | 367 | 237 | 245 | 376 | 359 |
| v/c Ratio | 0.55 | 0.75 | 0.16 | 0.57 | 0.54 |
| Control Delay | 24.1 | 39.7 | 9.2 | 19.5 | 16.3 |
| Queue Delay | 0.0 | 0.0 | 0.0 | 0.0 | 0.0 |
| Total Delay | 24.1 | 39.7 | 9.2 | 19.5 | 16.3 |
| Queue Length 50th (ft) | 62 | 81 | 25 | 107 | 85 |
| Queue Length 95th (ft) | 91 | #173 | 36 | #238 | 183 |
| Internal Link Dist (ft) | 117 | | 320 | | 250 |
| Turn Bay Length (ft) | | 115 | | | |
| Base Capacity (vph) | 893 | 335 | 1788 | 659 | 665 |
| Starvation Cap Reductn | 0 | 0 | 0 | 0 | 0 |
| Spillback Cap Reductn | 0 | 0 | 0 | 0 | 0 |
| Storage Cap Reductn | 0 | 0 | 0 | 0 | 0 |
| Reduced v/c Ratio | 0.41 | 0.71 | 0.14 | 0.57 | 0.54 |

Intersection Summary

# 95th percentile volume exceeds capacity, queue may be longer.
Queue shown is maximum after two cycles.

| Movement | EBL | EBT | EBR | WBL | WBT | WBR | NBL | NBT | NBR | SBL | SBT | SBR |
|---|---|---|---|---|---|---|---|---|---|---|---|---|
| Lane Configurations | | | | | | | | | | | | |
| Traffic Volume (veh/h) | 0 | 324 | 14 | 218 | 225 | 0 | 0 | 0 | 0 | 558 | 3 | 115 |
| Future Volume (veh/h) | 0 | 324 | 14 | 218 | 225 | 0 | 0 | 0 | 0 | 558 | 3 | 115 |
| Number | 7 | 4 | 14 | 3 | 8 | 18 | | | | 1 | 6 | 16 |
| Initial Q (Qb), veh | 0 | 0 | 0 | 0 | 0 | 0 | | | | 0 | 0 | 0 |
| Ped-Bike Adj(A_pbT) | 1.00 | | 1.00 | 1.00 | | 1.00 | | | | 1.00 | | 1.00 |
| Parking Bus, Adj | 1.00 | 1.00 | 1.00 | 1.00 | 1.00 | 1.00 | | | | 1.00 | 1.00 | 1.00 |
| Adj Sat Flow, veh/h/ln | 0 | 1765 | 1800 | 1765 | 1765 | 0 | | | | 1765 | 1765 | 1800 |
| Adj Flow Rate, veh/h | 0 | 352 | 15 | 237 | 245 | 0 | | | | 726 | 0 | 0 |
| Adj No. of Lanes | 0 | 2 | 0 | 1 | 2 | 0 | | | | 2 | 1 | 0 |
| Peak Hour Factor | 0.92 | 0.92 | 0.92 | 0.92 | 0.92 | 0.92 | | | | 0.92 | 0.92 | 0.92 |
| Percent Heavy Veh, % | 0 | 2 | 2 | 2 | 2 | 0 | | | | 2 | 2 | 2 |
| Cap, veh/h | 0 | 512 | 22 | 283 | 1313 | 0 | | | | 1597 | 838 | 0 |
| Arrive On Green | 0.00 | 0.16 | 0.16 | 0.17 | 0.39 | 0.00 | | | | 0.47 | 0.00 | 0.00 |
| Sat Flow, veh/h | 0 | 3366 | 139 | 1681 | 3441 | 0 | | | | 3361 | 1765 | 0 |
| Grp Volume(v), veh/h | 0 | 180 | 187 | 237 | 245 | 0 | | | | 726 | 0 | 0 |
| Grp Sat Flow(s),veh/h/ln | 0 | 1676 | 1740 | 1681 | 1676 | 0 | | | | 1681 | 1765 | 0 |
| Q Serve(g_s), s | 0.0 | 6.1 | 6.1 | 8.2 | 2.9 | 0.0 | | | | 8.7 | 0.0 | 0.0 |
| Cycle Q Clear(g_c), s | 0.0 | 6.1 | 6.1 | 8.2 | 2.9 | 0.0 | | | | 8.7 | 0.0 | 0.0 |
| Prop In Lane | 0.00 | | 0.08 | 1.00 | | 0.00 | | | | 1.00 | | 0.00 |
| Lane Grp Cap(c), veh/h | 0 | 262 | 272 | 283 | 1313 | 0 | | | | 1597 | 838 | 0 |
| V/C Ratio(X) | 0.00 | 0.69 | 0.69 | 0.84 | 0.19 | 0.00 | | | | 0.45 | 0.00 | 0.00 |
| Avail Cap(c_a), veh/h | 0 | 447 | 464 | 336 | 1788 | 0 | | | | 1597 | 838 | 0 |
| HCM Platoon Ratio | 1.00 | 1.00 | 1.00 | 1.00 | 1.00 | 1.00 | | | | 1.00 | 1.00 | 1.00 |
| Upstream Filter(I) | 0.00 | 1.00 | 1.00 | 0.88 | 0.88 | 0.00 | | | | 1.00 | 0.00 | 0.00 |
| Uniform Delay (d), s/veh | 0.0 | 23.9 | 23.9 | 24.1 | 12.0 | 0.0 | | | | 10.5 | 0.0 | 0.0 |
| Incr Delay (d2), s/veh | 0.0 | 3.2 | 3.1 | 13.1 | 0.1 | 0.0 | | | | 0.9 | 0.0 | 0.0 |
| Initial Q Delay(d3),s/veh | 0.0 | 0.0 | 0.0 | 0.0 | 0.0 | 0.0 | | | | 0.0 | 0.0 | 0.0 |
| %ile BackOfQ(50%),veh/ln | 0.0 | 3.0 | 3.1 | 4.8 | 1.3 | 0.0 | | | | 4.2 | 0.0 | 0.0 |
| LnGrp Delay(d),s/veh | 0.0 | 27.1 | 27.0 | 37.2 | 12.0 | 0.0 | | | | 11.5 | 0.0 | 0.0 |
| LnGrp LOS | | C | C | D | B | | | | | B | | |
| Approach Vol, veh/h | | 367 | | | 482 | | | | | | 726 | |
| Approach Delay, s/veh | | 27.0 | | | 24.4 | | | | | | 11.5 | |
| Approach LOS | | C | | | C | | | | | | B | |

| Timer | 1 | 2 | 3 | 4 | 5 | 6 | 7 | 8 |
|---|---|---|---|---|---|---|---|---|
| Assigned Phs | | | 3 | 4 | | 6 | | 8 |
| Phs Duration (G+Y+Rc), s | | | 14.1 | 13.4 | | 32.5 | | 27.5 |
| Change Period (Y+Rc), s | | | 4.0 | 4.0 | | 4.0 | | 4.0 |
| Max Green Setting (Gmax), s | | | 12.0 | 16.0 | | 20.0 | | 32.0 |
| Max Q Clear Time (g_c+I1), s | | | 10.2 | 8.1 | | 10.7 | | 4.9 |
| Green Ext Time (p_c), s | | | 0.1 | 1.3 | | 2.1 | | 1.6 |

| Intersection Summary | |
|---|---|
| HCM 2010 Ctrl Delay | 19.1 |
| HCM 2010 LOS | B |

Notes

User approved volume balancing among the lanes for turning movement.

| Lane Group | EBL | EBT | WBT | WBR | NBT | NBR |
|---|---|---|---|---|---|---|
| Lane Group Flow (vph) | 97 | 857 | 470 | 790 | 140 | 139 |
| v/c Ratio | 0.49 | 0.61 | 0.46 | 0.53 | 0.21 | 0.21 |
| Control Delay | 29.9 | 12.6 | 15.1 | 3.1 | 4.7 | 4.7 |
| Queue Delay | 0.0 | 0.0 | 0.0 | 0.0 | 0.0 | 0.0 |
| Total Delay | 29.9 | 12.6 | 15.1 | 3.1 | 4.7 | 4.7 |
| Queue Length 50th (ft) | 27 | 88 | 88 | 12 | 3 | 3 |
| Queue Length 95th (ft) | #67 | 113 | m104 | m154 | 34 | 34 |
| Internal Link Dist (ft) | | 320 | 600 | | 228 | |
| Turn Bay Length (ft) | 160 | | | | | |
| Base Capacity (vph) | 201 | 1743 | 1098 | 1500 | 674 | 667 |
| Starvation Cap Reductn | 0 | 0 | 0 | 0 | 0 | 0 |
| Spillback Cap Reductn | 0 | 0 | 0 | 0 | 0 | 0 |
| Storage Cap Reductn | 0 | 0 | 0 | 0 | 0 | 0 |
| Reduced v/c Ratio | 0.48 | 0.49 | 0.43 | 0.53 | 0.21 | 0.21 |

Intersection Summary

# 95th percentile volume exceeds capacity, queue may be longer.
Queue shown is maximum after two cycles.

m Volume for 95th percentile queue is metered by upstream signal.

| Movement | EBL | EBT | EBR | WBL | WBT | WBR | NBL | NBT | NBR | SBL | SBT | SBR |
|---|---|---|---|---|---|---|---|---|---|---|---|---|
| Lane Configurations | | | | | | | | | | | | |
| Traffic Volume (veh/h) | 89 | 788 | 0 | 0 | 432 | 727 | 11 | 0 | 246 | 0 | 0 | 0 |
| Future Volume (veh/h) | 89 | 788 | 0 | 0 | 432 | 727 | 11 | 0 | 246 | 0 | 0 | 0 |
| Number | 7 | 4 | 14 | 3 | 8 | 18 | 5 | 2 | 12 | | | |
| Initial Q (Qb), veh | 0 | 0 | 0 | 0 | 0 | 0 | 0 | 0 | 0 | | | |
| Ped-Bike Adj(A_pbT) | 1.00 | | 1.00 | 1.00 | | 1.00 | 1.00 | | 1.00 | | | |
| Parking Bus, Adj | 1.00 | 1.00 | 1.00 | 1.00 | 1.00 | 1.00 | 1.00 | 1.00 | 1.00 | | | |
| Adj Sat Flow, veh/h/ln | 1765 | 1765 | 0 | 0 | 1765 | 1765 | 1800 | 1765 | 1765 | | | |
| Adj Flow Rate, veh/h | 97 | 857 | 0 | 0 | 470 | 0 | 0 | 0 | 280 | | | |
| Adj No. of Lanes | 1 | 2 | 0 | 0 | 2 | 1 | 0 | 1 | 2 | | | |
| Peak Hour Factor | 0.92 | 0.92 | 0.92 | 0.92 | 0.92 | 0.92 | 0.92 | 0.92 | 0.92 | | | |
| Percent Heavy Veh, % | 2 | 2 | 0 | 0 | 2 | 2 | 2 | 2 | 2 | | | |
| Cap, veh/h | 121 | 1203 | 0 | 0 | 693 | 310 | 0 | 849 | 1444 | | | |
| Arrive On Green | 0.07 | 0.36 | 0.00 | 0.00 | 0.35 | 0.00 | 0.00 | 0.00 | 0.48 | | | |
| Sat Flow, veh/h | 1681 | 3441 | 0 | 0 | 3441 | 1500 | 0 | 1765 | 3000 | | | |
| Grp Volume(v), veh/h | 97 | 857 | 0 | 0 | 470 | 0 | 0 | 0 | 280 | | | |
| Grp Sat Flow(s),veh/h/ln | 1681 | 1676 | 0 | 0 | 1676 | 1500 | 0 | 1765 | 1500 | | | |
| Q Serve(g_s), s | 2.8 | 11.0 | 0.0 | 0.0 | 6.0 | 0.0 | 0.0 | 0.0 | 2.7 | | | |
| Cycle Q Clear(g_c), s | 2.8 | 11.0 | 0.0 | 0.0 | 6.0 | 0.0 | 0.0 | 0.0 | 2.7 | | | |
| Prop In Lane | 1.00 | | 0.00 | 0.00 | | 1.00 | 0.00 | | 1.00 | | | |
| Lane Grp Cap(c), veh/h | 121 | 1203 | 0 | 0 | 693 | 310 | 0 | 849 | 1444 | | | |
| V/C Ratio(X) | 0.80 | 0.71 | 0.00 | 0.00 | 0.68 | 0.00 | 0.00 | 0.00 | 0.19 | | | |
| Avail Cap(c_a), veh/h | 202 | 1744 | 0 | 0 | 1073 | 480 | 0 | 849 | 1444 | | | |
| HCM Platoon Ratio | 1.00 | 1.00 | 1.00 | 1.00 | 1.67 | 1.67 | 1.00 | 1.00 | 1.00 | | | |
| Upstream Filter(I) | 0.81 | 0.81 | 0.00 | 0.00 | 0.50 | 0.00 | 0.00 | 0.00 | 1.00 | | | |
| Uniform Delay (d), s/veh | 22.8 | 13.8 | 0.0 | 0.0 | 14.9 | 0.0 | 0.0 | 0.0 | 7.4 | | | |
| Incr Delay (d2), s/veh | 9.5 | 0.6 | 0.0 | 0.0 | 0.6 | 0.0 | 0.0 | 0.0 | 0.3 | | | |
| Initial Q Delay(d3),s/veh | 0.0 | 0.0 | 0.0 | 0.0 | 0.0 | 0.0 | 0.0 | 0.0 | 0.0 | | | |
| %ile BackOfQ(50%),veh/ln | 1.6 | 5.1 | 0.0 | 0.0 | 2.8 | 0.0 | 0.0 | 0.0 | 1.1 | | | |
| LnGrp Delay(d),s/veh | 32.3 | 14.5 | 0.0 | 0.0 | 15.5 | 0.0 | 0.0 | 0.0 | 7.7 | | | |
| LnGrp LOS | C | B | | | B | | | | A | | | |
| Approach Vol, veh/h | | 954 | | | 470 | | | 280 | | | | |
| Approach Delay, s/veh | | 16.3 | | | 15.5 | | | 7.7 | | | | |
| Approach LOS | | B | | | B | | | A | | | | |

| Timer | 1 | 2 | 3 | 4 | 5 | 6 | 7 | 8 |
|---|---|---|---|---|---|---|---|---|
| Assigned Phs | | 2 | | 4 | | | 7 | 8 |
| Phs Duration (G+Y+Rc), s | | 28.1 | | 21.9 | | | 7.6 | 14.3 |
| Change Period (Y+Rc), s | | 4.0 | | 4.0 | | | 4.0 | 4.0 |
| Max Green Setting (Gmax), s | | 16.0 | | 26.0 | | | 6.0 | 16.0 |
| Max Q Clear Time (g_c+I1), s | | 4.7 | | 13.0 | | | 4.8 | 8.0 |
| Green Ext Time (p_c), s | | 0.8 | | 4.9 | | | 0.0 | 1.9 |

| Intersection Summary | |
|---|---|
| HCM 2010 Ctrl Delay | 14.7 |
| HCM 2010 LOS | B |

Notes

User approved volume balancing among the lanes for turning movement.

| Lane Group | EBL | EBT | WBL | WBT | NBL | NBT | SBL | SBT |
|---|---|---|---|---|---|---|---|---|
| Lane Group Flow (vph) | 154 | 961 | 53 | 876 | 272 | 101 | 171 | 192 |
| v/c Ratio | 0.42 | 0.85 | 0.14 | 0.77 | 0.87 | 0.18 | 0.44 | 0.32 |
| Control Delay | 31.4 | 31.6 | 47.3 | 23.6 | 60.4 | 13.4 | 31.3 | 7.5 |
| Queue Delay | 0.0 | 0.0 | 0.0 | 0.0 | 0.0 | 0.0 | 0.0 | 0.0 |
| Total Delay | 31.4 | 31.6 | 47.3 | 23.6 | 60.4 | 13.4 | 31.3 | 7.5 |
| Queue Length 50th (ft) | 61 | 225 | 37 | 102 | 162 | 20 | 86 | 12 |
| Queue Length 95th (ft) | 129 | #310 | m53 | 146 | #314 | 58 | 149 | 62 |
| Internal Link Dist (ft) | | 600 | | 925 | | 1078 | | 400 |
| Turn Bay Length (ft) | 130 | | 60 | | 90 | | 90 | |
| Base Capacity (vph) | 368 | 1128 | 368 | 1131 | 313 | 555 | 390 | 604 |
| Starvation Cap Reductn | 0 | 0 | 0 | 0 | 0 | 0 | 0 | 0 |
| Spillback Cap Reductn | 0 | 0 | 0 | 0 | 0 | 0 | 0 | 0 |
| Storage Cap Reductn | 0 | 0 | 0 | 0 | 0 | 0 | 0 | 0 |
| Reduced v/c Ratio | 0.42 | 0.85 | 0.14 | 0.77 | 0.87 | 0.18 | 0.44 | 0.32 |

Intersection Summary

# 95th percentile volume exceeds capacity, queue may be longer.
Queue shown is maximum after two cycles.

m Volume for 95th percentile queue is metered by upstream signal.

| Movement | EBL | EBT | EBR | WBL | WBT | WBR | NBL | NBT | NBR | SBL | SBT | SBR |
|---|---|---|---|---|---|---|---|---|---|---|---|---|
| Lane Configurations | | | | | | | | | | | | |
| Traffic Volume (veh/h) | 142 | 688 | 196 | 49 | 730 | 76 | 250 | 42 | 51 | 157 | 26 | 151 |
| Future Volume (veh/h) | 142 | 688 | 196 | 49 | 730 | 76 | 250 | 42 | 51 | 157 | 26 | 151 |
| Number | 7 | 4 | 14 | 3 | 8 | 18 | 5 | 2 | 12 | 1 | 6 | 16 |
| Initial Q (Qb), veh | 0 | 0 | 0 | 0 | 0 | 0 | 0 | 0 | 0 | 0 | 0 | 0 |
| Ped-Bike Adj(A_pbT) | 1.00 | | 1.00 | 1.00 | | 1.00 | 1.00 | | 1.00 | 1.00 | | 1.00 |
| Parking Bus, Adj | 1.00 | 1.00 | 1.00 | 1.00 | 1.00 | 1.00 | 1.00 | 1.00 | 1.00 | 1.00 | 1.00 | 1.00 |
| Adj Sat Flow, veh/h/ln | 1765 | 1765 | 1800 | 1765 | 1765 | 1800 | 1765 | 1765 | 1800 | 1765 | 1765 | 1800 |
| Adj Flow Rate, veh/h | 154 | 748 | 213 | 53 | 793 | 83 | 272 | 46 | 55 | 171 | 28 | 164 |
| Adj No. of Lanes | 1 | 2 | 0 | 1 | 2 | 0 | 1 | 1 | 0 | 1 | 1 | 0 |
| Peak Hour Factor | 0.92 | 0.92 | 0.92 | 0.92 | 0.92 | 0.92 | 0.92 | 0.92 | 0.92 | 0.92 | 0.92 | 0.92 |
| Percent Heavy Veh, % | 2 | 2 | 2 | 2 | 2 | 2 | 2 | 2 | 2 | 2 | 2 | 2 |
| Cap, veh/h | 370 | 876 | 250 | 370 | 1042 | 109 | 336 | 235 | 281 | 426 | 72 | 419 |
| Arrive On Green | 0.22 | 0.34 | 0.34 | 0.22 | 0.34 | 0.34 | 0.32 | 0.32 | 0.32 | 0.32 | 0.32 | 0.32 |
| Sat Flow, veh/h | 1681 | 2578 | 734 | 1681 | 3064 | 321 | 1186 | 733 | 877 | 1288 | 224 | 1310 |
| Grp Volume(v), veh/h | 154 | 486 | 475 | 53 | 434 | 442 | 272 | 0 | 101 | 171 | 0 | 192 |
| Grp Sat Flow(s),veh/h/ln | 1681 | 1676 | 1635 | 1681 | 1676 | 1708 | 1186 | 0 | 1610 | 1288 | 0 | 1534 |
| Q Serve(g_s), s | 7.9 | 27.0 | 27.0 | 2.5 | 23.0 | 23.1 | 22.3 | 0.0 | 4.6 | 11.1 | 0.0 | 9.7 |
| Cycle Q Clear(g_c), s | 7.9 | 27.0 | 27.0 | 2.5 | 23.0 | 23.1 | 32.0 | 0.0 | 4.6 | 15.7 | 0.0 | 9.7 |
| Prop In Lane | 1.00 | | 0.45 | 1.00 | | 0.19 | 1.00 | | 0.54 | 1.00 | | 0.85 |
| Lane Grp Cap(c), veh/h | 370 | 570 | 556 | 370 | 570 | 581 | 336 | 0 | 515 | 426 | 0 | 491 |
| V/C Ratio(X) | 0.42 | 0.85 | 0.85 | 0.14 | 0.76 | 0.76 | 0.81 | 0.00 | 0.20 | 0.40 | 0.00 | 0.39 |
| Avail Cap(c_a), veh/h | 370 | 570 | 556 | 370 | 570 | 581 | 336 | 0 | 515 | 426 | 0 | 491 |
| HCM Platoon Ratio | 1.00 | 1.00 | 1.00 | 1.00 | 1.00 | 1.00 | 1.00 | 1.00 | 1.00 | 1.00 | 1.00 | 1.00 |
| Upstream Filter(I) | 1.00 | 1.00 | 1.00 | 1.00 | 1.00 | 1.00 | 1.00 | 0.00 | 1.00 | 1.00 | 0.00 | 1.00 |
| Uniform Delay (d), s/veh | 33.5 | 30.7 | 30.7 | 31.4 | 29.4 | 29.4 | 39.2 | 0.0 | 24.7 | 30.3 | 0.0 | 26.4 |
| Incr Delay (d2), s/veh | 3.4 | 15.0 | 15.3 | 0.8 | 9.3 | 9.1 | 18.7 | 0.0 | 0.8 | 2.8 | 0.0 | 2.3 |
| Initial Q Delay(d3),s/veh | 0.0 | 0.0 | 0.0 | 0.0 | 0.0 | 0.0 | 0.0 | 0.0 | 0.0 | 0.0 | 0.0 | 0.0 |
| %ile BackOfQ(50%),veh/ln | 4.0 | 14.8 | 14.5 | 1.3 | 12.1 | 12.3 | 9.2 | 0.0 | 2.1 | 4.3 | 0.0 | 4.4 |
| LnGrp Delay(d),s/veh | 36.9 | 45.7 | 46.0 | 32.2 | 38.6 | 38.5 | 57.8 | 0.0 | 25.5 | 33.2 | 0.0 | 28.8 |
| LnGrp LOS | D | D | D | C | D | D | E | | C | C | | C |
| Approach Vol, veh/h | | 1115 | | | 929 | | | 373 | | | 363 | |
| Approach Delay, s/veh | | 44.6 | | | 38.2 | | | 49.1 | | | 30.8 | |
| Approach LOS | | D | | | D | | | D | | | C | |

| Timer | 1 | 2 | 3 | 4 | 5 | 6 | 7 | 8 |
|---|---|---|---|---|---|---|---|---|
| Assigned Phs | | 2 | 3 | 4 | | 6 | 7 | 8 |
| Phs Duration (G+Y+Rc), s | | 36.0 | 26.0 | 38.0 | | 36.0 | 26.0 | 38.0 |
| Change Period (Y+Rc), s | | 4.0 | 4.0 | 4.0 | | 4.0 | 4.0 | 4.0 |
| Max Green Setting (Gmax), s | | 32.0 | 22.0 | 34.0 | | 32.0 | 22.0 | 34.0 |
| Max Q Clear Time (g_c+I1), s | | 34.0 | 4.5 | 29.0 | | 17.7 | 9.9 | 25.1 |
| Green Ext Time (p_c), s | | 0.0 | 0.1 | 2.7 | | 1.5 | 0.3 | 3.7 |

| Intersection Summary | |
|---|---|
| HCM 2010 Ctrl Delay | 41.3 |
| HCM 2010 LOS | D |

| Intersection | |
|---|---|
| Intersection Delay, s/veh | 4.6 |
| Intersection LOS | A |

| Approach | EB | WB | SB |
|---|---|---|---|
| Entry Lanes | 1 | 1 | 1 |
| Conflicting Circle Lanes | 1 | 1 | 1 |
| Adj Approach Flow, veh/h | 151 | 147 | 117 |
| Demand Flow Rate, veh/h | 154 | 150 | 119 |
| Vehicles Circulating, veh/h | 104 | 24 | 38 |
| Vehicles Exiting, veh/h | 53 | 234 | 136 |
| Follow-Up Headway, s | 3.186 | 3.186 | 3.186 |
| Ped Vol Crossing Leg, #/h | 0 | 0 | 0 |
| Ped Cap Adj | 1.000 | 1.000 | 1.000 |
| Approach Delay, s/veh | 5.0 | 4.5 | 4.3 |
| Approach LOS | A | A | A |

| Lane | Left | Left | Left |
|---|---|---|---|
| Designated Moves | LT | TR | LR |
| Assumed Moves | LT | TR | LR |
| RT Channelized | | | |
| Lane Util | 1.000 | 1.000 | 1.000 |
| Critical Headway, s | 5.193 | 5.193 | 5.193 |
| Entry Flow, veh/h | 154 | 150 | 119 |
| Cap Entry Lane, veh/h | 1018 | 1103 | 1088 |
| Entry HV Adj Factor | 0.983 | 0.982 | 0.983 |
| Flow Entry, veh/h | 151 | 147 | 117 |
| Cap Entry, veh/h | 1001 | 1083 | 1070 |
| V/C Ratio | 0.151 | 0.136 | 0.109 |
| Control Delay, s/veh | 5.0 | 4.5 | 4.3 |
| LOS | A | A | A |
| 95th %tile Queue, veh | 1 | 0 | 0 |

| Intersection | |
|---|---|
| Intersection Delay, s/veh | 8.2 |
| Intersection LOS | A |

| Movement | EBL | EBT | WBT | WBR | SBL | SBR |
|---|---|---|---|---|---|---|
| Lane Configurations | | | | | | |
| Traffic Vol, veh/h | 22 | 117 | 34 | 101 | 94 | 14 |
| Future Vol, veh/h | 22 | 117 | 34 | 101 | 94 | 14 |
| Peak Hour Factor | 0.92 | 0.92 | 0.92 | 0.92 | 0.92 | 0.92 |
| Heavy Vehicles, % | 2 | 2 | 2 | 2 | 2 | 2 |
| Mvmt Flow | 24 | 127 | 37 | 110 | 102 | 15 |
| Number of Lanes | 0 | 1 | 1 | 0 | 1 | 0 |

| Approach | EB | WB | SB |
|---|---|---|---|
| Opposing Approach | WB | EB | |
| Opposing Lanes | 1 | 1 | 0 |
| Conflicting Approach Left | SB | | WB |
| Conflicting Lanes Left | 1 | 0 | 1 |
| Conflicting Approach Right | | SB | EB |
| Conflicting Lanes Right | 0 | 1 | 1 |
| HCM Control Delay | 8.4 | 7.7 | 8.5 |
| HCM LOS | A | A | A |

| Lane | EBLn1 | WBLn1 | SBLn1 |
|---|---|---|---|
| Vol Left, % | 16% | 0% | 87% |
| Vol Thru, % | 84% | 25% | 0% |
| Vol Right, % | 0% | 75% | 13% |
| Sign Control | Stop | Stop | Stop |
| Traffic Vol by Lane | 139 | 135 | 108 |
| LT Vol | 22 | 0 | 94 |
| Through Vol | 117 | 34 | 0 |
| RT Vol | 0 | 101 | 14 |
| Lane Flow Rate | 151 | 147 | 117 |
| Geometry Grp | 1 | 1 | 1 |
| Degree of Util (X) | 0.185 | 0.16 | 0.152 |
| Departure Headway (Hd) | 4.397 | 3.936 | 4.666 |
| Convergence, Y/N | Yes | Yes | Yes |
| Cap | 819 | 914 | 770 |
| Service Time | 2.409 | 1.949 | 2.685 |
| HCM Lane V/C Ratio | 0.184 | 0.161 | 0.152 |
| HCM Control Delay | 8.4 | 7.7 | 8.5 |
| HCM Lane LOS | A | A | A |
| HCM 95th-tile Q | 0.7 | 0.6 | 0.5 |

| Intersection | |
|---|---|
| Int Delay, s/veh | 3.5 |

| Movement | EBL | EBT | WBT | WBR | SBL | SBR |
|---|---|---|---|---|---|---|
| Lane Configurations | | | | | | |
| Traffic Vol, veh/h | 22 | 117 | 34 | 101 | 94 | 14 |
| Future Vol, veh/h | 22 | 117 | 34 | 101 | 94 | 14 |
| Conflicting Peds, #/hr | 0 | 0 | 0 | 0 | 0 | 0 |
| Sign Control | Free | Free | Free | Free | Stop | Stop |
| RT Channelized | - | None | - | None | - | None |
| Storage Length | - | - | - | - | 0 | - |
| Veh in Median Storage, # | - | 0 | 0 | - | 0 | - |
| Grade, % | - | 0 | 0 | - | 0 | - |
| Peak Hour Factor | 92 | 92 | 92 | 92 | 92 | 92 |
| Heavy Vehicles, % | 2 | 2 | 2 | 2 | 2 | 2 |
| Mvmt Flow | 24 | 127 | 37 | 110 | 102 | 15 |

| Major/Minor | Major1 | | Major2 | | Minor2 | |
|---|---|---|---|---|---|---|
| Conflicting Flow All | 147 | 0 | - | 0 | 267 | 92 |
| Stage 1 | - | - | - | - | 92 | - |
| Stage 2 | - | - | - | - | 175 | - |
| Critical Hdwy | 4.12 | - | - | - | 6.42 | 6.22 |
| Critical Hdwy Stg 1 | - | - | - | - | 5.42 | - |
| Critical Hdwy Stg 2 | - | - | - | - | 5.42 | - |
| Follow-up Hdwy | 2.218 | - | - | - | 3.518 | 3.318 |
| Pot Cap-1 Maneuver | 1435 | - | - | - | 722 | 965 |
| Stage 1 | - | - | - | - | 932 | - |
| Stage 2 | - | - | - | - | 855 | - |
| Platoon blocked, % | | - | - | - | | |
| Mov Cap-1 Maneuver | 1435 | - | - | - | 709 | 965 |
| Mov Cap-2 Maneuver | - | - | - | - | 709 | - |
| Stage 1 | - | - | - | - | 915 | - |
| Stage 2 | - | - | - | - | 855 | - |

| Approach | EB | WB | SB |
|---|---|---|---|
| HCM Control Delay, s | 1.2 | 0 | 10.8 |
| HCM LOS | | | B |

| Minor Lane/Major Mvmt | EBL | EBT | WBT | WBR | SBLn1 |
|---|---|---|---|---|---|
| Capacity (veh/h) | 1435 | - | - | - | 734 |
| HCM Lane V/C Ratio | 0.017 | - | - | - | 0.16 |
| HCM Control Delay (s) | 7.6 | 0 | - | - | 10.8 |
| HCM Lane LOS | A | A | - | - | B |
| HCM 95th %tile Q(veh) | 0.1 | - | - | - | 0.6 |

| Intersection | |
|---|---|
| Int Delay, s/veh | 0.4 |

| Movement | EBT | EBR | WBL | WBT | NBL | NBR |
|---|---|---|---|---|---|---|
| Lane Configurations | | | | | | |
| Traffic Vol, veh/h | 675 | 2 | 30 | 800 | 2 | 29 |
| Future Vol, veh/h | 675 | 2 | 30 | 800 | 2 | 29 |
| Conflicting Peds, #/hr | 0 | 0 | 0 | 0 | 0 | 0 |
| Sign Control | Free | Free | Free | Free | Stop | Stop |
| RT Channelized | - | None | - | None | - | None |
| Storage Length | - | - | 90 | - | 0 | - |
| Veh in Median Storage, # | 0 | - | - | 0 | 0 | - |
| Grade, % | 0 | - | - | 0 | 0 | - |
| Peak Hour Factor | 92 | 92 | 92 | 92 | 92 | 92 |
| Heavy Vehicles, % | 2 | 2 | 2 | 2 | 2 | 2 |
| Mvmt Flow | 734 | 2 | 33 | 870 | 2 | 32 |

| Major/Minor | Major1 | | Major2 | | Minor1 | |
|---|---|---|---|---|---|---|
| Conflicting Flow All | 0 | 0 | 736 | 0 | 1236 | 368 |
| Stage 1 | - | - | - | - | 735 | - |
| Stage 2 | - | - | - | - | 501 | - |
| Critical Hdwy | - | - | 4.14 | - | 6.84 | 6.94 |
| Critical Hdwy Stg 1 | - | - | - | - | 5.84 | - |
| Critical Hdwy Stg 2 | - | - | - | - | 5.84 | - |
| Follow-up Hdwy | - | - | 2.22 | - | 3.52 | 3.32 |
| Pot Cap-1 Maneuver | - | - | 865 | - | 168 | 629 |
| Stage 1 | - | - | - | - | 435 | - |
| Stage 2 | - | - | - | - | 574 | - |
| Platoon blocked, % | - | - | | - | | |
| Mov Cap-1 Maneuver | - | - | 865 | - | 162 | 629 |
| Mov Cap-2 Maneuver | - | - | - | - | 287 | - |
| Stage 1 | - | - | - | - | 418 | - |
| Stage 2 | - | - | - | - | 574 | - |

| Approach | EB | WB | NB |
|---|---|---|---|
| HCM Control Delay, s | 0 | 0.3 | 11.5 |
| HCM LOS | | | B |

| Minor Lane/Major Mvmt | NBLn1 | EBT | EBR | WBL | WBT |
|---|---|---|---|---|---|
| Capacity (veh/h) | 584 | - | - | 865 | - |
| HCM Lane V/C Ratio | 0.058 | - | - | 0.038 | - |
| HCM Control Delay (s) | 11.5 | - | - | 9.3 | - |
| HCM Lane LOS | B | - | - | A | - |
| HCM 95th %tile Q(veh) | 0.2 | - | - | 0.1 | - |

| Lane Group | EBL | EBT | WBL | WBT | NBL | NBT | SBL | SBT |
|---|---|---|---|---|---|---|---|---|
| Lane Group Flow (vph) | 11 | 779 | 197 | 687 | 288 | 195 | 1 | 26 |
| v/c Ratio | 0.04 | 0.85 | 0.78 | 0.76 | 0.59 | 0.24 | 0.00 | 0.06 |
| Control Delay | 27.6 | 56.9 | 63.7 | 39.9 | 45.2 | 4.0 | 27.0 | 21.5 |
| Queue Delay | 0.0 | 0.0 | 0.0 | 0.0 | 0.0 | 0.0 | 0.0 | 0.0 |
| Total Delay | 27.6 | 56.9 | 63.7 | 39.9 | 45.2 | 4.0 | 27.0 | 21.5 |
| Queue Length 50th (ft) | 6 | 265 | 123 | 211 | 89 | 6 | 1 | 8 |
| Queue Length 95th (ft) | m9 | m#324 | #235 | 279 | 132 | 44 | 5 | 29 |
| Internal Link Dist (ft) | | 925 | | 1050 | | 192 | | 222 |
| Turn Bay Length (ft) | 90 | | 100 | | | | | |
| Base Capacity (vph) | 251 | 913 | 251 | 904 | 487 | 796 | 302 | 460 |
| Starvation Cap Reductn | 0 | 0 | 0 | 0 | 0 | 0 | 0 | 0 |
| Spillback Cap Reductn | 0 | 0 | 0 | 0 | 0 | 0 | 0 | 0 |
| Storage Cap Reductn | 0 | 0 | 0 | 0 | 0 | 0 | 0 | 0 |
| Reduced v/c Ratio | 0.04 | 0.85 | 0.78 | 0.76 | 0.59 | 0.24 | 0.00 | 0.06 |

Intersection Summary

# 95th percentile volume exceeds capacity, queue may be longer.
Queue shown is maximum after two cycles.

m Volume for 95th percentile queue is metered by upstream signal.

# HCM 2010 Signalized Intersection Summary
## 150: Yucaipa Blvd & Knollhaven Lane

01/09/2019

| Movement | EBL | EBT | EBR | WBL | WBT | WBR | NBL | NBT | NBR | SBL | SBT | SBR |
|---|---|---|---|---|---|---|---|---|---|---|---|---|
| Lane Configurations | | | | | | | | | | | | |
| Traffic Volume (veh/h) | 10 | 500 | 217 | 181 | 629 | 3 | 265 | 16 | 164 | 1 | 17 | 7 |
| Future Volume (veh/h) | 10 | 500 | 217 | 181 | 629 | 3 | 265 | 16 | 164 | 1 | 17 | 7 |
| Number | 7 | 4 | 14 | 3 | 8 | 18 | 5 | 2 | 12 | 1 | 6 | 16 |
| Initial Q (Qb), veh | 0 | 0 | 0 | 0 | 0 | 0 | 0 | 0 | 0 | 0 | 0 | 0 |
| Ped-Bike Adj(A_pbT) | 1.00 | | 1.00 | 1.00 | | 1.00 | 1.00 | | 1.00 | 1.00 | | 1.00 |
| Parking Bus, Adj | 1.00 | 1.00 | 1.00 | 1.00 | 1.00 | 1.00 | 1.00 | 1.00 | 1.00 | 1.00 | 1.00 | 1.00 |
| Adj Sat Flow, veh/h/ln | 1765 | 1765 | 1800 | 1765 | 1765 | 1800 | 1765 | 1765 | 1800 | 1765 | 1765 | 1800 |
| Adj Flow Rate, veh/h | 11 | 543 | 236 | 197 | 684 | 3 | 288 | 17 | 178 | 1 | 18 | 8 |
| Adj No. of Lanes | 1 | 2 | 0 | 1 | 2 | 0 | 2 | 1 | 0 | 1 | 1 | 0 |
| Peak Hour Factor | 0.92 | 0.92 | 0.92 | 0.92 | 0.92 | 0.92 | 0.92 | 0.92 | 0.92 | 0.92 | 0.92 | 0.92 |
| Percent Heavy Veh, % | 2 | 2 | 2 | 2 | 2 | 2 | 2 | 2 | 2 | 2 | 2 | 2 |
| Cap, veh/h | 19 | 605 | 262 | 243 | 1366 | 6 | 326 | 52 | 541 | 384 | 259 | 115 |
| Arrive On Green | 0.01 | 0.27 | 0.27 | 0.14 | 0.40 | 0.40 | 0.10 | 0.39 | 0.39 | 0.22 | 0.22 | 0.22 |
| Sat Flow, veh/h | 1681 | 2279 | 988 | 1681 | 3424 | 15 | 3261 | 133 | 1387 | 1183 | 1159 | 515 |
| Grp Volume(v), veh/h | 11 | 399 | 380 | 197 | 335 | 352 | 288 | 0 | 195 | 1 | 0 | 26 |
| Grp Sat Flow(s),veh/h/ln | 1681 | 1676 | 1590 | 1681 | 1676 | 1762 | 1630 | 0 | 1520 | 1183 | 0 | 1674 |
| Q Serve(g_s), s | 0.4 | 13.8 | 13.8 | 6.8 | 9.0 | 9.0 | 5.2 | 0.0 | 5.4 | 0.0 | 0.0 | 0.7 |
| Cycle Q Clear(g_c), s | 0.4 | 13.8 | 13.8 | 6.8 | 9.0 | 9.0 | 5.2 | 0.0 | 5.4 | 0.0 | 0.0 | 0.7 |
| Prop In Lane | 1.00 | | 0.62 | 1.00 | | 0.01 | 1.00 | | 0.91 | 1.00 | | 0.31 |
| Lane Grp Cap(c), veh/h | 19 | 445 | 422 | 243 | 669 | 703 | 326 | 0 | 593 | 384 | 0 | 374 |
| V/C Ratio(X) | 0.59 | 0.90 | 0.90 | 0.81 | 0.50 | 0.50 | 0.88 | 0.00 | 0.33 | 0.00 | 0.00 | 0.07 |
| Avail Cap(c_a), veh/h | 224 | 447 | 424 | 364 | 669 | 703 | 326 | 0 | 593 | 384 | 0 | 374 |
| HCM Platoon Ratio | 1.00 | 1.00 | 1.00 | 1.00 | 1.00 | 1.00 | 1.00 | 1.00 | 1.00 | 1.00 | 1.00 | 1.00 |
| Upstream Filter(I) | 0.71 | 0.71 | 0.71 | 1.00 | 1.00 | 1.00 | 1.00 | 0.00 | 1.00 | 1.00 | 0.00 | 1.00 |
| Uniform Delay (d), s/veh | 29.5 | 21.2 | 21.3 | 24.9 | 13.5 | 13.5 | 26.7 | 0.0 | 12.8 | 18.1 | 0.0 | 18.4 |
| Incr Delay (d2), s/veh | 19.0 | 15.6 | 16.8 | 8.1 | 0.6 | 0.6 | 23.6 | 0.0 | 1.5 | 0.0 | 0.0 | 0.4 |
| Initial Q Delay(d3),s/veh | 0.0 | 0.0 | 0.0 | 0.0 | 0.0 | 0.0 | 0.0 | 0.0 | 0.0 | 0.0 | 0.0 | 0.0 |
| %ile BackOfQ(50%),veh/ln | 0.3 | 8.2 | 8.0 | 3.7 | 4.2 | 4.4 | 3.4 | 0.0 | 2.5 | 0.0 | 0.0 | 0.4 |
| LnGrp Delay(d),s/veh | 48.5 | 36.9 | 38.0 | 33.0 | 14.1 | 14.1 | 50.2 | 0.0 | 14.3 | 18.1 | 0.0 | 18.7 |
| LnGrp LOS | D | D | D | C | B | B | D | | B | B | | B |
| Approach Vol, veh/h | | 790 | | | 884 | | | 483 | | | 27 | |
| Approach Delay, s/veh | | 37.6 | | | 18.3 | | | 35.7 | | | 18.7 | |
| Approach LOS | | D | | | B | | | D | | | B | |

| Timer | 1 | 2 | 3 | 4 | 5 | 6 | 7 | 8 |
|---|---|---|---|---|---|---|---|---|
| Assigned Phs | | 2 | 3 | 4 | 5 | 6 | 7 | 8 |
| Phs Duration (G+Y+Rc), s | | 27.4 | 12.7 | 19.9 | 10.0 | 17.4 | 4.7 | 27.9 |
| Change Period (Y+Rc), s | | 4.0 | 4.0 | 4.0 | 4.0 | 4.0 | 4.0 | 4.0 |
| Max Green Setting (Gmax), s | | 19.0 | 13.0 | 16.0 | 6.0 | 9.0 | 8.0 | 21.0 |
| Max Q Clear Time (g_c+I1), s | | 7.4 | 8.8 | 15.8 | 7.2 | 2.7 | 2.4 | 11.0 |
| Green Ext Time (p_c), s | | 0.8 | 0.2 | 0.1 | 0.0 | 0.0 | 0.0 | 3.0 |

| Intersection Summary | |
|---|---|
| HCM 2010 Ctrl Delay | 29.1 |
| HCM 2010 LOS | C |

Notes

User approved pedestrian interval to be less than phase max green.

# Queues
## 3: I-10 EB & Yucaipa Blvd

12/19/2018

| Lane Group | EBT | WBL | WBT | SBL | SBT |
|---|---|---|---|---|---|
| Lane Group Flow (vph) | 377 | 249 | 209 | 842 | 797 |
| v/c Ratio | 0.70 | 0.96 | 0.17 | 0.96 | 0.92 |
| Control Delay | 43.1 | 86.0 | 19.7 | 43.8 | 35.3 |
| Queue Delay | 0.0 | 0.0 | 0.0 | 0.0 | 0.0 |
| Total Delay | 43.1 | 86.0 | 19.7 | 43.8 | 35.3 |
| Queue Length 50th (ft) | 106 | 142 | 41 | 461 | 391 |
| Queue Length 95th (ft) | 153 | #289 | 65 | #761 | #689 |
| Internal Link Dist (ft) | 117 | | 320 | | 250 |
| Turn Bay Length (ft) | | 115 | | | |
| Base Capacity (vph) | 595 | 260 | 1266 | 877 | 869 |
| Starvation Cap Reductn | 0 | 0 | 0 | 0 | 0 |
| Spillback Cap Reductn | 0 | 0 | 0 | 0 | 0 |
| Storage Cap Reductn | 0 | 0 | 0 | 0 | 0 |
| Reduced v/c Ratio | 0.63 | 0.96 | 0.17 | 0.96 | 0.92 |

### Intersection Summary

# 95th percentile volume exceeds capacity, queue may be longer.
Queue shown is maximum after two cycles.

| Movement | EBL | EBT | EBR | WBL | WBT | WBR | NBL | NBT | NBR | SBL | SBT | SBR |
|---|---|---|---|---|---|---|---|---|---|---|---|---|
| Lane Configurations | | | | | | | | | | | | |
| Traffic Volume (veh/h) | 0 | 342 | 5 | 229 | 192 | 0 | 0 | 0 | 0 | 1191 | 10 | 306 |
| Future Volume (veh/h) | 0 | 342 | 5 | 229 | 192 | 0 | 0 | 0 | 0 | 1191 | 10 | 306 |
| Number | 7 | 4 | 14 | 3 | 8 | 18 | | | | 1 | 6 | 16 |
| Initial Q (Qb), veh | 0 | 0 | 0 | 0 | 0 | 0 | | | | 0 | 0 | 0 |
| Ped-Bike Adj(A_pbT) | 1.00 | | 1.00 | 1.00 | | 1.00 | | | | 1.00 | | 1.00 |
| Parking Bus, Adj | 1.00 | 1.00 | 1.00 | 1.00 | 1.00 | 1.00 | | | | 1.00 | 1.00 | 1.00 |
| Adj Sat Flow, veh/h/ln | 0 | 1765 | 1800 | 1765 | 1765 | 0 | | | | 1765 | 1765 | 1800 |
| Adj Flow Rate, veh/h | 0 | 372 | 5 | 249 | 209 | 0 | | | | 820 | 677 | 333 |
| Adj No. of Lanes | 0 | 2 | 0 | 1 | 2 | 0 | | | | 1 | 1 | 0 |
| Peak Hour Factor | 0.92 | 0.92 | 0.92 | 0.92 | 0.92 | 0.92 | | | | 0.92 | 0.92 | 0.92 |
| Percent Heavy Veh, % | 0 | 2 | 2 | 2 | 2 | 0 | | | | 2 | 2 | 2 |
| Cap, veh/h | 0 | 468 | 6 | 261 | 1134 | 0 | | | | 963 | 640 | 315 |
| Arrive On Green | 0.00 | 0.14 | 0.14 | 0.16 | 0.34 | 0.00 | | | | 0.57 | 0.57 | 0.57 |
| Sat Flow, veh/h | 0 | 3476 | 45 | 1681 | 3441 | 0 | | | | 1681 | 1118 | 550 |
| Grp Volume(v), veh/h | 0 | 184 | 193 | 249 | 209 | 0 | | | | 820 | 0 | 1010 |
| Grp Sat Flow(s),veh/h/ln | 0 | 1676 | 1757 | 1681 | 1676 | 0 | | | | 1681 | 0 | 1668 |
| Q Serve(g_s), s | 0.0 | 9.6 | 9.6 | 13.2 | 4.0 | 0.0 | | | | 36.6 | 0.0 | 51.6 |
| Cycle Q Clear(g_c), s | 0.0 | 9.6 | 9.6 | 13.2 | 4.0 | 0.0 | | | | 36.6 | 0.0 | 51.6 |
| Prop In Lane | 0.00 | | 0.03 | 1.00 | | 0.00 | | | | 1.00 | | 0.33 |
| Lane Grp Cap(c), veh/h | 0 | 232 | 243 | 261 | 1134 | 0 | | | | 963 | 0 | 956 |
| V/C Ratio(X) | 0.00 | 0.79 | 0.80 | 0.95 | 0.18 | 0.00 | | | | 0.85 | 0.00 | 1.06 |
| Avail Cap(c_a), veh/h | 0 | 298 | 312 | 261 | 1267 | 0 | | | | 963 | 0 | 956 |
| HCM Platoon Ratio | 1.00 | 1.00 | 1.00 | 1.00 | 1.00 | 1.00 | | | | 1.00 | 1.00 | 1.00 |
| Upstream Filter(I) | 0.00 | 1.00 | 1.00 | 0.94 | 0.94 | 0.00 | | | | 1.00 | 0.00 | 1.00 |
| Uniform Delay (d), s/veh | 0.0 | 37.5 | 37.6 | 37.7 | 21.0 | 0.0 | | | | 16.0 | 0.0 | 19.2 |
| Incr Delay (d2), s/veh | 0.0 | 10.7 | 10.4 | 41.1 | 0.1 | 0.0 | | | | 9.4 | 0.0 | 45.4 |
| Initial Q Delay(d3),s/veh | 0.0 | 0.0 | 0.0 | 0.0 | 0.0 | 0.0 | | | | 0.0 | 0.0 | 0.0 |
| %ile BackOfQ(50%),veh/ln | 0.0 | 5.1 | 5.4 | 9.1 | 1.8 | 0.0 | | | | 19.4 | 0.0 | 35.4 |
| LnGrp Delay(d),s/veh | 0.0 | 48.3 | 48.0 | 78.8 | 21.1 | 0.0 | | | | 25.4 | 0.0 | 64.6 |
| LnGrp LOS | | D | D | E | C | | | | | C | | F |
| Approach Vol, veh/h | | 377 | | | 458 | | | | | | 1830 | |
| Approach Delay, s/veh | | 48.1 | | | 52.5 | | | | | | 47.1 | |
| Approach LOS | | D | | | D | | | | | | D | |

| Timer | 1 | 2 | 3 | 4 | 5 | 6 | 7 | 8 |
|---|---|---|---|---|---|---|---|---|
| Assigned Phs | | | 3 | 4 | | 6 | | 8 |
| Phs Duration (G+Y+Rc), s | | | 18.0 | 16.4 | | 55.6 | | 34.4 |
| Change Period (Y+Rc), s | | | 4.0 | 4.0 | | 4.0 | | 4.0 |
| Max Green Setting (Gmax), s | | | 14.0 | 16.0 | | 48.0 | | 34.0 |
| Max Q Clear Time (g_c+I1), s | | | 15.2 | 11.6 | | 53.6 | | 6.0 |
| Green Ext Time (p_c), s | | | 0.0 | 0.9 | | 0.0 | | 1.3 |

| Intersection Summary | |
|---|---|
| HCM 2010 Ctrl Delay | 48.1 |
| HCM 2010 LOS | D |

Notes

User approved volume balancing among the lanes for turning movement.

| Lane Group | EBL | EBT | WBT | WBR | NBT | NBR |
|---|---|---|---|---|---|---|
| Lane Group Flow (vph) | 108 | 1549 | 449 | 853 | 189 | 191 |
| v/c Ratio | 0.45 | 0.83 | 0.36 | 0.57 | 0.38 | 0.38 |
| Control Delay | 27.3 | 15.4 | 14.6 | 1.6 | 10.6 | 10.8 |
| Queue Delay | 0.0 | 1.2 | 0.0 | 0.0 | 0.0 | 0.0 |
| Total Delay | 27.3 | 16.6 | 14.6 | 1.6 | 10.6 | 10.8 |
| Queue Length 50th (ft) | 32 | 190 | 58 | 0 | 23 | 24 |
| Queue Length 95th (ft) | 71 | 277 | 93 | 0 | 68 | 70 |
| Internal Link Dist (ft) | | 320 | 600 | | 228 | |
| Turn Bay Length (ft) | 160 | | | | | |
| Base Capacity (vph) | 274 | 1889 | 1246 | 1500 | 501 | 497 |
| Starvation Cap Reductn | 0 | 158 | 0 | 0 | 0 | 0 |
| Spillback Cap Reductn | 0 | 0 | 0 | 0 | 0 | 0 |
| Storage Cap Reductn | 0 | 0 | 0 | 0 | 0 | 0 |
| Reduced v/c Ratio | 0.39 | 0.89 | 0.36 | 0.57 | 0.38 | 0.38 |

Intersection Summary

| Movement | EBL | EBT | EBR | WBL | WBT | WBR | NBL | NBT | NBR | SBL | SBT | SBR |
|---|---|---|---|---|---|---|---|---|---|---|---|---|
| Lane Configurations | | | | | | | | | | | | |
| Traffic Volume (veh/h) | 99 | 1425 | 0 | 0 | 413 | 785 | 12 | 0 | 338 | 0 | 0 | 0 |
| Future Volume (veh/h) | 99 | 1425 | 0 | 0 | 413 | 785 | 12 | 0 | 338 | 0 | 0 | 0 |
| Number | 7 | 4 | 14 | 3 | 8 | 18 | 5 | 2 | 12 | | | |
| Initial Q (Qb), veh | 0 | 0 | 0 | 0 | 0 | 0 | 0 | 0 | 0 | | | |
| Ped-Bike Adj(A_pbT) | 1.00 | | 1.00 | 1.00 | | 1.00 | 1.00 | | 1.00 | | | |
| Parking Bus, Adj | 1.00 | 1.00 | 1.00 | 1.00 | 1.00 | 1.00 | 1.00 | 1.00 | 1.00 | | | |
| Adj Sat Flow, veh/h/ln | 1765 | 1765 | 0 | 0 | 1765 | 1765 | 1800 | 1765 | 1765 | | | |
| Adj Flow Rate, veh/h | 108 | 1549 | 0 | 0 | 449 | 0 | 0 | 0 | 381 | | | |
| Adj No. of Lanes | 1 | 2 | 0 | 0 | 2 | 1 | 0 | 1 | 2 | | | |
| Peak Hour Factor | 0.92 | 0.92 | 0.92 | 0.92 | 0.92 | 0.92 | 0.92 | 0.92 | 0.92 | | | |
| Percent Heavy Veh, % | 2 | 2 | 0 | 0 | 2 | 2 | 2 | 2 | 2 | | | |
| Cap, veh/h | 137 | 1789 | 0 | 0 | 1272 | 569 | 0 | 566 | 963 | | | |
| Arrive On Green | 0.08 | 0.53 | 0.00 | 0.00 | 0.38 | 0.00 | 0.00 | 0.00 | 0.32 | | | |
| Sat Flow, veh/h | 1681 | 3441 | 0 | 0 | 3441 | 1500 | 0 | 1765 | 3000 | | | |
| Grp Volume(v), veh/h | 108 | 1549 | 0 | 0 | 449 | 0 | 0 | 0 | 381 | | | |
| Grp Sat Flow(s),veh/h/ln | 1681 | 1676 | 0 | 0 | 1676 | 1500 | 0 | 1765 | 1500 | | | |
| Q Serve(g_s), s | 3.5 | 22.0 | 0.0 | 0.0 | 5.3 | 0.0 | 0.0 | 0.0 | 5.4 | | | |
| Cycle Q Clear(g_c), s | 3.5 | 22.0 | 0.0 | 0.0 | 5.3 | 0.0 | 0.0 | 0.0 | 5.4 | | | |
| Prop In Lane | 1.00 | | 0.00 | 0.00 | | 1.00 | 0.00 | | 1.00 | | | |
| Lane Grp Cap(c), veh/h | 137 | 1789 | 0 | 0 | 1272 | 569 | 0 | 566 | 963 | | | |
| V/C Ratio(X) | 0.79 | 0.87 | 0.00 | 0.00 | 0.35 | 0.00 | 0.00 | 0.00 | 0.40 | | | |
| Avail Cap(c_a), veh/h | 275 | 1890 | 0 | 0 | 1272 | 569 | 0 | 566 | 963 | | | |
| HCM Platoon Ratio | 1.00 | 1.00 | 1.00 | 1.00 | 1.00 | 1.00 | 1.00 | 1.00 | 1.00 | | | |
| Upstream Filter(I) | 0.35 | 0.35 | 0.00 | 0.00 | 0.47 | 0.00 | 0.00 | 0.00 | 1.00 | | | |
| Uniform Delay (d), s/veh | 24.8 | 11.1 | 0.0 | 0.0 | 12.2 | 0.0 | 0.0 | 0.0 | 14.5 | | | |
| Incr Delay (d2), s/veh | 3.6 | 1.6 | 0.0 | 0.0 | 0.1 | 0.0 | 0.0 | 0.0 | 1.2 | | | |
| Initial Q Delay(d3),s/veh | 0.0 | 0.0 | 0.0 | 0.0 | 0.0 | 0.0 | 0.0 | 0.0 | 0.0 | | | |
| %ile BackOfQ(50%),veh/ln | 1.8 | 10.3 | 0.0 | 0.0 | 2.4 | 0.0 | 0.0 | 0.0 | 2.4 | | | |
| LnGrp Delay(d),s/veh | 28.4 | 12.7 | 0.0 | 0.0 | 12.3 | 0.0 | 0.0 | 0.0 | 15.7 | | | |
| LnGrp LOS | C | B | | | B | | | | B | | | |
| Approach Vol, veh/h | | 1657 | | | 449 | | | 381 | | | | |
| Approach Delay, s/veh | | 13.7 | | | 12.3 | | | 15.7 | | | | |
| Approach LOS | | B | | | B | | | B | | | | |

| Timer | 1 | 2 | 3 | 4 | 5 | 6 | 7 | 8 |
|---|---|---|---|---|---|---|---|---|
| Assigned Phs | | 2 | | 4 | | | 7 | 8 |
| Phs Duration (G+Y+Rc), s | | 21.7 | | 33.3 | | | 8.5 | 24.9 |
| Change Period (Y+Rc), s | | 4.0 | | 4.0 | | | 4.0 | 4.0 |
| Max Green Setting (Gmax), s | | 16.0 | | 31.0 | | | 9.0 | 18.0 |
| Max Q Clear Time (g_c+I1), s | | 7.4 | | 24.0 | | | 5.5 | 7.3 |
| Green Ext Time (p_c), s | | 1.0 | | 5.3 | | | 0.1 | 2.2 |

| Intersection Summary | |
|---|---|
| HCM 2010 Ctrl Delay | 13.8 |
| HCM 2010 LOS | B |

Notes

User approved volume balancing among the lanes for turning movement.

| Lane Group | EBL | EBT | WBL | WBT | NBL | NBT | SBL | SBT |
|---|---|---|---|---|---|---|---|---|
| Lane Group Flow (vph) | 173 | 1743 | 109 | 829 | 305 | 133 | 125 | 219 |
| v/c Ratio | 0.47 | 1.55 | 0.30 | 0.73 | 1.05 | 0.23 | 0.35 | 0.35 |
| Control Delay | 38.9 | 276.9 | 50.1 | 22.0 | 101.2 | 10.5 | 29.4 | 7.4 |
| Queue Delay | 0.0 | 0.0 | 0.0 | 0.0 | 0.0 | 0.0 | 0.0 | 0.0 |
| Total Delay | 38.9 | 276.9 | 50.1 | 22.0 | 101.2 | 10.5 | 29.4 | 7.4 |
| Queue Length 50th (ft) | 96 | ~828 | 75 | 93 | ~212 | 19 | 61 | 13 |
| Queue Length 95th (ft) | 163 | #970 | m110 | 136 | #378 | 62 | 112 | 67 |
| Internal Link Dist (ft) | | 600 | | 925 | | 1078 | | 400 |
| Turn Bay Length (ft) | 130 | | 60 | | 90 | | 90 | |
| Base Capacity (vph) | 368 | 1128 | 368 | 1133 | 291 | 568 | 362 | 620 |
| Starvation Cap Reductn | 0 | 0 | 0 | 0 | 0 | 0 | 0 | 0 |
| Spillback Cap Reductn | 0 | 0 | 0 | 0 | 0 | 0 | 0 | 0 |
| Storage Cap Reductn | 0 | 0 | 0 | 0 | 0 | 0 | 0 | 0 |
| Reduced v/c Ratio | 0.47 | 1.55 | 0.30 | 0.73 | 1.05 | 0.23 | 0.35 | 0.35 |

Intersection Summary

~ Volume exceeds capacity, queue is theoretically infinite.
Queue shown is maximum after two cycles.

# 95th percentile volume exceeds capacity, queue may be longer.
Queue shown is maximum after two cycles.

m Volume for 95th percentile queue is metered by upstream signal.

| Movement | EBL | EBT | EBR | WBL | WBT | WBR | NBL | NBT | NBR | SBL | SBT | SBR |
|---|---|---|---|---|---|---|---|---|---|---|---|---|
| Lane Configurations | | | | | | | | | | | | |
| Traffic Volume (veh/h) | 159 | 1292 | 312 | 100 | 710 | 52 | 281 | 39 | 84 | 115 | 28 | 174 |
| Future Volume (veh/h) | 159 | 1292 | 312 | 100 | 710 | 52 | 281 | 39 | 84 | 115 | 28 | 174 |
| Number | 7 | 4 | 14 | 3 | 8 | 18 | 5 | 2 | 12 | 1 | 6 | 16 |
| Initial Q (Qb), veh | 0 | 0 | 0 | 0 | 0 | 0 | 0 | 0 | 0 | 0 | 0 | 0 |
| Ped-Bike Adj(A_pbT) | 1.00 | | 1.00 | 1.00 | | 1.00 | 1.00 | | 1.00 | 1.00 | | 1.00 |
| Parking Bus, Adj | 1.00 | 1.00 | 1.00 | 1.00 | 1.00 | 1.00 | 1.00 | 1.00 | 1.00 | 1.00 | 1.00 | 1.00 |
| Adj Sat Flow, veh/h/ln | 1765 | 1765 | 1800 | 1765 | 1765 | 1800 | 1765 | 1765 | 1800 | 1765 | 1765 | 1800 |
| Adj Flow Rate, veh/h | 173 | 1404 | 339 | 109 | 772 | 57 | 305 | 42 | 91 | 125 | 30 | 189 |
| Adj No. of Lanes | 1 | 2 | 0 | 1 | 2 | 0 | 1 | 1 | 0 | 1 | 1 | 0 |
| Peak Hour Factor | 0.92 | 0.92 | 0.92 | 0.92 | 0.92 | 0.92 | 0.92 | 0.92 | 0.92 | 0.92 | 0.92 | 0.92 |
| Percent Heavy Veh, % | 2 | 2 | 2 | 2 | 2 | 2 | 2 | 2 | 2 | 2 | 2 | 2 |
| Cap, veh/h | 370 | 916 | 216 | 370 | 1077 | 79 | 311 | 159 | 345 | 394 | 67 | 423 |
| Arrive On Green | 0.22 | 0.34 | 0.34 | 0.22 | 0.34 | 0.34 | 0.32 | 0.32 | 0.32 | 0.32 | 0.32 | 0.32 |
| Sat Flow, veh/h | 1681 | 2695 | 635 | 1681 | 3166 | 234 | 1157 | 497 | 1077 | 1252 | 210 | 1322 |
| Grp Volume(v), veh/h | 173 | 860 | 883 | 109 | 409 | 420 | 305 | 0 | 133 | 125 | 0 | 219 |
| Grp Sat Flow(s),veh/h/ln | 1681 | 1676 | 1653 | 1681 | 1676 | 1723 | 1157 | 0 | 1575 | 1252 | 0 | 1531 |
| Q Serve(g_s), s | 9.0 | 34.0 | 34.0 | 5.4 | 21.3 | 21.3 | 20.7 | 0.0 | 6.3 | 8.2 | 0.0 | 11.3 |
| Cycle Q Clear(g_c), s | 9.0 | 34.0 | 34.0 | 5.4 | 21.3 | 21.3 | 32.0 | 0.0 | 6.3 | 14.5 | 0.0 | 11.3 |
| Prop In Lane | 1.00 | | 0.38 | 1.00 | | 0.14 | 1.00 | | 0.68 | 1.00 | | 0.86 |
| Lane Grp Cap(c), veh/h | 370 | 570 | 562 | 370 | 570 | 586 | 311 | 0 | 504 | 394 | 0 | 490 |
| V/C Ratio(X) | 0.47 | 1.51 | 1.57 | 0.29 | 0.72 | 0.72 | 0.98 | 0.00 | 0.26 | 0.32 | 0.00 | 0.45 |
| Avail Cap(c_a), veh/h | 370 | 570 | 562 | 370 | 570 | 586 | 311 | 0 | 504 | 394 | 0 | 490 |
| HCM Platoon Ratio | 1.00 | 1.00 | 1.00 | 1.00 | 1.00 | 1.00 | 1.00 | 1.00 | 1.00 | 1.00 | 1.00 | 1.00 |
| Upstream Filter(I) | 1.00 | 1.00 | 1.00 | 1.00 | 1.00 | 1.00 | 1.00 | 0.00 | 1.00 | 1.00 | 0.00 | 1.00 |
| Uniform Delay (d), s/veh | 33.9 | 33.0 | 33.0 | 32.5 | 28.8 | 28.8 | 41.9 | 0.0 | 25.3 | 30.6 | 0.0 | 27.0 |
| Incr Delay (d2), s/veh | 4.2 | 238.0 | 265.6 | 2.0 | 7.6 | 7.4 | 46.4 | 0.0 | 1.3 | 2.1 | 0.0 | 2.9 |
| Initial Q Delay(d3),s/veh | 0.0 | 0.0 | 0.0 | 0.0 | 0.0 | 0.0 | 0.0 | 0.0 | 0.0 | 0.0 | 0.0 | 0.0 |
| %ile BackOfQ(50%),veh/ln | 4.6 | 53.4 | 56.9 | 2.7 | 11.0 | 11.2 | 12.4 | 0.0 | 2.9 | 3.1 | 0.0 | 5.2 |
| LnGrp Delay(d),s/veh | 38.1 | 271.0 | 298.6 | 34.6 | 36.4 | 36.2 | 88.3 | 0.0 | 26.5 | 32.8 | 0.0 | 29.9 |
| LnGrp LOS | D | F | F | C | D | D | F | | C | C | | C |
| Approach Vol, veh/h | | 1916 | | | 938 | | | 438 | | | 344 | |
| Approach Delay, s/veh | | 262.7 | | | 36.1 | | | 69.5 | | | 30.9 | |
| Approach LOS | | F | | | D | | | E | | | C | |

| Timer | 1 | 2 | 3 | 4 | 5 | 6 | 7 | 8 |
|---|---|---|---|---|---|---|---|---|
| Assigned Phs | | 2 | 3 | 4 | | 6 | 7 | 8 |
| Phs Duration (G+Y+Rc), s | | 36.0 | 26.0 | 38.0 | | 36.0 | 26.0 | 38.0 |
| Change Period (Y+Rc), s | | 4.0 | 4.0 | 4.0 | | 4.0 | 4.0 | 4.0 |
| Max Green Setting (Gmax), s | | 32.0 | 22.0 | 34.0 | | 32.0 | 22.0 | 34.0 |
| Max Q Clear Time (g_c+I1), s | | 34.0 | 7.4 | 36.0 | | 16.5 | 11.0 | 23.3 |
| Green Ext Time (p_c), s | | 0.0 | 0.2 | 0.0 | | 1.6 | 0.3 | 3.9 |

| Intersection Summary | |
|---|---|
| HCM 2010 Ctrl Delay | 159.0 |
| HCM 2010 LOS | F |

| Intersection | |
|---|---|
| Intersection Delay, s/veh | 5.1 |
| Intersection LOS | A |

| Approach | EB | WB | SB |
|---|---|---|---|
| Entry Lanes | 1 | 1 | 1 |
| Conflicting Circle Lanes | 1 | 1 | 1 |
| Adj Approach Flow, veh/h | 95 | 224 | 169 |
| Demand Flow Rate, veh/h | 97 | 229 | 172 |
| Vehicles Circulating, veh/h | 150 | 15 | 130 |
| Vehicles Exiting, veh/h | 152 | 232 | 114 |
| Follow-Up Headway, s | 3.186 | 3.186 | 3.186 |
| Ped Vol Crossing Leg, #/h | 0 | 0 | 0 |
| Ped Cap Adj | 1.000 | 1.000 | 1.000 |
| Approach Delay, s/veh | 4.7 | 5.2 | 5.3 |
| Approach LOS | A | A | A |

| Lane | Left | Left | Left |
|---|---|---|---|
| Designated Moves | LT | TR | LR |
| Assumed Moves | LT | TR | LR |
| RT Channelized | | | |
| Lane Util | 1.000 | 1.000 | 1.000 |
| Critical Headway, s | 5.193 | 5.193 | 5.193 |
| Entry Flow, veh/h | 97 | 229 | 172 |
| Cap Entry Lane, veh/h | 973 | 1113 | 992 |
| Entry HV Adj Factor | 0.983 | 0.980 | 0.983 |
| Flow Entry, veh/h | 95 | 224 | 169 |
| Cap Entry, veh/h | 956 | 1091 | 975 |
| V/C Ratio | 0.100 | 0.206 | 0.173 |
| Control Delay, s/veh | 4.7 | 5.2 | 5.3 |
| LOS | A | A | A |
| 95th %tile Queue, veh | 0 | 1 | 1 |

| Intersection | |
|---|---|
| Int Delay, s/veh | 4.2 |

| Movement | EBL | EBT | WBT | WBR | SBL | SBR |
|---|---|---|---|---|---|---|
| Lane Configurations | | | | | | |
| Traffic Vol, veh/h | 14 | 74 | 117 | 89 | 135 | 20 |
| Future Vol, veh/h | 14 | 74 | 117 | 89 | 135 | 20 |
| Conflicting Peds, #/hr | 0 | 0 | 0 | 0 | 0 | 0 |
| Sign Control | Free | Free | Free | Free | Stop | Stop |
| RT Channelized | - | None | - | None | - | None |
| Storage Length | - | - | - | - | 0 | - |
| Veh in Median Storage, # | - | 0 | 0 | - | 0 | - |
| Grade, % | - | 0 | 0 | - | 0 | - |
| Peak Hour Factor | 92 | 92 | 92 | 92 | 92 | 92 |
| Heavy Vehicles, % | 2 | 2 | 2 | 2 | 2 | 2 |
| Mvmt Flow | 15 | 80 | 127 | 97 | 147 | 22 |

| Major/Minor | Major1 | | Major2 | | Minor2 | |
|---|---|---|---|---|---|---|
| Conflicting Flow All | 224 | 0 | - | 0 | 286 | 176 |
| Stage 1 | - | - | - | - | 176 | - |
| Stage 2 | - | - | - | - | 110 | - |
| Critical Hdwy | 4.12 | - | - | - | 6.42 | 6.22 |
| Critical Hdwy Stg 1 | - | - | - | - | 5.42 | - |
| Critical Hdwy Stg 2 | - | - | - | - | 5.42 | - |
| Follow-up Hdwy | 2.218 | - | - | - | 3.518 | 3.318 |
| Pot Cap-1 Maneuver | 1345 | - | - | - | 704 | 867 |
| Stage 1 | - | - | - | - | 855 | - |
| Stage 2 | - | - | - | - | 915 | - |
| Platoon blocked, % | | - | - | - | | |
| Mov Cap-1 Maneuver | 1345 | - | - | - | 696 | 867 |
| Mov Cap-2 Maneuver | - | - | - | - | 696 | - |
| Stage 1 | - | - | - | - | 845 | - |
| Stage 2 | - | - | - | - | 915 | - |

| Approach | EB | WB | SB |
|---|---|---|---|
| HCM Control Delay, s | 1.2 | 0 | 11.6 |
| HCM LOS | | | B |

| Minor Lane/Major Mvmt | EBL | EBT | WBT | WBR | SBLn1 |
|---|---|---|---|---|---|
| Capacity (veh/h) | 1345 | - | - | - | 714 |
| HCM Lane V/C Ratio | 0.011 | - | - | - | 0.236 |
| HCM Control Delay (s) | 7.7 | 0 | - | - | 11.6 |
| HCM Lane LOS | A | A | - | - | B |
| HCM 95th %tile Q(veh) | 0 | - | - | - | 0.9 |

| Intersection | |
|---|---|
| Intersection Delay, s/veh | 8.8 |
| Intersection LOS | A |

| Movement | EBL | EBT | WBT | WBR | SBL | SBR |
|---|---|---|---|---|---|---|
| Lane Configurations | | | | | | |
| Traffic Vol, veh/h | 14 | 74 | 117 | 89 | 135 | 20 |
| Future Vol, veh/h | 14 | 74 | 117 | 89 | 135 | 20 |
| Peak Hour Factor | 0.92 | 0.92 | 0.92 | 0.92 | 0.92 | 0.92 |
| Heavy Vehicles, % | 2 | 2 | 2 | 2 | 2 | 2 |
| Mvmt Flow | 15 | 80 | 127 | 97 | 147 | 22 |
| Number of Lanes | 0 | 1 | 1 | 0 | 1 | 0 |

| Approach | EB | WB | SB |
|---|---|---|---|
| Opposing Approach | WB | EB | |
| Opposing Lanes | 1 | 1 | 0 |
| Conflicting Approach Left | SB | | WB |
| Conflicting Lanes Left | 1 | 0 | 1 |
| Conflicting Approach Right | | SB | EB |
| Conflicting Lanes Right | 0 | 1 | 1 |
| HCM Control Delay | 8.3 | 8.7 | 9.1 |
| HCM LOS | A | A | A |

| Lane | EBLn1 | WBLn1 | SBLn1 |
|---|---|---|---|
| Vol Left, % | 16% | 0% | 87% |
| Vol Thru, % | 84% | 57% | 0% |
| Vol Right, % | 0% | 43% | 13% |
| Sign Control | Stop | Stop | Stop |
| Traffic Vol by Lane | 88 | 206 | 155 |
| LT Vol | 14 | 0 | 135 |
| Through Vol | 74 | 117 | 0 |
| RT Vol | 0 | 89 | 20 |
| Lane Flow Rate | 96 | 224 | 168 |
| Geometry Grp | 1 | 1 | 1 |
| Degree of Util (X) | 0.123 | 0.262 | 0.222 |
| Departure Headway (Hd) | 4.621 | 4.205 | 4.734 |
| Convergence, Y/N | Yes | Yes | Yes |
| Cap | 776 | 855 | 758 |
| Service Time | 2.647 | 2.225 | 2.761 |
| HCM Lane V/C Ratio | 0.124 | 0.262 | 0.222 |
| HCM Control Delay | 8.3 | 8.7 | 9.1 |
| HCM Lane LOS | A | A | A |
| HCM 95th-tile Q | 0.4 | 1.1 | 0.8 |

| Intersection | |
|---|---|
| Int Delay, s/veh | 0.8 |

| Movement | EBT | EBR | WBL | WBT | NBL | NBR |
|---|---|---|---|---|---|---|
| Lane Configurations | | | | | | |
| Traffic Vol, veh/h | 1146 | 17 | 93 | 884 | 2 | 29 |
| Future Vol, veh/h | 1146 | 17 | 93 | 884 | 2 | 29 |
| Conflicting Peds, #/hr | 0 | 0 | 0 | 0 | 0 | 0 |
| Sign Control | Free | Free | Free | Free | Stop | Stop |
| RT Channelized | - | None | - | None | - | None |
| Storage Length | - | - | 90 | - | 0 | - |
| Veh in Median Storage, # | 0 | - | - | 0 | 0 | - |
| Grade, % | 0 | - | - | 0 | 0 | - |
| Peak Hour Factor | 92 | 92 | 92 | 92 | 92 | 92 |
| Heavy Vehicles, % | 2 | 2 | 2 | 2 | 2 | 2 |
| Mvmt Flow | 1246 | 18 | 101 | 961 | 2 | 32 |

| Major/Minor | Major1 | | Major2 | | Minor1 | |
|---|---|---|---|---|---|---|
| Conflicting Flow All | 0 | 0 | 1264 | 0 | 1938 | 632 |
| Stage 1 | - | - | - | - | 1255 | - |
| Stage 2 | - | - | - | - | 683 | - |
| Critical Hdwy | - | - | 4.14 | - | 6.84 | 6.94 |
| Critical Hdwy Stg 1 | - | - | - | - | 5.84 | - |
| Critical Hdwy Stg 2 | - | - | - | - | 5.84 | - |
| Follow-up Hdwy | - | - | 2.22 | - | 3.52 | 3.32 |
| Pot Cap-1 Maneuver | - | - | 546 | - | 57 | 423 |
| Stage 1 | - | - | - | - | 232 | - |
| Stage 2 | - | - | - | - | 463 | - |
| Platoon blocked, % | - | - | | - | | |
| Mov Cap-1 Maneuver | - | - | 546 | - | 46 | 423 |
| Mov Cap-2 Maneuver | - | - | - | - | 132 | - |
| Stage 1 | - | - | - | - | 189 | - |
| Stage 2 | - | - | - | - | 463 | - |

| Approach | EB | WB | NB |
|---|---|---|---|
| HCM Control Delay, s | 0 | 1.2 | 15.7 |
| HCM LOS | | | C |

| Minor Lane/Major Mvmt | NBLn1 | EBT | EBR | WBL | WBT |
|---|---|---|---|---|---|
| Capacity (veh/h) | 370 | - | - | 546 | - |
| HCM Lane V/C Ratio | 0.091 | - | - | 0.185 | - |
| HCM Control Delay (s) | 15.7 | - | - | 13.1 | - |
| HCM Lane LOS | C | - | - | B | - |
| HCM 95th %tile Q(veh) | 0.3 | - | - | 0.7 | - |

| Lane Group | EBL | EBT | WBL | WBT | NBL | NBT | SBL | SBT |
|---|---|---|---|---|---|---|---|---|
| Lane Group Flow (vph) | 15 | 1571 | 198 | 686 | 258 | 176 | 10 | 49 |
| v/c Ratio | 0.06 | 1.75 | 0.79 | 0.76 | 0.53 | 0.22 | 0.03 | 0.11 |
| Control Delay | 29.1 | 369.0 | 64.0 | 39.9 | 43.7 | 4.0 | 27.4 | 17.9 |
| Queue Delay | 0.0 | 0.0 | 0.0 | 0.0 | 0.0 | 0.0 | 0.0 | 0.0 |
| Total Delay | 29.1 | 369.0 | 64.0 | 39.9 | 43.7 | 4.0 | 27.4 | 17.9 |
| Queue Length 50th (ft) | 10 | ~809 | 123 | 211 | 79 | 5 | 5 | 12 |
| Queue Length 95th (ft) | m9 | m#476 | #237 | 279 | 119 | 42 | 18 | 41 |
| Internal Link Dist (ft) | | 925 | | 1050 | | 192 | | 222 |
| Turn Bay Length (ft) | 90 | | 100 | | | | | |
| Base Capacity (vph) | 251 | 900 | 251 | 904 | 487 | 787 | 307 | 459 |
| Starvation Cap Reductn | 0 | 0 | 0 | 0 | 0 | 0 | 0 | 0 |
| Spillback Cap Reductn | 0 | 0 | 0 | 0 | 0 | 0 | 0 | 0 |
| Storage Cap Reductn | 0 | 0 | 0 | 0 | 0 | 0 | 0 | 0 |
| Reduced v/c Ratio | 0.06 | 1.75 | 0.79 | 0.76 | 0.53 | 0.22 | 0.03 | 0.11 |

Intersection Summary

~ Volume exceeds capacity, queue is theoretically infinite.
Queue shown is maximum after two cycles.

# 95th percentile volume exceeds capacity, queue may be longer.
Queue shown is maximum after two cycles.

m Volume for 95th percentile queue is metered by upstream signal.

# HCM 2010 Signalized Intersection Summary
## 150: Yucaipa Blvd & Knollhaven Lane

01/09/2019

| Movement | EBL | EBT | EBR | WBL | WBT | WBR | NBL | NBT | NBR | SBL | SBT | SBR |
|---|---|---|---|---|---|---|---|---|---|---|---|---|
| Lane Configurations | | | | | | | | | | | | |
| Traffic Volume (veh/h) | 14 | 1130 | 316 | 182 | 628 | 3 | 237 | 14 | 148 | 9 | 24 | 21 |
| Future Volume (veh/h) | 14 | 1130 | 316 | 182 | 628 | 3 | 237 | 14 | 148 | 9 | 24 | 21 |
| Number | 7 | 4 | 14 | 3 | 8 | 18 | 5 | 2 | 12 | 1 | 6 | 16 |
| Initial Q (Qb), veh | 0 | 0 | 0 | 0 | 0 | 0 | 0 | 0 | 0 | 0 | 0 | 0 |
| Ped-Bike Adj(A_pbT) | 1.00 | | 1.00 | 1.00 | | 1.00 | 1.00 | | 1.00 | 1.00 | | 1.00 |
| Parking Bus, Adj | 1.00 | 1.00 | 1.00 | 1.00 | 1.00 | 1.00 | 1.00 | 1.00 | 1.00 | 1.00 | 1.00 | 1.00 |
| Adj Sat Flow, veh/h/ln | 1765 | 1765 | 1800 | 1765 | 1765 | 1800 | 1765 | 1765 | 1800 | 1765 | 1765 | 1800 |
| Adj Flow Rate, veh/h | 15 | 1228 | 343 | 198 | 683 | 3 | 258 | 15 | 161 | 10 | 26 | 23 |
| Adj No. of Lanes | 1 | 3 | 0 | 1 | 3 | 0 | 2 | 1 | 0 | 1 | 1 | 0 |
| Peak Hour Factor | 0.92 | 0.92 | 0.92 | 0.92 | 0.92 | 0.92 | 0.92 | 0.92 | 0.92 | 0.92 | 0.92 | 0.92 |
| Percent Heavy Veh, % | 2 | 2 | 2 | 2 | 2 | 2 | 2 | 2 | 2 | 2 | 2 | 2 |
| Cap, veh/h | 24 | 1304 | 364 | 242 | 2365 | 10 | 353 | 43 | 464 | 306 | 145 | 128 |
| Arrive On Green | 0.01 | 0.35 | 0.35 | 0.14 | 0.48 | 0.48 | 0.11 | 0.33 | 0.33 | 0.17 | 0.17 | 0.17 |
| Sat Flow, veh/h | 1681 | 3746 | 1046 | 1681 | 4951 | 22 | 3261 | 129 | 1390 | 1204 | 865 | 765 |
| Grp Volume(v), veh/h | 15 | 1053 | 518 | 198 | 443 | 243 | 258 | 0 | 176 | 10 | 0 | 49 |
| Grp Sat Flow(s),veh/h/ln | 1681 | 1606 | 1580 | 1681 | 1606 | 1761 | 1630 | 0 | 1519 | 1204 | 0 | 1630 |
| Q Serve(g_s), s | 0.6 | 21.9 | 21.9 | 7.9 | 5.8 | 5.8 | 5.3 | 0.0 | 6.0 | 0.5 | 0.0 | 1.8 |
| Cycle Q Clear(g_c), s | 0.6 | 21.9 | 21.9 | 7.9 | 5.8 | 5.8 | 5.3 | 0.0 | 6.0 | 0.5 | 0.0 | 1.8 |
| Prop In Lane | 1.00 | | 0.66 | 1.00 | | 0.01 | 1.00 | | 0.91 | 1.00 | | 0.47 |
| Lane Grp Cap(c), veh/h | 24 | 1118 | 550 | 242 | 1534 | 841 | 353 | 0 | 507 | 306 | 0 | 273 |
| V/C Ratio(X) | 0.62 | 0.94 | 0.94 | 0.82 | 0.29 | 0.29 | 0.73 | 0.00 | 0.35 | 0.03 | 0.00 | 0.18 |
| Avail Cap(c_a), veh/h | 244 | 1119 | 550 | 390 | 1534 | 841 | 473 | 0 | 507 | 306 | 0 | 273 |
| HCM Platoon Ratio | 1.00 | 1.00 | 1.00 | 1.00 | 1.00 | 1.00 | 1.00 | 1.00 | 1.00 | 1.00 | 1.00 | 1.00 |
| Upstream Filter(I) | 1.00 | 1.00 | 1.00 | 1.00 | 1.00 | 1.00 | 1.00 | 0.00 | 1.00 | 1.00 | 0.00 | 1.00 |
| Uniform Delay (d), s/veh | 33.8 | 21.8 | 21.8 | 28.6 | 10.9 | 10.9 | 29.8 | 0.0 | 17.3 | 24.1 | 0.0 | 24.6 |
| Incr Delay (d2), s/veh | 22.7 | 15.0 | 24.8 | 7.0 | 0.1 | 0.2 | 3.8 | 0.0 | 1.9 | 0.2 | 0.0 | 1.4 |
| Initial Q Delay(d3),s/veh | 0.0 | 0.0 | 0.0 | 0.0 | 0.0 | 0.0 | 0.0 | 0.0 | 0.0 | 0.0 | 0.0 | 0.0 |
| %ile BackOfQ(50%),veh/ln | 0.4 | 12.0 | 13.3 | 4.1 | 2.5 | 2.8 | 2.6 | 0.0 | 2.8 | 0.2 | 0.0 | 0.9 |
| LnGrp Delay(d),s/veh | 56.4 | 36.8 | 46.6 | 35.6 | 11.0 | 11.1 | 33.6 | 0.0 | 19.2 | 24.3 | 0.0 | 26.1 |
| LnGrp LOS | E | D | D | D | B | B | C | | B | C | | C |
| Approach Vol, veh/h | | 1586 | | | 884 | | | 434 | | | 59 | |
| Approach Delay, s/veh | | 40.2 | | | 16.6 | | | 27.7 | | | 25.8 | |
| Approach LOS | | D | | | B | | | C | | | C | |

| Timer | 1 | 2 | 3 | 4 | 5 | 6 | 7 | 8 |
|---|---|---|---|---|---|---|---|---|
| Assigned Phs | | 2 | 3 | 4 | 5 | 6 | 7 | 8 |
| Phs Duration (G+Y+Rc), s | | 27.0 | 13.9 | 28.0 | 11.5 | 15.5 | 5.0 | 36.9 |
| Change Period (Y+Rc), s | | 4.0 | 4.0 | 4.0 | 4.0 | 4.0 | 4.0 | 4.0 |
| Max Green Setting (Gmax), s | | 23.0 | 16.0 | 24.0 | 10.0 | 9.0 | 10.0 | 30.0 |
| Max Q Clear Time (g_c+I1), s | | 8.0 | 9.9 | 23.9 | 7.3 | 3.8 | 2.6 | 7.8 |
| Green Ext Time (p_c), s | | 0.9 | 0.3 | 0.1 | 0.2 | 0.1 | 0.0 | 4.5 |

| Intersection Summary | |
|---|---|
| HCM 2010 Ctrl Delay | 31.0 |
| HCM 2010 LOS | C |

Notes

User approved pedestrian interval to be less than phase max green.

| Lane Group | EBT | WBL | WBT | SBL | SBT |
|---|---|---|---|---|---|
| Lane Group Flow (vph) | 375 | 246 | 253 | 386 | 368 |
| v/c Ratio | 0.56 | 0.77 | 0.17 | 0.59 | 0.56 |
| Control Delay | 24.1 | 41.5 | 9.1 | 20.4 | 17.0 |
| Queue Delay | 0.0 | 0.0 | 0.0 | 0.0 | 0.0 |
| Total Delay | 24.1 | 41.5 | 9.1 | 20.4 | 17.0 |
| Queue Length 50th (ft) | 63 | 84 | 26 | 111 | 89 |
| Queue Length 95th (ft) | 92 | #182 | 37 | #250 | #193 |
| Internal Link Dist (ft) | 117 | | 320 | | 250 |
| Turn Bay Length (ft) | | 115 | | | |
| Base Capacity (vph) | 893 | 335 | 1788 | 653 | 659 |
| Starvation Cap Reductn | 0 | 0 | 0 | 0 | 0 |
| Spillback Cap Reductn | 0 | 0 | 0 | 0 | 0 |
| Storage Cap Reductn | 0 | 0 | 0 | 0 | 0 |
| Reduced v/c Ratio | 0.42 | 0.73 | 0.14 | 0.59 | 0.56 |

Intersection Summary

# 95th percentile volume exceeds capacity, queue may be longer.
Queue shown is maximum after two cycles.

| Movement | EBL | EBT | EBR | WBL | WBT | WBR | NBL | NBT | NBR | SBL | SBT | SBR |
|---|---|---|---|---|---|---|---|---|---|---|---|---|
| Lane Configurations | | | | | | | | | | | | |
| Traffic Volume (veh/h) | 0 | 331 | 14 | 226 | 233 | 0 | 0 | 0 | 0 | 573 | 3 | 118 |
| Future Volume (veh/h) | 0 | 331 | 14 | 226 | 233 | 0 | 0 | 0 | 0 | 573 | 3 | 118 |
| Number | 7 | 4 | 14 | 3 | 8 | 18 | | | | 1 | 6 | 16 |
| Initial Q (Qb), veh | 0 | 0 | 0 | 0 | 0 | 0 | | | | 0 | 0 | 0 |
| Ped-Bike Adj(A_pbT) | 1.00 | | 1.00 | 1.00 | | 1.00 | | | | 1.00 | | 1.00 |
| Parking Bus, Adj | 1.00 | 1.00 | 1.00 | 1.00 | 1.00 | 1.00 | | | | 1.00 | 1.00 | 1.00 |
| Adj Sat Flow, veh/h/ln | 0 | 1765 | 1800 | 1765 | 1765 | 0 | | | | 1765 | 1765 | 1800 |
| Adj Flow Rate, veh/h | 0 | 360 | 15 | 246 | 253 | 0 | | | | 745 | 0 | 0 |
| Adj No. of Lanes | 0 | 2 | 0 | 1 | 2 | 0 | | | | 2 | 1 | 0 |
| Peak Hour Factor | 0.92 | 0.92 | 0.92 | 0.92 | 0.92 | 0.92 | | | | 0.92 | 0.92 | 0.92 |
| Percent Heavy Veh, % | 0 | 2 | 2 | 2 | 2 | 0 | | | | 2 | 2 | 2 |
| Cap, veh/h | 0 | 521 | 22 | 292 | 1339 | 0 | | | | 1570 | 824 | 0 |
| Arrive On Green | 0.00 | 0.16 | 0.16 | 0.17 | 0.40 | 0.00 | | | | 0.47 | 0.00 | 0.00 |
| Sat Flow, veh/h | 0 | 3369 | 136 | 1681 | 3441 | 0 | | | | 3361 | 1765 | 0 |
| Grp Volume(v), veh/h | 0 | 183 | 192 | 246 | 253 | 0 | | | | 745 | 0 | 0 |
| Grp Sat Flow(s),veh/h/ln | 0 | 1676 | 1741 | 1681 | 1676 | 0 | | | | 1681 | 1765 | 0 |
| Q Serve(g_s), s | 0.0 | 6.2 | 6.2 | 8.5 | 2.9 | 0.0 | | | | 9.1 | 0.0 | 0.0 |
| Cycle Q Clear(g_c), s | 0.0 | 6.2 | 6.2 | 8.5 | 2.9 | 0.0 | | | | 9.1 | 0.0 | 0.0 |
| Prop In Lane | 0.00 | | 0.08 | 1.00 | | 0.00 | | | | 1.00 | | 0.00 |
| Lane Grp Cap(c), veh/h | 0 | 266 | 276 | 292 | 1339 | 0 | | | | 1570 | 824 | 0 |
| V/C Ratio(X) | 0.00 | 0.69 | 0.69 | 0.84 | 0.19 | 0.00 | | | | 0.47 | 0.00 | 0.00 |
| Avail Cap(c_a), veh/h | 0 | 447 | 464 | 336 | 1788 | 0 | | | | 1570 | 824 | 0 |
| HCM Platoon Ratio | 1.00 | 1.00 | 1.00 | 1.00 | 1.00 | 1.00 | | | | 1.00 | 1.00 | 1.00 |
| Upstream Filter(I) | 0.00 | 1.00 | 1.00 | 0.84 | 0.84 | 0.00 | | | | 1.00 | 0.00 | 0.00 |
| Uniform Delay (d), s/veh | 0.0 | 23.8 | 23.9 | 24.0 | 11.7 | 0.0 | | | | 10.9 | 0.0 | 0.0 |
| Incr Delay (d2), s/veh | 0.0 | 3.2 | 3.1 | 13.4 | 0.1 | 0.0 | | | | 1.0 | 0.0 | 0.0 |
| Initial Q Delay(d3),s/veh | 0.0 | 0.0 | 0.0 | 0.0 | 0.0 | 0.0 | | | | 0.0 | 0.0 | 0.0 |
| %ile BackOfQ(50%),veh/ln | 0.0 | 3.1 | 3.2 | 5.0 | 1.3 | 0.0 | | | | 4.4 | 0.0 | 0.0 |
| LnGrp Delay(d),s/veh | 0.0 | 27.0 | 27.0 | 37.3 | 11.8 | 0.0 | | | | 12.0 | 0.0 | 0.0 |
| LnGrp LOS | | C | C | D | B | | | | | B | | |
| Approach Vol, veh/h | | 375 | | | 499 | | | | | | 745 | |
| Approach Delay, s/veh | | 27.0 | | | 24.4 | | | | | | 12.0 | |
| Approach LOS | | C | | | C | | | | | | B | |

| Timer | 1 | 2 | 3 | 4 | 5 | 6 | 7 | 8 |
|---|---|---|---|---|---|---|---|---|
| Assigned Phs | | | 3 | 4 | | 6 | | 8 |
| Phs Duration (G+Y+Rc), s | | | 14.4 | 13.5 | | 32.0 | | 28.0 |
| Change Period (Y+Rc), s | | | 4.0 | 4.0 | | 4.0 | | 4.0 |
| Max Green Setting (Gmax), s | | | 12.0 | 16.0 | | 20.0 | | 32.0 |
| Max Q Clear Time (g_c+I1), s | | | 10.5 | 8.2 | | 11.1 | | 4.9 |
| Green Ext Time (p_c), s | | | 0.1 | 1.3 | | 2.1 | | 1.6 |

| Intersection Summary | |
|---|---|
| HCM 2010 Ctrl Delay | 19.3 |
| HCM 2010 LOS | B |

Notes

User approved volume balancing among the lanes for turning movement.

| Lane Group | EBL | EBT | WBT | WBR | NBT | NBR |
|---|---|---|---|---|---|---|
| Lane Group Flow (vph) | 100 | 877 | 488 | 815 | 143 | 142 |
| v/c Ratio | 0.51 | 0.60 | 0.53 | 0.54 | 0.22 | 0.22 |
| Control Delay | 30.8 | 12.1 | 16.1 | 5.1 | 5.2 | 5.2 |
| Queue Delay | 0.0 | 0.0 | 0.0 | 0.0 | 0.0 | 0.0 |
| Total Delay | 30.8 | 12.1 | 16.1 | 5.1 | 5.2 | 5.2 |
| Queue Length 50th (ft) | 28 | 90 | 82 | 311 | 5 | 4 |
| Queue Length 95th (ft) | #74 | 116 | m100 | m376 | 37 | 36 |
| Internal Link Dist (ft) | | 320 | 600 | | 228 | |
| Turn Bay Length (ft) | 160 | | | | | |
| Base Capacity (vph) | 201 | 1743 | 1072 | 1500 | 650 | 643 |
| Starvation Cap Reductn | 0 | 0 | 0 | 0 | 0 | 0 |
| Spillback Cap Reductn | 0 | 0 | 0 | 0 | 0 | 0 |
| Storage Cap Reductn | 0 | 0 | 0 | 0 | 0 | 0 |
| Reduced v/c Ratio | 0.50 | 0.50 | 0.46 | 0.54 | 0.22 | 0.22 |

Intersection Summary

# 95th percentile volume exceeds capacity, queue may be longer.
Queue shown is maximum after two cycles.

m Volume for 95th percentile queue is metered by upstream signal.

| Movement | EBL | EBT | EBR | WBL | WBT | WBR | NBL | NBT | NBR | SBL | SBT | SBR |
|---|---|---|---|---|---|---|---|---|---|---|---|---|
| Lane Configurations | | | | | | | | | | | | |
| Traffic Volume (veh/h) | 92 | 807 | 0 | 0 | 449 | 750 | 11 | 0 | 251 | 0 | 0 | 0 |
| Future Volume (veh/h) | 92 | 807 | 0 | 0 | 449 | 750 | 11 | 0 | 251 | 0 | 0 | 0 |
| Number | 7 | 4 | 14 | 3 | 8 | 18 | 5 | 2 | 12 | | | |
| Initial Q (Qb), veh | 0 | 0 | 0 | 0 | 0 | 0 | 0 | 0 | 0 | | | |
| Ped-Bike Adj(A_pbT) | 1.00 | | 1.00 | 1.00 | | 1.00 | 1.00 | | 1.00 | | | |
| Parking Bus, Adj | 1.00 | 1.00 | 1.00 | 1.00 | 1.00 | 1.00 | 1.00 | 1.00 | 1.00 | | | |
| Adj Sat Flow, veh/h/ln | 1765 | 1765 | 1800 | 0 | 1765 | 1765 | 1800 | 1765 | 1765 | | | |
| Adj Flow Rate, veh/h | 100 | 877 | 0 | 0 | 488 | 0 | 0 | 0 | 286 | | | |
| Adj No. of Lanes | 1 | 2 | 0 | 0 | 2 | 1 | 0 | 1 | 2 | | | |
| Peak Hour Factor | 0.92 | 0.92 | 0.92 | 0.92 | 0.92 | 0.92 | 0.92 | 0.92 | 0.92 | | | |
| Percent Heavy Veh, % | 2 | 2 | 2 | 0 | 2 | 2 | 2 | 2 | 2 | | | |
| Cap, veh/h | 125 | 1223 | 0 | 0 | 706 | 316 | 0 | 838 | 1425 | | | |
| Arrive On Green | 0.07 | 0.36 | 0.00 | 0.00 | 0.35 | 0.00 | 0.00 | 0.00 | 0.48 | | | |
| Sat Flow, veh/h | 1681 | 3441 | 0 | 0 | 3441 | 1500 | 0 | 1765 | 3000 | | | |
| Grp Volume(v), veh/h | 100 | 877 | 0 | 0 | 488 | 0 | 0 | 0 | 286 | | | |
| Grp Sat Flow(s),veh/h/ln | 1681 | 1676 | 0 | 0 | 1676 | 1500 | 0 | 1765 | 1500 | | | |
| Q Serve(g_s), s | 2.9 | 11.2 | 0.0 | 0.0 | 6.2 | 0.0 | 0.0 | 0.0 | 2.8 | | | |
| Cycle Q Clear(g_c), s | 2.9 | 11.2 | 0.0 | 0.0 | 6.2 | 0.0 | 0.0 | 0.0 | 2.8 | | | |
| Prop In Lane | 1.00 | | 0.00 | 0.00 | | 1.00 | 0.00 | | 1.00 | | | |
| Lane Grp Cap(c), veh/h | 125 | 1223 | 0 | 0 | 706 | 316 | 0 | 838 | 1425 | | | |
| V/C Ratio(X) | 0.80 | 0.72 | 0.00 | 0.00 | 0.69 | 0.00 | 0.00 | 0.00 | 0.20 | | | |
| Avail Cap(c_a), veh/h | 202 | 1744 | 0 | 0 | 1073 | 480 | 0 | 838 | 1425 | | | |
| HCM Platoon Ratio | 1.00 | 1.00 | 1.00 | 1.00 | 1.67 | 1.67 | 1.00 | 1.00 | 1.00 | | | |
| Upstream Filter(I) | 0.79 | 0.79 | 0.00 | 0.00 | 0.76 | 0.00 | 0.00 | 0.00 | 1.00 | | | |
| Uniform Delay (d), s/veh | 22.8 | 13.7 | 0.0 | 0.0 | 14.8 | 0.0 | 0.0 | 0.0 | 7.6 | | | |
| Incr Delay (d2), s/veh | 9.0 | 0.6 | 0.0 | 0.0 | 0.9 | 0.0 | 0.0 | 0.0 | 0.3 | | | |
| Initial Q Delay(d3),s/veh | 0.0 | 0.0 | 0.0 | 0.0 | 0.0 | 0.0 | 0.0 | 0.0 | 0.0 | | | |
| %ile BackOfQ(50%),veh/ln | 1.7 | 5.2 | 0.0 | 0.0 | 2.9 | 0.0 | 0.0 | 0.0 | 1.2 | | | |
| LnGrp Delay(d),s/veh | 31.8 | 14.3 | 0.0 | 0.0 | 15.7 | 0.0 | 0.0 | 0.0 | 7.9 | | | |
| LnGrp LOS | C | B | | | B | | | | A | | | |
| Approach Vol, veh/h | | 977 | | | 488 | | | 286 | | | | |
| Approach Delay, s/veh | | 16.1 | | | 15.7 | | | 7.9 | | | | |
| Approach LOS | | B | | | B | | | A | | | | |

| Timer | 1 | 2 | 3 | 4 | 5 | 6 | 7 | 8 |
|---|---|---|---|---|---|---|---|---|
| Assigned Phs | | 2 | | 4 | | | 7 | 8 |
| Phs Duration (G+Y+Rc), s | | 27.8 | | 22.2 | | | 7.7 | 14.5 |
| Change Period (Y+Rc), s | | 4.0 | | 4.0 | | | 4.0 | 4.0 |
| Max Green Setting (Gmax), s | | 16.0 | | 26.0 | | | 6.0 | 16.0 |
| Max Q Clear Time (g_c+I1), s | | 4.8 | | 13.2 | | | 4.9 | 8.2 |
| Green Ext Time (p_c), s | | 0.8 | | 5.0 | | | 0.0 | 1.9 |

| Intersection Summary | |
|---|---|
| HCM 2010 Ctrl Delay | 14.7 |
| HCM 2010 LOS | B |

Notes

User approved volume balancing among the lanes for turning movement.

| Lane Group | EBL | EBT | WBL | WBT | WBR | NBL | NBT | SBL | SBT |
|---|---|---|---|---|---|---|---|---|---|
| Lane Group Flow (vph) | 159 | 980 | 53 | 821 | 85 | 282 | 104 | 175 | 199 |
| v/c Ratio | 0.43 | 0.87 | 0.14 | 0.50 | 0.15 | 0.92 | 0.19 | 0.45 | 0.33 |
| Control Delay | 31.8 | 33.2 | 49.5 | 18.9 | 5.0 | 69.0 | 13.3 | 31.6 | 7.5 |
| Queue Delay | 0.0 | 0.0 | 0.0 | 0.0 | 0.0 | 0.0 | 0.0 | 0.0 | 0.0 |
| Total Delay | 31.8 | 33.2 | 49.5 | 18.9 | 5.0 | 69.0 | 13.3 | 31.6 | 7.5 |
| Queue Length 50th (ft) | 64 | 232 | 37 | 66 | 4 | 172 | 21 | 88 | 13 |
| Queue Length 95th (ft) | 133 | #326 | m66 | 80 | m14 | #332 | 60 | 153 | 63 |
| Internal Link Dist (ft) | | 600 | | 925 | | | 1078 | | 400 |
| Turn Bay Length (ft) | 130 | | 300 | | 100 | 90 | | 90 | |
| Base Capacity (vph) | 368 | 1128 | 368 | 1638 | 560 | 307 | 557 | 387 | 608 |
| Starvation Cap Reductn | 0 | 0 | 0 | 0 | 0 | 0 | 0 | 0 | 0 |
| Spillback Cap Reductn | 0 | 0 | 0 | 0 | 0 | 0 | 0 | 0 | 0 |
| Storage Cap Reductn | 0 | 0 | 0 | 0 | 0 | 0 | 0 | 0 | 0 |
| Reduced v/c Ratio | 0.43 | 0.87 | 0.14 | 0.50 | 0.15 | 0.92 | 0.19 | 0.45 | 0.33 |

Intersection Summary

# 95th percentile volume exceeds capacity, queue may be longer.
Queue shown is maximum after two cycles.

m Volume for 95th percentile queue is metered by upstream signal.

| Movement | EBL | EBT | EBR | WBL | WBT | WBR | NBL | NBT | NBR | SBL | SBT | SBR |
|---|---|---|---|---|---|---|---|---|---|---|---|---|
| Lane Configurations | | | | | | | | | | | | |
| Traffic Volume (veh/h) | 146 | 703 | 199 | 49 | 755 | 78 | 259 | 43 | 52 | 161 | 27 | 156 |
| Future Volume (veh/h) | 146 | 703 | 199 | 49 | 755 | 78 | 259 | 43 | 52 | 161 | 27 | 156 |
| Number | 7 | 4 | 14 | 3 | 8 | 18 | 5 | 2 | 12 | 1 | 6 | 16 |
| Initial Q (Qb), veh | 0 | 0 | 0 | 0 | 0 | 0 | 0 | 0 | 0 | 0 | 0 | 0 |
| Ped-Bike Adj(A_pbT) | 1.00 | | 1.00 | 1.00 | | 1.00 | 1.00 | | 1.00 | 1.00 | | 1.00 |
| Parking Bus, Adj | 1.00 | 1.00 | 1.00 | 1.00 | 1.00 | 1.00 | 1.00 | 1.00 | 1.00 | 1.00 | 1.00 | 1.00 |
| Adj Sat Flow, veh/h/ln | 1765 | 1765 | 1800 | 1765 | 1765 | 1765 | 1765 | 1765 | 1800 | 1765 | 1765 | 1800 |
| Adj Flow Rate, veh/h | 159 | 764 | 216 | 53 | 821 | 85 | 282 | 47 | 57 | 175 | 29 | 170 |
| Adj No. of Lanes | 1 | 2 | 0 | 1 | 3 | 1 | 1 | 1 | 0 | 1 | 1 | 0 |
| Peak Hour Factor | 0.92 | 0.92 | 0.92 | 0.92 | 0.92 | 0.92 | 0.92 | 0.92 | 0.92 | 0.92 | 0.92 | 0.92 |
| Percent Heavy Veh, % | 2 | 2 | 2 | 2 | 2 | 2 | 2 | 2 | 2 | 2 | 2 | 2 |
| Cap, veh/h | 370 | 878 | 248 | 370 | 1638 | 510 | 330 | 233 | 282 | 423 | 72 | 419 |
| Arrive On Green | 0.22 | 0.34 | 0.34 | 0.22 | 0.34 | 0.34 | 0.32 | 0.32 | 0.32 | 0.32 | 0.32 | 0.32 |
| Sat Flow, veh/h | 1681 | 2582 | 730 | 1681 | 4818 | 1500 | 1179 | 727 | 882 | 1285 | 223 | 1310 |
| Grp Volume(v), veh/h | 159 | 496 | 484 | 53 | 821 | 85 | 282 | 0 | 104 | 175 | 0 | 199 |
| Grp Sat Flow(s),veh/h/ln | 1681 | 1676 | 1636 | 1681 | 1606 | 1500 | 1179 | 0 | 1609 | 1285 | 0 | 1534 |
| Q Serve(g_s), s | 8.2 | 27.7 | 27.7 | 2.5 | 13.6 | 4.0 | 21.9 | 0.0 | 4.7 | 11.5 | 0.0 | 10.1 |
| Cycle Q Clear(g_c), s | 8.2 | 27.7 | 27.7 | 2.5 | 13.6 | 4.0 | 32.0 | 0.0 | 4.7 | 16.2 | 0.0 | 10.1 |
| Prop In Lane | 1.00 | | 0.45 | 1.00 | | 1.00 | 1.00 | | 0.55 | 1.00 | | 0.85 |
| Lane Grp Cap(c), veh/h | 370 | 570 | 556 | 370 | 1638 | 510 | 330 | 0 | 515 | 423 | 0 | 491 |
| V/C Ratio(X) | 0.43 | 0.87 | 0.87 | 0.14 | 0.50 | 0.17 | 0.86 | 0.00 | 0.20 | 0.41 | 0.00 | 0.41 |
| Avail Cap(c_a), veh/h | 370 | 570 | 556 | 370 | 1638 | 510 | 330 | 0 | 515 | 423 | 0 | 491 |
| HCM Platoon Ratio | 1.00 | 1.00 | 1.00 | 1.00 | 1.00 | 1.00 | 1.00 | 1.00 | 1.00 | 1.00 | 1.00 | 1.00 |
| Upstream Filter(I) | 1.00 | 1.00 | 1.00 | 1.00 | 1.00 | 1.00 | 1.00 | 0.00 | 1.00 | 1.00 | 0.00 | 1.00 |
| Uniform Delay (d), s/veh | 33.6 | 30.9 | 30.9 | 31.4 | 26.3 | 23.1 | 40.0 | 0.0 | 24.7 | 30.6 | 0.0 | 26.6 |
| Incr Delay (d2), s/veh | 3.6 | 16.5 | 16.8 | 0.8 | 1.1 | 0.7 | 23.7 | 0.0 | 0.9 | 3.0 | 0.0 | 2.5 |
| Initial Q Delay(d3),s/veh | 0.0 | 0.0 | 0.0 | 0.0 | 0.0 | 0.0 | 0.0 | 0.0 | 0.0 | 0.0 | 0.0 | 0.0 |
| %ile BackOfQ(50%),veh/ln | 4.2 | 15.4 | 15.1 | 1.3 | 6.2 | 1.7 | 9.9 | 0.0 | 2.2 | 4.4 | 0.0 | 4.6 |
| LnGrp Delay(d),s/veh | 37.2 | 47.4 | 47.8 | 32.2 | 27.4 | 23.8 | 63.7 | 0.0 | 25.6 | 33.6 | 0.0 | 29.0 |
| LnGrp LOS | D | D | D | C | C | C | E | | C | C | | C |
| Approach Vol, veh/h | | 1139 | | | 959 | | | 386 | | | 374 | |
| Approach Delay, s/veh | | 46.2 | | | 27.3 | | | 53.4 | | | 31.2 | |
| Approach LOS | | D | | | C | | | D | | | C | |

| Timer | 1 | 2 | 3 | 4 | 5 | 6 | 7 | 8 |
|---|---|---|---|---|---|---|---|---|
| Assigned Phs | | 2 | 3 | 4 | | 6 | 7 | 8 |
| Phs Duration (G+Y+Rc), s | | 36.0 | 26.0 | 38.0 | | 36.0 | 26.0 | 38.0 |
| Change Period (Y+Rc), s | | 4.0 | 4.0 | 4.0 | | 4.0 | 4.0 | 4.0 |
| Max Green Setting (Gmax), s | | 32.0 | 22.0 | 34.0 | | 32.0 | 22.0 | 34.0 |
| Max Q Clear Time (g_c+I1), s | | 34.0 | 4.5 | 29.7 | | 18.2 | 10.2 | 15.6 |
| Green Ext Time (p_c), s | | 0.0 | 0.1 | 2.4 | | 1.5 | 0.3 | 5.9 |

| Intersection Summary | |
|---|---|
| HCM 2010 Ctrl Delay | 38.9 |
| HCM 2010 LOS | D |

| Intersection | |
|---|---|
| Intersection Delay, s/veh | 4.7 |
| Intersection LOS | A |

| Approach | EB | WB | SB |
|---|---|---|---|
| Entry Lanes | 1 | 1 | 1 |
| Conflicting Circle Lanes | 1 | 1 | 1 |
| Adj Approach Flow, veh/h | 154 | 155 | 119 |
| Demand Flow Rate, veh/h | 157 | 158 | 121 |
| Vehicles Circulating, veh/h | 106 | 24 | 40 |
| Vehicles Exiting, veh/h | 55 | 239 | 142 |
| Follow-Up Headway, s | 3.186 | 3.186 | 3.186 |
| Ped Vol Crossing Leg, #/h | 0 | 0 | 0 |
| Ped Cap Adj | 1.000 | 1.000 | 1.000 |
| Approach Delay, s/veh | 5.0 | 4.6 | 4.4 |
| Approach LOS | A | A | A |

| Lane | Left | Left | Left |
|---|---|---|---|
| Designated Moves | LT | TR | LR |
| Assumed Moves | LT | TR | LR |
| RT Channelized | | | |
| Lane Util | 1.000 | 1.000 | 1.000 |
| Critical Headway, s | 5.193 | 5.193 | 5.193 |
| Entry Flow, veh/h | 157 | 158 | 121 |
| Cap Entry Lane, veh/h | 1016 | 1103 | 1086 |
| Entry HV Adj Factor | 0.983 | 0.982 | 0.983 |
| Flow Entry, veh/h | 154 | 155 | 119 |
| Cap Entry, veh/h | 999 | 1084 | 1068 |
| V/C Ratio | 0.154 | 0.143 | 0.111 |
| Control Delay, s/veh | 5.0 | 4.6 | 4.4 |
| LOS | A | A | A |
| 95th %tile Queue, veh | 1 | 0 | 0 |

| Intersection | |
|---|---|
| Int Delay, s/veh | 3.5 |

| Movement | EBL | EBT | WBT | WBR | SBL | SBR |
|---|---|---|---|---|---|---|
| Lane Configurations | | | | | | |
| Traffic Vol, veh/h | 22 | 120 | 36 | 107 | 96 | 14 |
| Future Vol, veh/h | 22 | 120 | 36 | 107 | 96 | 14 |
| Conflicting Peds, #/hr | 0 | 0 | 0 | 0 | 0 | 0 |
| Sign Control | Free | Free | Free | Free | Stop | Stop |
| RT Channelized | - | None | - | None | - | None |
| Storage Length | - | - | - | - | 0 | - |
| Veh in Median Storage, # | - | 0 | 0 | - | 0 | - |
| Grade, % | - | 0 | 0 | - | 0 | - |
| Peak Hour Factor | 92 | 92 | 92 | 92 | 92 | 92 |
| Heavy Vehicles, % | 2 | 2 | 2 | 2 | 2 | 2 |
| Mvmt Flow | 24 | 130 | 39 | 116 | 104 | 15 |

| Major/Minor | Major1 | | Major2 | | Minor2 | |
|---|---|---|---|---|---|---|
| Conflicting Flow All | 155 | 0 | - | 0 | 275 | 97 |
| Stage 1 | - | - | - | - | 97 | - |
| Stage 2 | - | - | - | - | 178 | - |
| Critical Hdwy | 4.12 | - | - | - | 6.42 | 6.22 |
| Critical Hdwy Stg 1 | - | - | - | - | 5.42 | - |
| Critical Hdwy Stg 2 | - | - | - | - | 5.42 | - |
| Follow-up Hdwy | 2.218 | - | - | - | 3.518 | 3.318 |
| Pot Cap-1 Maneuver | 1425 | - | - | - | 715 | 959 |
| Stage 1 | - | - | - | - | 927 | - |
| Stage 2 | - | - | - | - | 853 | - |
| Platoon blocked, % | | - | - | - | | |
| Mov Cap-1 Maneuver | 1425 | - | - | - | 702 | 959 |
| Mov Cap-2 Maneuver | - | - | - | - | 702 | - |
| Stage 1 | - | - | - | - | 910 | - |
| Stage 2 | - | - | - | - | 853 | - |

| Approach | EB | WB | SB |
|---|---|---|---|
| HCM Control Delay, s | 1.2 | 0 | 10.9 |
| HCM LOS | | | B |

| Minor Lane/Major Mvmt | EBL | EBT | WBT | WBR | SBLn1 |
|---|---|---|---|---|---|
| Capacity (veh/h) | 1425 | - | - | - | 727 |
| HCM Lane V/C Ratio | 0.017 | - | - | - | 0.164 |
| HCM Control Delay (s) | 7.6 | 0 | - | - | 10.9 |
| HCM Lane LOS | A | A | - | - | B |
| HCM 95th %tile Q(veh) | 0.1 | - | - | - | 0.6 |

| Intersection | |
|---|---|
| Intersection Delay, s/veh | 8.3 |
| Intersection LOS | A |

| Movement | EBL | EBT | WBT | WBR | SBL | SBR |
|---|---|---|---|---|---|---|
| Lane Configurations | | | | | | |
| Traffic Vol, veh/h | 22 | 120 | 36 | 107 | 96 | 14 |
| Future Vol, veh/h | 22 | 120 | 36 | 107 | 96 | 14 |
| Peak Hour Factor | 0.92 | 0.92 | 0.92 | 0.92 | 0.92 | 0.92 |
| Heavy Vehicles, % | 2 | 2 | 2 | 2 | 2 | 2 |
| Mvmt Flow | 24 | 130 | 39 | 116 | 104 | 15 |
| Number of Lanes | 0 | 1 | 1 | 0 | 1 | 0 |

| Approach | EB | WB | SB |
|---|---|---|---|
| Opposing Approach | WB | EB | |
| Opposing Lanes | 1 | 1 | 0 |
| Conflicting Approach Left | SB | | WB |
| Conflicting Lanes Left | 1 | 0 | 1 |
| Conflicting Approach Right | | SB | EB |
| Conflicting Lanes Right | 0 | 1 | 1 |
| HCM Control Delay | 8.5 | 7.8 | 8.6 |
| HCM LOS | A | A | A |

| Lane | EBLn1 | WBLn1 | SBLn1 |
|---|---|---|---|
| Vol Left, % | 15% | 0% | 87% |
| Vol Thru, % | 85% | 25% | 0% |
| Vol Right, % | 0% | 75% | 13% |
| Sign Control | Stop | Stop | Stop |
| Traffic Vol by Lane | 142 | 143 | 110 |
| LT Vol | 22 | 0 | 96 |
| Through Vol | 120 | 36 | 0 |
| RT Vol | 0 | 107 | 14 |
| Lane Flow Rate | 154 | 155 | 120 |
| Geometry Grp | 1 | 1 | 1 |
| Degree of Util (X) | 0.189 | 0.17 | 0.156 |
| Departure Headway (Hd) | 4.411 | 3.946 | 4.694 |
| Convergence, Y/N | Yes | Yes | Yes |
| Cap | 815 | 911 | 765 |
| Service Time | 2.426 | 1.961 | 2.712 |
| HCM Lane V/C Ratio | 0.189 | 0.17 | 0.157 |
| HCM Control Delay | 8.5 | 7.8 | 8.6 |
| HCM Lane LOS | A | A | A |
| HCM 95th-tile Q | 0.7 | 0.6 | 0.6 |

| Intersection | |
|---|---|
| Int Delay, s/veh | 0.6 |

| Movement | EBT | EBR | WBL | WBT | NBL | NBR |
|---|---|---|---|---|---|---|
| Lane Configurations | | | | | | |
| Traffic Vol, veh/h | 692 | 3 | 31 | 829 | 4 | 31 |
| Future Vol, veh/h | 692 | 3 | 31 | 829 | 4 | 31 |
| Conflicting Peds, #/hr | 0 | 0 | 0 | 0 | 0 | 0 |
| Sign Control | Free | Free | Free | Free | Stop | Stop |
| RT Channelized | - | None | - | None | - | None |
| Storage Length | - | - | 90 | - | 0 | - |
| Veh in Median Storage, # | 0 | - | - | 0 | 0 | - |
| Grade, % | 0 | - | - | 0 | 0 | - |
| Peak Hour Factor | 92 | 92 | 92 | 92 | 92 | 92 |
| Heavy Vehicles, % | 2 | 2 | 2 | 2 | 2 | 2 |
| Mvmt Flow | 752 | 3 | 34 | 901 | 4 | 34 |

| Major/Minor | Major1 | | Major2 | | Minor1 | |
|---|---|---|---|---|---|---|
| Conflicting Flow All | 0 | 0 | 755 | 0 | 1182 | 378 |
| Stage 1 | - | - | - | - | 754 | - |
| Stage 2 | - | - | - | - | 428 | - |
| Critical Hdwy | - | - | 5.34 | - | 5.74 | 7.14 |
| Critical Hdwy Stg 1 | - | - | - | - | 6.64 | - |
| Critical Hdwy Stg 2 | - | - | - | - | 6.04 | - |
| Follow-up Hdwy | - | - | 3.12 | - | 3.82 | 3.92 |
| Pot Cap-1 Maneuver | - | - | 513 | - | 251 | 529 |
| Stage 1 | - | - | - | - | 341 | - |
| Stage 2 | - | - | - | - | 572 | - |
| Platoon blocked, % | - | - | | - | | |
| Mov Cap-1 Maneuver | - | - | 513 | - | 234 | 529 |
| Mov Cap-2 Maneuver | - | - | - | - | 234 | - |
| Stage 1 | - | - | - | - | 318 | - |
| Stage 2 | - | - | - | - | 572 | - |

| Approach | EB | WB | NB |
|---|---|---|---|
| HCM Control Delay, s | 0 | 0.5 | 13.5 |
| HCM LOS | | | B |

| Minor Lane/Major Mvmt | NBLn1 | EBT | EBR | WBL | WBT |
|---|---|---|---|---|---|
| Capacity (veh/h) | 462 | - | - | 513 | - |
| HCM Lane V/C Ratio | 0.082 | - | - | 0.066 | - |
| HCM Control Delay (s) | 13.5 | - | - | 12.5 | - |
| HCM Lane LOS | B | - | - | B | - |
| HCM 95th %tile Q(veh) | 0.3 | - | - | 0.2 | - |

| Lane Group | EBL | EBT | WBL | WBT | NBL | NBT | SBL | SBT |
|---|---|---|---|---|---|---|---|---|
| Lane Group Flow (vph) | 11 | 798 | 197 | 720 | 288 | 195 | 1 | 26 |
| v/c Ratio | 0.04 | 0.61 | 0.78 | 0.55 | 0.59 | 0.24 | 0.00 | 0.06 |
| Control Delay | 27.6 | 47.0 | 63.7 | 33.2 | 45.2 | 4.0 | 27.0 | 21.5 |
| Queue Delay | 0.0 | 0.0 | 0.0 | 0.0 | 0.0 | 0.0 | 0.0 | 0.0 |
| Total Delay | 27.6 | 47.0 | 63.7 | 33.2 | 45.2 | 4.0 | 27.0 | 21.5 |
| Queue Length 50th (ft) | 6 | 182 | 123 | 144 | 89 | 6 | 1 | 8 |
| Queue Length 95th (ft) | m9 | m217 | #235 | 185 | 132 | 44 | 5 | 29 |
| Internal Link Dist (ft) | | 925 | | 1050 | | 211 | | 222 |
| Turn Bay Length (ft) | 90 | | 100 | | | | | |
| Base Capacity (vph) | 251 | 1319 | 251 | 1300 | 487 | 796 | 302 | 460 |
| Starvation Cap Reductn | 0 | 0 | 0 | 0 | 0 | 0 | 0 | 0 |
| Spillback Cap Reductn | 0 | 0 | 0 | 0 | 0 | 0 | 0 | 0 |
| Storage Cap Reductn | 0 | 0 | 0 | 0 | 0 | 0 | 0 | 0 |
| Reduced v/c Ratio | 0.04 | 0.61 | 0.78 | 0.55 | 0.59 | 0.24 | 0.00 | 0.06 |

Intersection Summary

# 95th percentile volume exceeds capacity, queue may be longer.
Queue shown is maximum after two cycles.

m Volume for 95th percentile queue is metered by upstream signal.

# HCM 2010 Signalized Intersection Summary
## 9: Avenue E & Yucaipa Blvd

01/09/2019

| Movement | EBL | EBT | EBR | WBL | WBT | WBR | NBL | NBT | NBR | SBL | SBT | SBR |
|---|---|---|---|---|---|---|---|---|---|---|---|---|
| Lane Configurations | | | | | | | | | | | | |
| Traffic Volume (veh/h) | 146 | 703 | 199 | 49 | 755 | 78 | 259 | 43 | 52 | 161 | 27 | 156 |
| Future Volume (veh/h) | 146 | 703 | 199 | 49 | 755 | 78 | 259 | 43 | 52 | 161 | 27 | 156 |
| Number | 7 | 4 | 14 | 3 | 8 | 18 | 5 | 2 | 12 | 1 | 6 | 16 |
| Initial Q (Qb), veh | 0 | 0 | 0 | 0 | 0 | 0 | 0 | 0 | 0 | 0 | 0 | 0 |
| Ped-Bike Adj(A_pbT) | 1.00 | | 1.00 | 1.00 | | 1.00 | 1.00 | | 1.00 | 1.00 | | 1.00 |
| Parking Bus, Adj | 1.00 | 1.00 | 1.00 | 1.00 | 1.00 | 1.00 | 1.00 | 1.00 | 1.00 | 1.00 | 1.00 | 1.00 |
| Adj Sat Flow, veh/h/ln | 1765 | 1765 | 1800 | 1765 | 1765 | 1765 | 1765 | 1765 | 1800 | 1765 | 1765 | 1800 |
| Adj Flow Rate, veh/h | 159 | 764 | 216 | 53 | 821 | 85 | 282 | 47 | 57 | 175 | 29 | 170 |
| Adj No. of Lanes | 1 | 2 | 0 | 1 | 3 | 1 | 1 | 1 | 0 | 1 | 1 | 0 |
| Peak Hour Factor | 0.92 | 0.92 | 0.92 | 0.92 | 0.92 | 0.92 | 0.92 | 0.92 | 0.92 | 0.92 | 0.92 | 0.92 |
| Percent Heavy Veh, % | 2 | 2 | 2 | 2 | 2 | 2 | 2 | 2 | 2 | 2 | 2 | 2 |
| Cap, veh/h | 198 | 885 | 250 | 68 | 1277 | 398 | 495 | 290 | 352 | 590 | 89 | 523 |
| Arrive On Green | 0.12 | 0.34 | 0.34 | 0.04 | 0.27 | 0.27 | 0.40 | 0.40 | 0.40 | 0.40 | 0.40 | 0.40 |
| Sat Flow, veh/h | 1681 | 2582 | 730 | 1681 | 4818 | 1500 | 1179 | 727 | 882 | 1285 | 223 | 1310 |
| Grp Volume(v), veh/h | 159 | 496 | 484 | 53 | 821 | 85 | 282 | 0 | 104 | 175 | 0 | 199 |
| Grp Sat Flow(s),veh/h/ln | 1681 | 1676 | 1636 | 1681 | 1606 | 1500 | 1179 | 0 | 1609 | 1285 | 0 | 1534 |
| Q Serve(g_s), s | 5.1 | 15.2 | 15.2 | 1.7 | 8.3 | 2.4 | 11.9 | 0.0 | 2.3 | 5.6 | 0.0 | 4.9 |
| Cycle Q Clear(g_c), s | 5.1 | 15.2 | 15.2 | 1.7 | 8.3 | 2.4 | 16.9 | 0.0 | 2.3 | 7.9 | 0.0 | 4.9 |
| Prop In Lane | 1.00 | | 0.45 | 1.00 | | 1.00 | 1.00 | | 0.55 | 1.00 | | 0.85 |
| Lane Grp Cap(c), veh/h | 198 | 574 | 560 | 68 | 1277 | 398 | 495 | 0 | 642 | 590 | 0 | 612 |
| V/C Ratio(X) | 0.80 | 0.86 | 0.86 | 0.78 | 0.64 | 0.21 | 0.57 | 0.00 | 0.16 | 0.30 | 0.00 | 0.33 |
| Avail Cap(c_a), veh/h | 244 | 610 | 595 | 122 | 1401 | 436 | 495 | 0 | 642 | 590 | 0 | 612 |
| HCM Platoon Ratio | 1.00 | 1.00 | 1.00 | 1.00 | 1.00 | 1.00 | 1.00 | 1.00 | 1.00 | 1.00 | 1.00 | 1.00 |
| Upstream Filter(I) | 0.82 | 0.82 | 0.82 | 0.80 | 0.80 | 0.80 | 1.00 | 0.00 | 1.00 | 1.00 | 0.00 | 1.00 |
| Uniform Delay (d), s/veh | 23.6 | 16.9 | 16.9 | 26.1 | 17.9 | 15.7 | 17.2 | 0.0 | 10.6 | 13.1 | 0.0 | 11.4 |
| Incr Delay (d2), s/veh | 12.1 | 9.9 | 10.1 | 14.4 | 0.7 | 0.2 | 4.7 | 0.0 | 0.5 | 1.3 | 0.0 | 1.4 |
| Initial Q Delay(d3),s/veh | 0.0 | 0.0 | 0.0 | 0.0 | 0.0 | 0.0 | 0.0 | 0.0 | 0.0 | 0.0 | 0.0 | 0.0 |
| %ile BackOfQ(50%),veh/ln | 3.0 | 8.5 | 8.3 | 1.1 | 3.7 | 1.0 | 4.5 | 0.0 | 1.1 | 2.2 | 0.0 | 2.3 |
| LnGrp Delay(d),s/veh | 35.7 | 26.8 | 27.0 | 40.5 | 18.6 | 16.0 | 21.9 | 0.0 | 11.2 | 14.4 | 0.0 | 12.8 |
| LnGrp LOS | D | C | C | D | B | B | C | | B | B | | B |
| Approach Vol, veh/h | | 1139 | | | 959 | | | 386 | | | 374 | |
| Approach Delay, s/veh | | 28.1 | | | 19.6 | | | 19.0 | | | 13.6 | |
| Approach LOS | | C | | | B | | | B | | | B | |

| Timer | 1 | 2 | 3 | 4 | 5 | 6 | 7 | 8 |
|---|---|---|---|---|---|---|---|---|
| Assigned Phs | | 2 | 3 | 4 | | 6 | 7 | 8 |
| Phs Duration (G+Y+Rc), s | | 25.9 | 6.2 | 22.8 | | 25.9 | 10.5 | 18.6 |
| Change Period (Y+Rc), s | | 4.0 | 4.0 | 4.0 | | 4.0 | 4.0 | 4.0 |
| Max Green Setting (Gmax), s | | 19.0 | 4.0 | 20.0 | | 19.0 | 8.0 | 16.0 |
| Max Q Clear Time (g_c+I1), s | | 18.9 | 3.7 | 17.2 | | 9.9 | 7.1 | 10.3 |
| Green Ext Time (p_c), s | | 0.0 | 0.0 | 1.6 | | 1.2 | 0.0 | 2.8 |

| Intersection Summary | |
|---|---|
| HCM 2010 Ctrl Delay | 22.1 |
| HCM 2010 LOS | C |

| Lane Group | EBT | WBL | WBT | SBL | SBT |
|---|---|---|---|---|---|
| Lane Group Flow (vph) | 388 | 257 | 215 | 867 | 820 |
| v/c Ratio | 0.72 | 0.99 | 0.18 | 0.99 | 0.95 |
| Control Delay | 43.5 | 93.4 | 19.7 | 50.9 | 40.1 |
| Queue Delay | 0.0 | 0.0 | 0.0 | 0.0 | 0.0 |
| Total Delay | 43.5 | 93.4 | 19.7 | 50.9 | 40.1 |
| Queue Length 50th (ft) | 109 | 148 | 42 | ~505 | 420 |
| Queue Length 95th (ft) | 157 | #301 | 66 | #793 | #721 |
| Internal Link Dist (ft) | 117 | | 320 | | 250 |
| Turn Bay Length (ft) | | 115 | | | |
| Base Capacity (vph) | 595 | 260 | 1266 | 875 | 866 |
| Starvation Cap Reductn | 0 | 0 | 0 | 0 | 0 |
| Spillback Cap Reductn | 0 | 0 | 0 | 0 | 0 |
| Storage Cap Reductn | 0 | 0 | 0 | 0 | 0 |
| Reduced v/c Ratio | 0.65 | 0.99 | 0.17 | 0.99 | 0.95 |

Intersection Summary

~ Volume exceeds capacity, queue is theoretically infinite.
Queue shown is maximum after two cycles.

# 95th percentile volume exceeds capacity, queue may be longer.
Queue shown is maximum after two cycles.

| Movement | EBL | EBT | EBR | WBL | WBT | WBR | NBL | NBT | NBR | SBL | SBT | SBR |
|---|---|---|---|---|---|---|---|---|---|---|---|---|
| Lane Configurations | | | | | | | | | | | | |
| Traffic Volume (veh/h) | 0 | 352 | 5 | 236 | 198 | 0 | 0 | 0 | 0 | 1227 | 10 | 315 |
| Future Volume (veh/h) | 0 | 352 | 5 | 236 | 198 | 0 | 0 | 0 | 0 | 1227 | 10 | 315 |
| Number | 7 | 4 | 14 | 3 | 8 | 18 | | | | 1 | 6 | 16 |
| Initial Q (Qb), veh | 0 | 0 | 0 | 0 | 0 | 0 | | | | 0 | 0 | 0 |
| Ped-Bike Adj(A_pbT) | 1.00 | | 1.00 | 1.00 | | 1.00 | | | | 1.00 | | 1.00 |
| Parking Bus, Adj | 1.00 | 1.00 | 1.00 | 1.00 | 1.00 | 1.00 | | | | 1.00 | 1.00 | 1.00 |
| Adj Sat Flow, veh/h/ln | 0 | 1765 | 1800 | 1765 | 1765 | 0 | | | | 1765 | 1765 | 1800 |
| Adj Flow Rate, veh/h | 0 | 383 | 5 | 257 | 215 | 0 | | | | 844 | 698 | 342 |
| Adj No. of Lanes | 0 | 2 | 0 | 1 | 2 | 0 | | | | 1 | 1 | 0 |
| Peak Hour Factor | 0.92 | 0.92 | 0.92 | 0.92 | 0.92 | 0.92 | | | | 0.92 | 0.92 | 0.92 |
| Percent Heavy Veh, % | 0 | 2 | 2 | 2 | 2 | 0 | | | | 2 | 2 | 2 |
| Cap, veh/h | 0 | 478 | 6 | 261 | 1144 | 0 | | | | 958 | 638 | 313 |
| Arrive On Green | 0.00 | 0.14 | 0.14 | 0.16 | 0.34 | 0.00 | | | | 0.57 | 0.57 | 0.57 |
| Sat Flow, veh/h | 0 | 3477 | 44 | 1681 | 3441 | 0 | | | | 1681 | 1119 | 548 |
| Grp Volume(v), veh/h | 0 | 189 | 199 | 257 | 215 | 0 | | | | 844 | 0 | 1040 |
| Grp Sat Flow(s),veh/h/ln | 0 | 1676 | 1757 | 1681 | 1676 | 0 | | | | 1681 | 0 | 1668 |
| Q Serve(g_s), s | 0.0 | 9.8 | 9.9 | 13.7 | 4.1 | 0.0 | | | | 39.0 | 0.0 | 51.3 |
| Cycle Q Clear(g_c), s | 0.0 | 9.8 | 9.9 | 13.7 | 4.1 | 0.0 | | | | 39.0 | 0.0 | 51.3 |
| Prop In Lane | 0.00 | | 0.03 | 1.00 | | 0.00 | | | | 1.00 | | 0.33 |
| Lane Grp Cap(c), veh/h | 0 | 237 | 248 | 261 | 1144 | 0 | | | | 958 | 0 | 951 |
| V/C Ratio(X) | 0.00 | 0.80 | 0.80 | 0.98 | 0.19 | 0.00 | | | | 0.88 | 0.00 | 1.09 |
| Avail Cap(c_a), veh/h | 0 | 298 | 312 | 261 | 1267 | 0 | | | | 958 | 0 | 951 |
| HCM Platoon Ratio | 1.00 | 1.00 | 1.00 | 1.00 | 1.00 | 1.00 | | | | 1.00 | 1.00 | 1.00 |
| Upstream Filter(I) | 0.00 | 1.00 | 1.00 | 0.95 | 0.95 | 0.00 | | | | 1.00 | 0.00 | 1.00 |
| Uniform Delay (d), s/veh | 0.0 | 37.4 | 37.4 | 37.9 | 20.9 | 0.0 | | | | 16.7 | 0.0 | 19.3 |
| Incr Delay (d2), s/veh | 0.0 | 11.6 | 11.2 | 49.5 | 0.1 | 0.0 | | | | 11.5 | 0.0 | 58.2 |
| Initial Q Delay(d3),s/veh | 0.0 | 0.0 | 0.0 | 0.0 | 0.0 | 0.0 | | | | 0.0 | 0.0 | 0.0 |
| %ile BackOfQ(50%),veh/ln | 0.0 | 5.3 | 5.6 | 9.9 | 1.9 | 0.0 | | | | 20.9 | 0.0 | 38.6 |
| LnGrp Delay(d),s/veh | 0.0 | 49.0 | 48.6 | 87.4 | 21.0 | 0.0 | | | | 28.2 | 0.0 | 77.6 |
| LnGrp LOS | | D | D | F | C | | | | | C | | F |
| Approach Vol, veh/h | | 388 | | | 472 | | | | | | 1884 | |
| Approach Delay, s/veh | | 48.8 | | | 57.1 | | | | | | 55.5 | |
| Approach LOS | | D | | | E | | | | | | E | |

| Timer | 1 | 2 | 3 | 4 | 5 | 6 | 7 | 8 |
|---|---|---|---|---|---|---|---|---|
| Assigned Phs | | | 3 | 4 | | 6 | | 8 |
| Phs Duration (G+Y+Rc), s | | | 18.0 | 16.7 | | 55.3 | | 34.7 |
| Change Period (Y+Rc), s | | | 4.0 | 4.0 | | 4.0 | | 4.0 |
| Max Green Setting (Gmax), s | | | 14.0 | 16.0 | | 48.0 | | 34.0 |
| Max Q Clear Time (g_c+I1), s | | | 15.7 | 11.9 | | 53.3 | | 6.1 |
| Green Ext Time (p_c), s | | | 0.0 | 0.8 | | 0.0 | | 1.4 |

| Intersection Summary | |
|---|---|
| HCM 2010 Ctrl Delay | 54.8 |
| HCM 2010 LOS | D |

Notes

User approved volume balancing among the lanes for turning movement.

| Lane Group | EBL | EBT | WBT | WBR | NBT | NBR |
|---|---|---|---|---|---|---|
| Lane Group Flow (vph) | 111 | 1597 | 458 | 879 | 194 | 197 |
| v/c Ratio | 0.49 | 0.81 | 0.33 | 0.59 | 0.42 | 0.43 |
| Control Delay | 31.6 | 13.8 | 13.4 | 1.7 | 13.3 | 13.5 |
| Queue Delay | 0.0 | 2.3 | 0.0 | 0.0 | 0.0 | 0.0 |
| Total Delay | 31.6 | 16.1 | 13.4 | 1.7 | 13.3 | 13.5 |
| Queue Length 50th (ft) | 37 | 201 | 60 | 0 | 30 | 31 |
| Queue Length 95th (ft) | 80 | 287 | 93 | 0 | 83 | 85 |
| Internal Link Dist (ft) | | 320 | 600 | | 228 | |
| Turn Bay Length (ft) | 160 | | | | | |
| Base Capacity (vph) | 251 | 2011 | 1400 | 1500 | 467 | 463 |
| Starvation Cap Reductn | 0 | 276 | 0 | 0 | 0 | 0 |
| Spillback Cap Reductn | 0 | 0 | 0 | 0 | 0 | 0 |
| Storage Cap Reductn | 0 | 0 | 0 | 0 | 0 | 0 |
| Reduced v/c Ratio | 0.44 | 0.92 | 0.33 | 0.59 | 0.42 | 0.43 |

Intersection Summary

| Movement | EBL | EBT | EBR | WBL | WBT | WBR | NBL | NBT | NBR | SBL | SBT | SBR |
|---|---|---|---|---|---|---|---|---|---|---|---|---|
| Lane Configurations | | | | | | | | | | | | |
| Traffic Volume (veh/h) | 102 | 1469 | 0 | 0 | 421 | 809 | 12 | 0 | 348 | 0 | 0 | 0 |
| Future Volume (veh/h) | 102 | 1469 | 0 | 0 | 421 | 809 | 12 | 0 | 348 | 0 | 0 | 0 |
| Number | 7 | 4 | 14 | 3 | 8 | 18 | 5 | 2 | 12 | | | |
| Initial Q (Qb), veh | 0 | 0 | 0 | 0 | 0 | 0 | 0 | 0 | 0 | | | |
| Ped-Bike Adj(A_pbT) | 1.00 | | 1.00 | 1.00 | | 1.00 | 1.00 | | 1.00 | | | |
| Parking Bus, Adj | 1.00 | 1.00 | 1.00 | 1.00 | 1.00 | 1.00 | 1.00 | 1.00 | 1.00 | | | |
| Adj Sat Flow, veh/h/ln | 1765 | 1765 | 1800 | 0 | 1765 | 1765 | 1800 | 1765 | 1765 | | | |
| Adj Flow Rate, veh/h | 111 | 1597 | 0 | 0 | 458 | 0 | 0 | 0 | 392 | | | |
| Adj No. of Lanes | 1 | 2 | 0 | 0 | 2 | 1 | 0 | 1 | 2 | | | |
| Peak Hour Factor | 0.92 | 0.92 | 0.92 | 0.92 | 0.92 | 0.92 | 0.92 | 0.92 | 0.92 | | | |
| Percent Heavy Veh, % | 2 | 2 | 2 | 0 | 2 | 2 | 2 | 2 | 2 | | | |
| Cap, veh/h | 141 | 1869 | 0 | 0 | 1365 | 611 | 0 | 546 | 928 | | | |
| Arrive On Green | 0.08 | 0.56 | 0.00 | 0.00 | 0.41 | 0.00 | 0.00 | 0.00 | 0.31 | | | |
| Sat Flow, veh/h | 1681 | 3441 | 0 | 0 | 3441 | 1500 | 0 | 1765 | 3000 | | | |
| Grp Volume(v), veh/h | 111 | 1597 | 0 | 0 | 458 | 0 | 0 | 0 | 392 | | | |
| Grp Sat Flow(s),veh/h/ln | 1681 | 1676 | 0 | 0 | 1676 | 1500 | 0 | 1765 | 1500 | | | |
| Q Serve(g_s), s | 3.9 | 24.2 | 0.0 | 0.0 | 5.6 | 0.0 | 0.0 | 0.0 | 6.2 | | | |
| Cycle Q Clear(g_c), s | 3.9 | 24.2 | 0.0 | 0.0 | 5.6 | 0.0 | 0.0 | 0.0 | 6.2 | | | |
| Prop In Lane | 1.00 | | 0.00 | 0.00 | | 1.00 | 0.00 | | 1.00 | | | |
| Lane Grp Cap(c), veh/h | 141 | 1869 | 0 | 0 | 1365 | 611 | 0 | 546 | 928 | | | |
| V/C Ratio(X) | 0.79 | 0.85 | 0.00 | 0.00 | 0.34 | 0.00 | 0.00 | 0.00 | 0.42 | | | |
| Avail Cap(c_a), veh/h | 252 | 2012 | 0 | 0 | 1365 | 611 | 0 | 546 | 928 | | | |
| HCM Platoon Ratio | 1.00 | 1.00 | 1.00 | 1.00 | 1.00 | 1.00 | 1.00 | 1.00 | 1.00 | | | |
| Upstream Filter(I) | 0.30 | 0.30 | 0.00 | 0.00 | 0.70 | 0.00 | 0.00 | 0.00 | 1.00 | | | |
| Uniform Delay (d), s/veh | 27.0 | 11.2 | 0.0 | 0.0 | 12.2 | 0.0 | 0.0 | 0.0 | 16.5 | | | |
| Incr Delay (d2), s/veh | 3.0 | 1.1 | 0.0 | 0.0 | 0.1 | 0.0 | 0.0 | 0.0 | 1.4 | | | |
| Initial Q Delay(d3),s/veh | 0.0 | 0.0 | 0.0 | 0.0 | 0.0 | 0.0 | 0.0 | 0.0 | 0.0 | | | |
| %ile BackOfQ(50%),veh/ln | 1.9 | 11.2 | 0.0 | 0.0 | 2.6 | 0.0 | 0.0 | 0.0 | 2.7 | | | |
| LnGrp Delay(d),s/veh | 30.0 | 12.4 | 0.0 | 0.0 | 12.3 | 0.0 | 0.0 | 0.0 | 17.9 | | | |
| LnGrp LOS | C | B | | | B | | | | B | | | |
| Approach Vol, veh/h | | 1708 | | | 458 | | | 392 | | | | |
| Approach Delay, s/veh | | 13.5 | | | 12.3 | | | 17.9 | | | | |
| Approach LOS | | B | | | B | | | B | | | | |

| Timer | 1 | 2 | 3 | 4 | 5 | 6 | 7 | 8 |
|---|---|---|---|---|---|---|---|---|
| Assigned Phs | | 2 | | 4 | | | 7 | 8 |
| Phs Duration (G+Y+Rc), s | | 22.6 | | 37.4 | | | 9.0 | 28.4 |
| Change Period (Y+Rc), s | | 4.0 | | 4.0 | | | 4.0 | 4.0 |
| Max Green Setting (Gmax), s | | 16.0 | | 36.0 | | | 9.0 | 23.0 |
| Max Q Clear Time (g_c+I1), s | | 8.2 | | 26.2 | | | 5.9 | 7.6 |
| Green Ext Time (p_c), s | | 1.0 | | 7.3 | | | 0.1 | 2.7 |

| Intersection Summary | |
|---|---|
| HCM 2010 Ctrl Delay | 14.0 |
| HCM 2010 LOS | B |

Notes

User approved volume balancing among the lanes for turning movement.

| Lane Group | EBL | EBT | WBL | WBT | WBR | NBL | NBT | SBL | SBT |
|---|---|---|---|---|---|---|---|---|---|
| Lane Group Flow (vph) | 178 | 1797 | 111 | 795 | 58 | 314 | 136 | 128 | 227 |
| v/c Ratio | 0.48 | 1.59 | 0.30 | 0.49 | 0.11 | 1.10 | 0.24 | 0.36 | 0.36 |
| Control Delay | 39.2 | 297.8 | 52.6 | 18.1 | 4.8 | 117.6 | 10.5 | 29.7 | 7.4 |
| Queue Delay | 0.0 | 0.0 | 0.0 | 0.0 | 0.0 | 0.0 | 0.0 | 0.0 | 0.0 |
| Total Delay | 39.2 | 297.8 | 52.6 | 18.1 | 4.8 | 117.6 | 10.5 | 29.7 | 7.4 |
| Queue Length 50th (ft) | 100 | ~867 | 77 | 62 | 1 | ~229 | 19 | 62 | 14 |
| Queue Length 95th (ft) | 167 | #1008 | 134 | 76 | m8 | #397 | 63 | 115 | 69 |
| Internal Link Dist (ft) | | 600 | | 925 | | | 1078 | | 400 |
| Turn Bay Length (ft) | 130 | | 300 | | 100 | 90 | | 90 | |
| Base Capacity (vph) | 368 | 1128 | 368 | 1638 | 546 | 285 | 569 | 359 | 624 |
| Starvation Cap Reductn | 0 | 0 | 0 | 0 | 0 | 0 | 0 | 0 | 0 |
| Spillback Cap Reductn | 0 | 0 | 0 | 0 | 0 | 0 | 0 | 0 | 0 |
| Storage Cap Reductn | 0 | 0 | 0 | 0 | 0 | 0 | 0 | 0 | 0 |
| Reduced v/c Ratio | 0.48 | 1.59 | 0.30 | 0.49 | 0.11 | 1.10 | 0.24 | 0.36 | 0.36 |

Intersection Summary

~ Volume exceeds capacity, queue is theoretically infinite.
Queue shown is maximum after two cycles.

# 95th percentile volume exceeds capacity, queue may be longer.
Queue shown is maximum after two cycles.

m Volume for 95th percentile queue is metered by upstream signal.

| Movement | EBL | EBT | EBR | WBL | WBT | WBR | NBL | NBT | NBR | SBL | SBT | SBR |
|---|---|---|---|---|---|---|---|---|---|---|---|---|
| Lane Configurations | | | | | | | | | | | | |
| Traffic Volume (veh/h) | 164 | 1330 | 323 | 102 | 731 | 53 | 289 | 40 | 86 | 118 | 29 | 179 |
| Future Volume (veh/h) | 164 | 1330 | 323 | 102 | 731 | 53 | 289 | 40 | 86 | 118 | 29 | 179 |
| Number | 7 | 4 | 14 | 3 | 8 | 18 | 5 | 2 | 12 | 1 | 6 | 16 |
| Initial Q (Qb), veh | 0 | 0 | 0 | 0 | 0 | 0 | 0 | 0 | 0 | 0 | 0 | 0 |
| Ped-Bike Adj(A_pbT) | 1.00 | | 1.00 | 1.00 | | 1.00 | 1.00 | | 1.00 | 1.00 | | 1.00 |
| Parking Bus, Adj | 1.00 | 1.00 | 1.00 | 1.00 | 1.00 | 1.00 | 1.00 | 1.00 | 1.00 | 1.00 | 1.00 | 1.00 |
| Adj Sat Flow, veh/h/ln | 1765 | 1765 | 1800 | 1765 | 1765 | 1765 | 1765 | 1765 | 1800 | 1765 | 1765 | 1800 |
| Adj Flow Rate, veh/h | 178 | 1446 | 351 | 111 | 795 | 58 | 314 | 43 | 93 | 128 | 32 | 195 |
| Adj No. of Lanes | 1 | 2 | 0 | 1 | 3 | 1 | 1 | 1 | 0 | 1 | 1 | 0 |
| Peak Hour Factor | 0.92 | 0.92 | 0.92 | 0.92 | 0.92 | 0.92 | 0.92 | 0.92 | 0.92 | 0.92 | 0.92 | 0.92 |
| Percent Heavy Veh, % | 2 | 2 | 2 | 2 | 2 | 2 | 2 | 2 | 2 | 2 | 2 | 2 |
| Cap, veh/h | 370 | 916 | 216 | 370 | 1638 | 510 | 304 | 159 | 345 | 391 | 69 | 421 |
| Arrive On Green | 0.22 | 0.34 | 0.34 | 0.22 | 0.34 | 0.34 | 0.32 | 0.32 | 0.32 | 0.32 | 0.32 | 0.32 |
| Sat Flow, veh/h | 1681 | 2694 | 635 | 1681 | 4818 | 1500 | 1149 | 498 | 1077 | 1248 | 216 | 1316 |
| Grp Volume(v), veh/h | 178 | 884 | 913 | 111 | 795 | 58 | 314 | 0 | 136 | 128 | 0 | 227 |
| Grp Sat Flow(s),veh/h/ln | 1681 | 1676 | 1653 | 1681 | 1606 | 1500 | 1149 | 0 | 1575 | 1248 | 0 | 1532 |
| Q Serve(g_s), s | 9.2 | 34.0 | 34.0 | 5.5 | 13.0 | 2.7 | 20.2 | 0.0 | 6.4 | 8.5 | 0.0 | 11.8 |
| Cycle Q Clear(g_c), s | 9.2 | 34.0 | 34.0 | 5.5 | 13.0 | 2.7 | 32.0 | 0.0 | 6.4 | 14.9 | 0.0 | 11.8 |
| Prop In Lane | 1.00 | | 0.38 | 1.00 | | 1.00 | 1.00 | | 0.68 | 1.00 | | 0.86 |
| Lane Grp Cap(c), veh/h | 370 | 570 | 562 | 370 | 1638 | 510 | 304 | 0 | 504 | 391 | 0 | 490 |
| V/C Ratio(X) | 0.48 | 1.55 | 1.62 | 0.30 | 0.49 | 0.11 | 1.03 | 0.00 | 0.27 | 0.33 | 0.00 | 0.46 |
| Avail Cap(c_a), veh/h | 370 | 570 | 562 | 370 | 1638 | 510 | 304 | 0 | 504 | 391 | 0 | 490 |
| HCM Platoon Ratio | 1.00 | 1.00 | 1.00 | 1.00 | 1.00 | 1.00 | 1.00 | 1.00 | 1.00 | 1.00 | 1.00 | 1.00 |
| Upstream Filter(I) | 1.00 | 1.00 | 1.00 | 1.00 | 1.00 | 1.00 | 1.00 | 0.00 | 1.00 | 1.00 | 0.00 | 1.00 |
| Uniform Delay (d), s/veh | 34.0 | 33.0 | 33.0 | 32.6 | 26.1 | 22.7 | 42.3 | 0.0 | 25.3 | 30.9 | 0.0 | 27.1 |
| Incr Delay (d2), s/veh | 4.4 | 256.5 | 289.3 | 2.1 | 1.0 | 0.5 | 60.6 | 0.0 | 1.3 | 2.2 | 0.0 | 3.1 |
| Initial Q Delay(d3),s/veh | 0.0 | 0.0 | 0.0 | 0.0 | 0.0 | 0.0 | 0.0 | 0.0 | 0.0 | 0.0 | 0.0 | 0.0 |
| %ile BackOfQ(50%),veh/ln | 4.8 | 56.3 | 60.6 | 2.8 | 5.9 | 1.2 | 13.5 | 0.0 | 3.0 | 3.2 | 0.0 | 5.4 |
| LnGrp Delay(d),s/veh | 38.5 | 289.5 | 322.3 | 34.6 | 27.1 | 23.1 | 102.9 | 0.0 | 26.6 | 33.1 | 0.0 | 30.3 |
| LnGrp LOS | D | F | F | C | C | C | F | | C | C | | C |
| Approach Vol, veh/h | | 1975 | | | 964 | | | 450 | | | 355 | |
| Approach Delay, s/veh | | 282.0 | | | 27.7 | | | 79.8 | | | 31.3 | |
| Approach LOS | | F | | | C | | | E | | | C | |

| Timer | 1 | 2 | 3 | 4 | 5 | 6 | 7 | 8 |
|---|---|---|---|---|---|---|---|---|
| Assigned Phs | | 2 | 3 | 4 | | 6 | 7 | 8 |
| Phs Duration (G+Y+Rc), s | | 36.0 | 26.0 | 38.0 | | 36.0 | 26.0 | 38.0 |
| Change Period (Y+Rc), s | | 4.0 | 4.0 | 4.0 | | 4.0 | 4.0 | 4.0 |
| Max Green Setting (Gmax), s | | 32.0 | 22.0 | 34.0 | | 32.0 | 22.0 | 34.0 |
| Max Q Clear Time (g_c+I1), s | | 34.0 | 7.5 | 36.0 | | 16.9 | 11.2 | 15.0 |
| Green Ext Time (p_c), s | | 0.0 | 0.2 | 0.0 | | 1.6 | 0.3 | 5.6 |

| Intersection Summary | |
|---|---|
| HCM 2010 Ctrl Delay | 168.5 |
| HCM 2010 LOS | F |

| Intersection | |
|---|---|
| Intersection Delay, s/veh | 5.2 |
| Intersection LOS | A |

| Approach | EB | WB | SB |
|---|---|---|---|
| Entry Lanes | 1 | 1 | 1 |
| Conflicting Circle Lanes | 1 | 1 | 1 |
| Adj Approach Flow, veh/h | 99 | 231 | 177 |
| Demand Flow Rate, veh/h | 101 | 236 | 180 |
| Vehicles Circulating, veh/h | 158 | 15 | 133 |
| Vehicles Exiting, veh/h | 155 | 244 | 118 |
| Follow-Up Headway, s | 3.186 | 3.186 | 3.186 |
| Ped Vol Crossing Leg, #/h | 0 | 0 | 0 |
| Ped Cap Adj | 1.000 | 1.000 | 1.000 |
| Approach Delay, s/veh | 4.8 | 5.2 | 5.4 |
| Approach LOS | A | A | A |

| Lane | Left | Left | Left |
|---|---|---|---|
| Designated Moves | LT | TR | LR |
| Assumed Moves | LT | TR | LR |
| RT Channelized | | | |
| Lane Util | 1.000 | 1.000 | 1.000 |
| Critical Headway, s | 5.193 | 5.193 | 5.193 |
| Entry Flow, veh/h | 101 | 236 | 180 |
| Cap Entry Lane, veh/h | 965 | 1113 | 989 |
| Entry HV Adj Factor | 0.983 | 0.980 | 0.983 |
| Flow Entry, veh/h | 99 | 231 | 177 |
| Cap Entry, veh/h | 949 | 1091 | 973 |
| V/C Ratio | 0.105 | 0.212 | 0.182 |
| Control Delay, s/veh | 4.8 | 5.2 | 5.4 |
| LOS | A | A | A |
| 95th %tile Queue, veh | 0 | 1 | 1 |

| Intersection | |
|---|---|
| Int Delay, s/veh | 1.4 |

| Movement | EBT | EBR | WBL | WBT | NBL | NBR |
|---|---|---|---|---|---|---|
| Lane Configurations | | | | | | |
| Traffic Vol, veh/h | 1186 | 19 | 95 | 910 | 3 | 30 |
| Future Vol, veh/h | 1186 | 19 | 95 | 910 | 3 | 30 |
| Conflicting Peds, #/hr | 0 | 0 | 0 | 0 | 0 | 0 |
| Sign Control | Free | Free | Free | Free | Stop | Stop |
| RT Channelized | - | None | - | None | - | None |
| Storage Length | - | - | 90 | - | 0 | - |
| Veh in Median Storage, # | 0 | - | - | 0 | 0 | - |
| Grade, % | 0 | - | - | 0 | 0 | - |
| Peak Hour Factor | 92 | 92 | 92 | 92 | 92 | 92 |
| Heavy Vehicles, % | 2 | 2 | 2 | 2 | 2 | 2 |
| Mvmt Flow | 1289 | 21 | 103 | 989 | 3 | 33 |

| Major/Minor | Major1 | | Major2 | | Minor1 | |
|---|---|---|---|---|---|---|
| Conflicting Flow All | 0 | 0 | 1310 | 0 | 1902 | 655 |
| Stage 1 | - | - | - | - | 1300 | - |
| Stage 2 | - | - | - | - | 602 | - |
| Critical Hdwy | - | - | 5.34 | - | 5.74 | 7.14 |
| Critical Hdwy Stg 1 | - | - | - | - | 6.64 | - |
| Critical Hdwy Stg 2 | - | - | - | - | 6.04 | - |
| Follow-up Hdwy | - | - | 3.12 | - | 3.82 | 3.92 |
| Pot Cap-1 Maneuver | - | - | 277 | - | 106 | 350 |
| Stage 1 | - | - | - | - | 158 | - |
| Stage 2 | - | - | - | - | 464 | - |
| Platoon blocked, % | - | - | | - | | |
| Mov Cap-1 Maneuver | - | - | 277 | - | 67 | 350 |
| Mov Cap-2 Maneuver | - | - | - | - | 67 | - |
| Stage 1 | - | - | - | - | 99 | - |
| Stage 2 | - | - | - | - | 464 | - |

| Approach | EB | WB | NB |
|---|---|---|---|
| HCM Control Delay, s | 0 | 2.4 | 21.6 |
| HCM LOS | | | C |

| Minor Lane/Major Mvmt | NBLn1 | EBT | EBR | WBL | WBT |
|---|---|---|---|---|---|
| Capacity (veh/h) | 253 | - | - | 277 | - |
| HCM Lane V/C Ratio | 0.142 | - | - | 0.373 | - |
| HCM Control Delay (s) | 21.6 | - | - | 25.5 | - |
| HCM Lane LOS | C | - | - | D | - |
| HCM 95th %tile Q(veh) | 0.5 | - | - | 1.7 | - |

| Lane Group | EBL | EBT | WBL | WBT | NBL | NBT | SBL | SBT |
|---|---|---|---|---|---|---|---|---|
| Lane Group Flow (vph) | 15 | 1620 | 198 | 713 | 258 | 176 | 11 | 50 |
| v/c Ratio | 0.06 | 1.24 | 0.79 | 0.55 | 0.53 | 0.22 | 0.04 | 0.11 |
| Control Delay | 29.4 | 153.9 | 64.0 | 33.1 | 43.7 | 4.0 | 27.5 | 17.7 |
| Queue Delay | 0.0 | 0.0 | 0.0 | 0.0 | 0.0 | 0.0 | 0.0 | 0.0 |
| Total Delay | 29.4 | 153.9 | 64.0 | 33.1 | 43.7 | 4.0 | 27.5 | 17.7 |
| Queue Length 50th (ft) | 10 | ~478 | 123 | 142 | 79 | 5 | 5 | 12 |
| Queue Length 95th (ft) | m9 | m272 | #237 | 183 | 119 | 42 | 19 | 41 |
| Internal Link Dist (ft) | | 925 | | 1050 | | 211 | | 222 |
| Turn Bay Length (ft) | 90 | | 100 | | | | | |
| Base Capacity (vph) | 251 | 1307 | 251 | 1300 | 487 | 787 | 307 | 459 |
| Starvation Cap Reductn | 0 | 0 | 0 | 0 | 0 | 0 | 0 | 0 |
| Spillback Cap Reductn | 0 | 0 | 0 | 0 | 0 | 0 | 0 | 0 |
| Storage Cap Reductn | 0 | 0 | 0 | 0 | 0 | 0 | 0 | 0 |
| Reduced v/c Ratio | 0.06 | 1.24 | 0.79 | 0.55 | 0.53 | 0.22 | 0.04 | 0.11 |

Intersection Summary

~ Volume exceeds capacity, queue is theoretically infinite.
Queue shown is maximum after two cycles.

# 95th percentile volume exceeds capacity, queue may be longer.
Queue shown is maximum after two cycles.

m Volume for 95th percentile queue is metered by upstream signal.

# HCM 2010 Signalized Intersection Summary
## 150: Yucaipa Blvd & Knollhaven Lane

01/09/2019

| Movement | EBL | EBT | EBR | WBL | WBT | WBR | NBL | NBT | NBR | SBL | SBT | SBR |
|---|---|---|---|---|---|---|---|---|---|---|---|---|
| Lane Configurations | | | | | | | | | | | | |
| Traffic Volume (veh/h) | 14 | 1175 | 316 | 182 | 653 | 3 | 237 | 14 | 148 | 10 | 24 | 22 |
| Future Volume (veh/h) | 14 | 1175 | 316 | 182 | 653 | 3 | 237 | 14 | 148 | 10 | 24 | 22 |
| Number | 7 | 4 | 14 | 3 | 8 | 18 | 5 | 2 | 12 | 1 | 6 | 16 |
| Initial Q (Qb), veh | 0 | 0 | 0 | 0 | 0 | 0 | 0 | 0 | 0 | 0 | 0 | 0 |
| Ped-Bike Adj(A_pbT) | 1.00 | | 1.00 | 1.00 | | 1.00 | 1.00 | | 1.00 | 1.00 | | 1.00 |
| Parking Bus, Adj | 1.00 | 1.00 | 1.00 | 1.00 | 1.00 | 1.00 | 1.00 | 1.00 | 1.00 | 1.00 | 1.00 | 1.00 |
| Adj Sat Flow, veh/h/ln | 1765 | 1765 | 1800 | 1765 | 1765 | 1800 | 1765 | 1765 | 1800 | 1765 | 1765 | 1800 |
| Adj Flow Rate, veh/h | 15 | 1277 | 343 | 198 | 710 | 3 | 258 | 15 | 161 | 11 | 26 | 24 |
| Adj No. of Lanes | 1 | 3 | 0 | 1 | 3 | 0 | 2 | 1 | 0 | 1 | 1 | 0 |
| Peak Hour Factor | 0.92 | 0.92 | 0.92 | 0.92 | 0.92 | 0.92 | 0.92 | 0.92 | 0.92 | 0.92 | 0.92 | 0.92 |
| Percent Heavy Veh, % | 2 | 2 | 2 | 2 | 2 | 2 | 2 | 2 | 2 | 2 | 2 | 2 |
| Cap, veh/h | 24 | 1261 | 338 | 224 | 2240 | 9 | 304 | 48 | 519 | 369 | 192 | 177 |
| Arrive On Green | 0.01 | 0.33 | 0.33 | 0.13 | 0.45 | 0.45 | 0.09 | 0.37 | 0.37 | 0.23 | 0.23 | 0.23 |
| Sat Flow, veh/h | 1681 | 3782 | 1015 | 1681 | 4952 | 21 | 3261 | 129 | 1390 | 1204 | 846 | 781 |
| Grp Volume(v), veh/h | 15 | 1084 | 536 | 198 | 460 | 253 | 258 | 0 | 176 | 11 | 0 | 50 |
| Grp Sat Flow(s),veh/h/ln | 1681 | 1606 | 1586 | 1681 | 1606 | 1761 | 1630 | 0 | 1519 | 1204 | 0 | 1627 |
| Q Serve(g_s), s | 0.7 | 25.0 | 25.0 | 8.7 | 6.9 | 6.9 | 5.8 | 0.0 | 6.2 | 0.5 | 0.0 | 1.8 |
| Cycle Q Clear(g_c), s | 0.7 | 25.0 | 25.0 | 8.7 | 6.9 | 6.9 | 5.8 | 0.0 | 6.2 | 0.5 | 0.0 | 1.8 |
| Prop In Lane | 1.00 | | 0.64 | 1.00 | | 0.01 | 1.00 | | 0.91 | 1.00 | | 0.48 |
| Lane Grp Cap(c), veh/h | 24 | 1071 | 529 | 224 | 1453 | 797 | 304 | 0 | 567 | 369 | 0 | 369 |
| V/C Ratio(X) | 0.62 | 1.01 | 1.01 | 0.88 | 0.32 | 0.32 | 0.85 | 0.00 | 0.31 | 0.03 | 0.00 | 0.14 |
| Avail Cap(c_a), veh/h | 90 | 1071 | 529 | 224 | 1453 | 797 | 304 | 0 | 567 | 369 | 0 | 369 |
| HCM Platoon Ratio | 1.00 | 1.00 | 1.00 | 1.00 | 1.00 | 1.00 | 1.00 | 1.00 | 1.00 | 1.00 | 1.00 | 1.00 |
| Upstream Filter(I) | 0.09 | 0.09 | 0.09 | 1.00 | 1.00 | 1.00 | 1.00 | 0.00 | 1.00 | 1.00 | 0.00 | 1.00 |
| Uniform Delay (d), s/veh | 36.8 | 25.0 | 25.0 | 31.9 | 13.1 | 13.1 | 33.5 | 0.0 | 16.7 | 22.6 | 0.0 | 23.1 |
| Incr Delay (d2), s/veh | 2.4 | 11.6 | 15.4 | 31.2 | 0.1 | 0.2 | 19.5 | 0.0 | 1.4 | 0.1 | 0.0 | 0.8 |
| Initial Q Delay(d3),s/veh | 0.0 | 0.0 | 0.0 | 0.0 | 0.0 | 0.0 | 0.0 | 0.0 | 0.0 | 0.0 | 0.0 | 0.0 |
| %ile BackOfQ(50%),veh/ln | 0.3 | 12.7 | 13.1 | 6.0 | 3.0 | 3.3 | 3.4 | 0.0 | 2.8 | 0.2 | 0.0 | 0.9 |
| LnGrp Delay(d),s/veh | 39.1 | 36.6 | 40.4 | 63.2 | 13.3 | 13.4 | 53.0 | 0.0 | 18.1 | 22.8 | 0.0 | 23.9 |
| LnGrp LOS | D | F | F | E | B | B | D | | B | C | | C |
| Approach Vol, veh/h | | 1635 | | | 911 | | | 434 | | | 61 | |
| Approach Delay, s/veh | | 37.9 | | | 24.1 | | | 38.8 | | | 23.7 | |
| Approach LOS | | D | | | C | | | D | | | C | |

| Timer | 1 | 2 | 3 | 4 | 5 | 6 | 7 | 8 |
|---|---|---|---|---|---|---|---|---|
| Assigned Phs | | 2 | 3 | 4 | 5 | 6 | 7 | 8 |
| Phs Duration (G+Y+Rc), s | | 32.0 | 14.0 | 29.0 | 11.0 | 21.0 | 5.1 | 37.9 |
| Change Period (Y+Rc), s | | 4.0 | 4.0 | 4.0 | 4.0 | 4.0 | 4.0 | 4.0 |
| Max Green Setting (Gmax), s | | 28.0 | 10.0 | 25.0 | 7.0 | 17.0 | 4.0 | 31.0 |
| Max Q Clear Time (g_c+I1), s | | 8.2 | 10.7 | 27.0 | 7.8 | 3.8 | 2.7 | 8.9 |
| Green Ext Time (p_c), s | | 1.0 | 0.0 | 0.0 | 0.0 | 0.2 | 0.0 | 4.7 |

| Intersection Summary | |
|---|---|
| HCM 2010 Ctrl Delay | 33.6 |
| HCM 2010 LOS | C |

# Appendix C: Freeway Mainline Analysis

# BASIC FREEWAY SEGMENTS WORKSHEET

| General Information | | Site Information | |
|---|---|---|---|
| Analyst | *Oliver Gaskell* | Highway/Direction of Travel | *I10 EB* |
| Agency or Company | *IBI Group* | From/To | *Wabash/Yucaipa* |
| Date Performed | *12/17/2018* | Jurisdiction | *Caltrans* |
| Analysis Time Period | *Existing Conditions* | Analysis Year | *2018* |

Project Description *Yucaipa Pointe Traffic Impact Analysis*

☑ Oper.(LOS) ☐ Des.(N) ☑ Planning Data

## Flow Inputs

| | | | | | |
|---|---|---|---|---|---|
| Volume, V | *5596* | veh/h | Peak-Hour Factor, PHF | *0.94* | |
| AADT | *123000* | veh/day | %Trucks and Buses, $P_T$ | *14* | |
| Peak-Hr Prop. of AADT, K | *0.07* | | %RVs, $P_R$ | *0* | |
| Peak-Hr Direction Prop, D | *65* | | General Terrain: | *Level* | |
| DDHV = AADT x K x D | *5596* | veh/h | Grade % Length Up/Down % | *mi* | |

## Calculate Flow Adjustments

| | | | |
|---|---|---|---|
| $f_p$ | *1.00* | $E_R$ | *1.2* |
| $E_T$ | *1.5* | $f_{HV} = 1/[1+P_T(E_T - 1) + P_R(E_R - 1)]$ | *0.935* |

## Speed Inputs

| | | |
|---|---|---|
| Lane Width | | ft |
| Rt-Side Lat. Clearance | | ft |
| Number of Lanes, N | *5* | |
| Total Ramp Density, TRD | | ramps/mi |
| FFS (measured) | *70.0* | mph |
| Base free-flow Speed, BFFS | | mph |

## Calc Speed Adj and FFS

| | | |
|---|---|---|
| $f_{LW}$ | | mph |
| $f_{LC}$ | | mph |
| TRD Adjustment | | mph |
| FFS | *70.0* | mph |

## LOS and Performance Measures

Operational (LOS)

| | | |
|---|---|---|
| $v_p$ = (V or DDHV) / (PHF x N x $f_{HV}$ x $f_p$) | *1274* | pc/h/ln |
| S | *69.9* | mph |
| D = $v_p$ / S | *18.2* | pc/mi/ln |
| LOS | *C* | |

## Design (N)

Design (N)

| | | |
|---|---|---|
| Design LOS | | |
| $v_p$ = (V or DDHV) / (PHF x N x $f_{HV}$ x $f_p$) | | pc/h/ln |
| S | | mph |
| D = $v_p$ / S | | pc/mi/ln |
| Required Number of Lanes, N | | |

## Glossary

N - Number of lanes
V - Hourly volume
$v_p$ - Flow rate
LOS - Level of service
S - Speed
D - Density
FFS - Free-flow speed
BFFS - Base free-flow speed
DDHV - Directional design hour volume

## Factor Location

$E_R$ - Exhibits 11-10, 11-12
$E_T$ - Exhibits 11-10, 11-11, 11-13
$f_p$ - Page 11-18
LOS, S, FFS, $v_p$ - Exhibits 11-2, 11-3
$f_{LW}$ - Exhibit 11-8
$f_{LC}$ - Exhibit 11-9
TRD - Page 11-11

Copyright © 2010 University of Florida, All Rights Reserved *HCS 2010*™ Version 6.1 Generated: 12/20/2018 10:38 AM

# BASIC FREEWAY SEGMENTS WORKSHEET

## General Information

| | |
|---|---|
| Analyst | *Oliver Gaskell* |
| Agency or Company | *IBI Group* |
| Date Performed | *12/17/2018* |
| Analysis Time Period | *Existing Conditions* |

## Site Information

| | |
|---|---|
| Highway/Direction of Travel | *I10 WB* |
| From/To | *Yucaipa/Live Oak* |
| Jurisdiction | *Caltrans* |
| Analysis Year | *2018* |

Project Description *Yucaipa Pointe Traffic Impact Analysis*

☑ Oper.(LOS) ☐ Des.(N) ☑ Planning Data

## Flow Inputs

| | | | | |
|---|---|---|---|---|
| Volume, V | *6870* | veh/h | Peak-Hour Factor, PHF | *0.94* |
| AADT | *151000* | veh/day | %Trucks and Buses, $P_T$ | *14* |
| Peak-Hr Prop. of AADT, K | *0.07* | | %RVs, $P_R$ | *0* |
| Peak-Hr Direction Prop, D | *65* | | General Terrain: | *Level* |
| DDHV = AADT x K x D | *6870* | veh/h | Grade % Length | *mi* |
| | | | Up/Down % | |

## Calculate Flow Adjustments

| | | | |
|---|---|---|---|
| $f_p$ | *1.00* | $E_R$ | *1.2* |
| $E_T$ | *1.5* | $f_{HV} = 1/[1+P_T(E_T - 1) + P_R(E_R - 1)]$ | *0.935* |

## Speed Inputs

| | | |
|---|---|---|
| Lane Width | | ft |
| Rt-Side Lat. Clearance | | ft |
| Number of Lanes, N | *5* | |
| Total Ramp Density, TRD | | ramps/mi |
| FFS (measured) | *70.0* | mph |
| Base free-flow Speed, BFFS | | mph |

## Calc Speed Adj and FFS

| | | |
|---|---|---|
| $f_{LW}$ | | mph |
| $f_{LC}$ | | mph |
| TRD Adjustment | | mph |
| FFS | *70.0* | mph |

## LOS and Performance Measures

Operational (LOS)

| | | |
|---|---|---|
| $v_p$ = (V or DDHV) / (PHF x N x $f_{HV}$ x $f_p$) | *1564* | pc/h/ln |
| S | *68.5* | mph |
| D = $v_p$ / S | *22.8* | pc/mi/ln |
| LOS | *C* | |

## Design (N)

Design (N)

| | |
|---|---|
| Design LOS | |
| $v_p$ = (V or DDHV) / (PHF x N x $f_{HV}$ x $f_p$) | pc/h/ln |
| S | mph |
| D = $v_p$ / S | pc/mi/ln |
| Required Number of Lanes, N | |

## Glossary

N - Number of lanes
V - Hourly volume
$v_p$ - Flow rate
LOS - Level of service
S - Speed
D - Density
FFS - Free-flow speed
BFFS - Base free-flow speed
DDHV - Directional design hour volume

## Factor Location

$E_R$ - Exhibits 11-10, 11-12
$E_T$ - Exhibits 11-10, 11-11, 11-13
$f_p$ - Page 11-18
LOS, S, FFS, $v_p$ - Exhibits 11-2, 11-3
$f_{LW}$ - Exhibit 11-8
$f_{LC}$ - Exhibit 11-9
TRD - Page 11-11

Copyright © 2010 University of Florida, All Rights Reserved *HCS 2010*™ Version 6.1 Generated: 12/20/2018 10:39 AM

# BASIC FREEWAY SEGMENTS WORKSHEET

| General Information | | Site Information | |
|---|---|---|---|
| Analyst | *Oliver Gaskell* | Highway/Direction of Travel | *I10 EB* |
| Agency or Company | *IBI Group* | From/To | *Wabash/Yucaipa* |
| Date Performed | *12/17/2018* | Jurisdiction | *Caltrans* |
| Analysis Time Period | *Future No Project* | Analysis Year | *2020* |

Project Description *Yucaipa Pointe Traffic Impact Analysis*

☑ Oper.(LOS) ☐ Des.(N) ☑ Planning Data

## Flow Inputs

| | | | | |
|---|---|---|---|---|
| Volume, V | *5764* | veh/h | Peak-Hour Factor, PHF | *0.94* |
| AADT | *126690* | veh/day | %Trucks and Buses, $P_T$ | *14* |
| Peak-Hr Prop. of AADT, K | *0.07* | | %RVs, $P_R$ | *0* |
| Peak-Hr Direction Prop, D | *65* | | General Terrain: | *Level* |
| DDHV = AADT x K x D | *5764* | veh/h | Grade % Length | *mi* |
| | | | Up/Down % | |

## Calculate Flow Adjustments

| | | | |
|---|---|---|---|
| $f_p$ | *1.00* | $E_R$ | *1.2* |
| $E_T$ | *1.5* | $f_{HV} = 1/[1+P_T(E_T - 1) + P_R(E_R - 1)]$ | *0.935* |

## Speed Inputs

| | | |
|---|---|---|
| Lane Width | | ft |
| Rt-Side Lat. Clearance | | ft |
| Number of Lanes, N | *5* | |
| Total Ramp Density, TRD | | ramps/mi |
| FFS (measured) | *70.0* | mph |
| Base free-flow Speed, BFFS | | mph |

## Calc Speed Adj and FFS

| | | |
|---|---|---|
| $f_{LW}$ | | mph |
| $f_{LC}$ | | mph |
| TRD Adjustment | | mph |
| FFS | *70.0* | mph |

## LOS and Performance Measures

Operational (LOS)

| | | |
|---|---|---|
| $v_p$ = (V or DDHV) / (PHF x N x $f_{HV}$ x $f_p$) | *1312* | pc/h/ln |
| S | *69.9* | mph |
| D = $v_p$ / S | *18.8* | pc/mi/ln |
| LOS | *C* | |

## Design (N)

Design (N)

| | | |
|---|---|---|
| Design LOS | | |
| $v_p$ = (V or DDHV) / (PHF x N x $f_{HV}$ x $f_p$) | | pc/h/ln |
| S | | mph |
| D = $v_p$ / S | | pc/mi/ln |
| Required Number of Lanes, N | | |

## Glossary

N - Number of lanes
V - Hourly volume
$v_p$ - Flow rate
LOS - Level of service
S - Speed
D - Density
FFS - Free-flow speed
BFFS - Base free-flow speed
DDHV - Directional design hour volume

## Factor Location

$E_R$ - Exhibits 11-10, 11-12
$E_T$ - Exhibits 11-10, 11-11, 11-13
$f_p$ - Page 11-18
LOS, S, FFS, $v_p$ - Exhibits 11-2, 11-3
$f_{LW}$ - Exhibit 11-8
$f_{LC}$ - Exhibit 11-9
TRD - Page 11-11

Copyright © 2010 University of Florida, All Rights Reserved *HCS 2010*™ Version 6.1 Generated: 12/20/2018 10:40 AM

# BASIC FREEWAY SEGMENTS WORKSHEET

| General Information | | Site Information | |
|---|---|---|---|
| Analyst | *Oliver Gaskell* | Highway/Direction of Travel | *I10 WB* |
| Agency or Company | *IBI Group* | From/To | *Yucaipa/Live Oak* |
| Date Performed | *12/17/2018* | Jurisdiction | *Caltrans* |
| Analysis Time Period | *Future No Project* | Analysis Year | *2020* |

Project Description *Yucaipa Pointe Traffic Impact Analysis*

☑ Oper.(LOS) ☐ Des.(N) ☑ Planning Data

## Flow Inputs

| | | | | |
|---|---|---|---|---|
| Volume, V | *7077* | veh/h | Peak-Hour Factor, PHF | *0.94* |
| AADT | *155530* | veh/day | %Trucks and Buses, $P_T$ | *14* |
| Peak-Hr Prop. of AADT, K | *0.07* | | %RVs, $P_R$ | *0* |
| Peak-Hr Direction Prop, D | *65* | | General Terrain: | *Level* |
| DDHV = AADT x K x D | *7077* | veh/h | Grade % Length | *mi* |
| | | | Up/Down % | |

## Calculate Flow Adjustments

| | | | |
|---|---|---|---|
| $f_p$ | *1.00* | $E_R$ | *1.2* |
| $E_T$ | *1.5* | $f_{HV} = 1/[1+P_T(E_T - 1) + P_R(E_R - 1)]$ | *0.935* |

## Speed Inputs

| | | |
|---|---|---|
| Lane Width | | ft |
| Rt-Side Lat. Clearance | | ft |
| Number of Lanes, N | *5* | |
| Total Ramp Density, TRD | | ramps/mi |
| FFS (measured) | *70.0* | mph |
| Base free-flow Speed, BFFS | | mph |

## Calc Speed Adj and FFS

| | | |
|---|---|---|
| $f_{LW}$ | | mph |
| $f_{LC}$ | | mph |
| TRD Adjustment | | mph |
| FFS | *70.0* | mph |

## LOS and Performance Measures

Operational (LOS)

| | | |
|---|---|---|
| $v_p$ = (V or DDHV) / (PHF x N x $f_{HV}$ x $f_p$) | *1611* | pc/h/ln |
| S | *68.0* | mph |
| D = $v_p$ / S | *23.7* | pc/mi/ln |
| LOS | *C* | |

## Design (N)

Design (N)

| | | |
|---|---|---|
| Design LOS | | |
| $v_p$ = (V or DDHV) / (PHF x N x $f_{HV}$ x $f_p$) | | pc/h/ln |
| S | | mph |
| D = $v_p$ / S | | pc/mi/ln |
| Required Number of Lanes, N | | |

## Glossary

N - Number of lanes
V - Hourly volume
$v_p$ - Flow rate
LOS - Level of service
S - Speed
D - Density
FFS - Free-flow speed
BFFS - Base free-flow speed
DDHV - Directional design hour volume

## Factor Location

$E_R$ - Exhibits 11-10, 11-12
$E_T$ - Exhibits 11-10, 11-11, 11-13
$f_p$ - Page 11-18
LOS, S, FFS, $v_p$ - Exhibits 11-2, 11-3
$f_{LW}$ - Exhibit 11-8
$f_{LC}$ - Exhibit 11-9
TRD - Page 11-11

Copyright © 2010 University of Florida, All Rights Reserved *HCS 2010*™ Version 6.1 Generated: 12/20/2018 10:40 AM

# BASIC FREEWAY SEGMENTS WORKSHEET

| General Information | | Site Information | |
|---|---|---|---|
| Analyst | *Oliver Gaskell* | Highway/Direction of Travel | *I10 EB* |
| Agency or Company | *IBI Group* | From/To | *Wabash/Yucaipa* |
| Date Performed | *12/17/2018* | Jurisdiction | *Caltrans* |
| Analysis Time Period | *Existing With Project* | Analysis Year | *2018* |

Project Description *Yucaipa Pointe Traffic Impact Analysis*

☑ Oper.(LOS) ☐ Des.(N) ☑ Planning Data

## Flow Inputs

| | | | | |
|---|---|---|---|---|
| Volume, V | *5707* | veh/h | Peak-Hour Factor, PHF | *0.94* |
| AADT | *125424* | veh/day | %Trucks and Buses, $P_T$ | *14* |
| Peak-Hr Prop. of AADT, K | *0.07* | | %RVs, $P_R$ | *0* |
| Peak-Hr Direction Prop, D | *65* | | General Terrain: | *Level* |
| DDHV = AADT x K x D | *5707* | veh/h | Grade % Length | *mi* |
| | | | Up/Down % | |

## Calculate Flow Adjustments

| | | | |
|---|---|---|---|
| $f_p$ | *1.00* | $E_R$ | *1.2* |
| $E_T$ | *1.5* | $f_{HV} = 1/[1+P_T(E_T - 1) + P_R(E_R - 1)]$ | *0.935* |

## Speed Inputs

| | | |
|---|---|---|
| Lane Width | | ft |
| Rt-Side Lat. Clearance | | ft |
| Number of Lanes, N | *5* | |
| Total Ramp Density, TRD | | ramps/mi |
| FFS (measured) | *70.0* | mph |
| Base free-flow Speed, BFFS | | mph |

## Calc Speed Adj and FFS

| | | |
|---|---|---|
| $f_{LW}$ | | mph |
| $f_{LC}$ | | mph |
| TRD Adjustment | | mph |
| FFS | *70.0* | mph |

## LOS and Performance Measures

Operational (LOS)

| | | |
|---|---|---|
| $v_p$ = (V or DDHV) / (PHF x N x $f_{HV}$ x $f_p$) | *1299* | pc/h/ln |
| S | *69.9* | mph |
| D = $v_p$ / S | *18.6* | pc/mi/ln |
| LOS | *C* | |

## Design (N)

Design (N)

| | | |
|---|---|---|
| Design LOS | | |
| $v_p$ = (V or DDHV) / (PHF x N x $f_{HV}$ x $f_p$) | | pc/h/ln |
| S | | mph |
| D = $v_p$ / S | | pc/mi/ln |
| Required Number of Lanes, N | | |

## Glossary

N - Number of lanes
V - Hourly volume
$v_p$ - Flow rate
LOS - Level of service
S - Speed
D - Density
FFS - Free-flow speed
BFFS - Base free-flow speed
DDHV - Directional design hour volume

## Factor Location

$E_R$ - Exhibits 11-10, 11-12
$E_T$ - Exhibits 11-10, 11-11, 11-13
$f_p$ - Page 11-18
LOS, S, FFS, $v_p$ - Exhibits 11-2, 11-3
$f_{LW}$ - Exhibit 11-8
$f_{LC}$ - Exhibit 11-9
TRD - Page 11-11

Copyright © 2010 University of Florida, All Rights Reserved *HCS 2010*™ Version 6.1 Generated: 12/20/2018 10:41 AM

# BASIC FREEWAY SEGMENTS WORKSHEET

| General Information | | Site Information | |
|---|---|---|---|
| Analyst | *Oliver Gaskell* | Highway/Direction of Travel | *I10 WB* |
| Agency or Company | *IBI Group* | From/To | *Yucaipa/Live Oak* |
| Date Performed | *12/17/2018* | Jurisdiction | *Caltrans* |
| Analysis Time Period | *Existing With Project* | Analysis Year | *2018* |

Project Description *Yucaipa Pointe Traffic Impact Analysis*

☑ Oper.(LOS) ☐ Des.(N) ☑ Planning Data

## Flow Inputs

| | | | | |
|---|---|---|---|---|
| Volume, V | *7091* | veh/h | Peak-Hour Factor, PHF | *0.94* |
| AADT | *155848* | veh/day | %Trucks and Buses, $P_T$ | *14* |
| Peak-Hr Prop. of AADT, K | *0.07* | | %RVs, $P_R$ | *0* |
| Peak-Hr Direction Prop, D | *65* | | General Terrain: | *Level* |
| DDHV = AADT x K x D | *7091* | veh/h | Grade % Length | *mi* |
| | | | Up/Down % | |

## Calculate Flow Adjustments

| | | | |
|---|---|---|---|
| $f_p$ | *1.00* | $E_R$ | *1.2* |
| $E_T$ | *1.5* | $f_{HV} = 1/[1+P_T(E_T - 1) + P_R(E_R - 1)]$ | *0.935* |

## Speed Inputs

| | | |
|---|---|---|
| Lane Width | | ft |
| Rt-Side Lat. Clearance | | ft |
| Number of Lanes, N | *5* | |
| Total Ramp Density, TRD | | ramps/mi |
| FFS (measured) | *70.0* | mph |
| Base free-flow Speed, BFFS | | mph |

## Calc Speed Adj and FFS

| | | |
|---|---|---|
| $f_{LW}$ | | mph |
| $f_{LC}$ | | mph |
| TRD Adjustment | | mph |
| FFS | *70.0* | mph |

## LOS and Performance Measures

Operational (LOS)

| | | |
|---|---|---|
| $v_p$ = (V or DDHV) / (PHF x N x $f_{HV}$ x $f_p$) | *1614* | pc/h/ln |
| S | *68.0* | mph |
| D = $v_p$ / S | *23.7* | pc/mi/ln |
| LOS | *C* | |

## Design (N)

Design (N)

| | | |
|---|---|---|
| Design LOS | | |
| $v_p$ = (V or DDHV) / (PHF x N x $f_{HV}$ x $f_p$) | | pc/h/ln |
| S | | mph |
| D = $v_p$ / S | | pc/mi/ln |
| Required Number of Lanes, N | | |

## Glossary

N - Number of lanes
V - Hourly volume
$v_p$ - Flow rate
LOS - Level of service
S - Speed
D - Density
FFS - Free-flow speed
BFFS - Base free-flow speed
DDHV - Directional design hour volume

## Factor Location

$E_R$ - Exhibits 11-10, 11-12
$E_T$ - Exhibits 11-10, 11-11, 11-13
$f_p$ - Page 11-18
LOS, S, FFS, $v_p$ - Exhibits 11-2, 11-3
$f_{LW}$ - Exhibit 11-8
$f_{LC}$ - Exhibit 11-9
TRD - Page 11-11

Copyright © 2010 University of Florida, All Rights Reserved *HCS 2010*™ Version 6.1 Generated: 12/20/2018 10:41 AM

# BASIC FREEWAY SEGMENTS WORKSHEET

| General Information | | Site Information | |
|---|---|---|---|
| Analyst | *Oliver Gaskell* | Highway/Direction of Travel | *I10 EB* |
| Agency or Company | *IBI Group* | From/To | *Wabash/Yucaipa* |
| Date Performed | *12/17/2018* | Jurisdiction | *Caltrans* |
| Analysis Time Period | *Future With Project* | Analysis Year | *2020* |

Project Description *Yucaipa Pointe Traffic Impact Analysis*

☑ Oper.(LOS) ☐ Des.(N) ☑ Planning Data

## Flow Inputs

| | | | | |
|---|---|---|---|---|
| Volume, V | *5875* | veh/h | Peak-Hour Factor, PHF | *0.94* |
| AADT | *129114* | veh/day | %Trucks and Buses, $P_T$ | *14* |
| Peak-Hr Prop. of AADT, K | *0.07* | | %RVs, $P_R$ | *0* |
| Peak-Hr Direction Prop, D | *65* | | General Terrain: | *Level* |
| DDHV = AADT x K x D | *5875* | veh/h | Grade % Length | *mi* |
| | | | Up/Down % | |

## Calculate Flow Adjustments

| | | | |
|---|---|---|---|
| $f_p$ | *1.00* | $E_R$ | *1.2* |
| $E_T$ | *1.5* | $f_{HV} = 1/[1+P_T(E_T - 1) + P_R(E_R - 1)]$ | *0.935* |

## Speed Inputs

| | | |
|---|---|---|
| Lane Width | | ft |
| Rt-Side Lat. Clearance | | ft |
| Number of Lanes, N | *5* | |
| Total Ramp Density, TRD | | ramps/mi |
| FFS (measured) | *70.0* | mph |
| Base free-flow Speed, BFFS | | mph |

## Calc Speed Adj and FFS

| | | |
|---|---|---|
| $f_{LW}$ | | mph |
| $f_{LC}$ | | mph |
| TRD Adjustment | | mph |
| FFS | *70.0* | mph |

## LOS and Performance Measures

Operational (LOS)

| | | |
|---|---|---|
| $v_p$ = (V or DDHV) / (PHF x N x $f_{HV}$ x $f_p$) | *1338* | pc/h/ln |
| S | *69.8* | mph |
| D = $v_p$ / S | *19.2* | pc/mi/ln |
| LOS | *C* | |

## Design (N)

Design (N)

| | | |
|---|---|---|
| Design LOS | | |
| $v_p$ = (V or DDHV) / (PHF x N x $f_{HV}$ x $f_p$) | | pc/h/ln |
| S | | mph |
| D = $v_p$ / S | | pc/mi/ln |
| Required Number of Lanes, N | | |

## Glossary

N - Number of lanes
V - Hourly volume
$v_p$ - Flow rate
LOS - Level of service
S - Speed
D - Density
FFS - Free-flow speed
BFFS - Base free-flow speed
DDHV - Directional design hour volume

## Factor Location

$E_R$ - Exhibits 11-10, 11-12
$E_T$ - Exhibits 11-10, 11-11, 11-13
$f_p$ - Page 11-18
LOS, S, FFS, $v_p$ - Exhibits 11-2, 11-3
$f_{LW}$ - Exhibit 11-8
$f_{LC}$ - Exhibit 11-9
TRD - Page 11-11

Copyright © 2010 University of Florida, All Rights Reserved *HCS 2010*™ Version 6.1 Generated: 12/20/2018 10:42 AM

# BASIC FREEWAY SEGMENTS WORKSHEET

| General Information | | Site Information | |
|---|---|---|---|
| Analyst | *Oliver Gaskell* | Highway/Direction of Travel | *I10 WB* |
| Agency or Company | *IBI Group* | From/To | *Yucaipa/Live Oak* |
| Date Performed | *12/17/2018* | Jurisdiction | *Caltrans* |
| Analysis Time Period | *Future With Project* | Analysis Year | *2020* |

Project Description *Yucaipa Pointe Traffic Impact Analysis*

☑ Oper.(LOS) ☐ Des.(N) ☑ Planning Data

## Flow Inputs

| | | | | |
|---|---|---|---|---|
| Volume, V | *7297* | veh/h | Peak-Hour Factor, PHF | *0.94* |
| AADT | *160378* | veh/day | %Trucks and Buses, $P_T$ | *14* |
| Peak-Hr Prop. of AADT, K | *0.07* | | %RVs, $P_R$ | *0* |
| Peak-Hr Direction Prop, D | *65* | | General Terrain: | *Level* |
| DDHV = AADT x K x D | *7297* | veh/h | Grade % Length | *mi* |
| | | | Up/Down % | |

## Calculate Flow Adjustments

| | | | |
|---|---|---|---|
| $f_p$ | *1.00* | $E_R$ | *1.2* |
| $E_T$ | *1.5* | $f_{HV} = 1/[1+P_T(E_T - 1) + P_R(E_R - 1)]$ | *0.935* |

## Speed Inputs

| | | |
|---|---|---|
| Lane Width | | ft |
| Rt-Side Lat. Clearance | | ft |
| Number of Lanes, N | *5* | |
| Total Ramp Density, TRD | | ramps/mi |
| FFS (measured) | *70.0* | mph |
| Base free-flow Speed, BFFS | | mph |

## Calc Speed Adj and FFS

| | | |
|---|---|---|
| $f_{LW}$ | | mph |
| $f_{LC}$ | | mph |
| TRD Adjustment | | mph |
| FFS | *70.0* | mph |

## LOS and Performance Measures

Operational (LOS)

| | | |
|---|---|---|
| $v_p$ = (V or DDHV) / (PHF x N x $f_{HV}$ x $f_p$) | *1661* | pc/h/ln |
| S | *67.5* | mph |
| D = $v_p$ / S | *24.6* | pc/mi/ln |
| LOS | *C* | |

## Design (N)

Design (N)

| | | |
|---|---|---|
| Design LOS | | |
| $v_p$ = (V or DDHV) / (PHF x N x $f_{HV}$ x $f_p$) | | pc/h/ln |
| S | | mph |
| D = $v_p$ / S | | pc/mi/ln |
| Required Number of Lanes, N | | |

## Glossary

N - Number of lanes
V - Hourly volume
$v_p$ - Flow rate
LOS - Level of service
S - Speed
D - Density
FFS - Free-flow speed
BFFS - Base free-flow speed
DDHV - Directional design hour volume

## Factor Location

$E_R$ - Exhibits 11-10, 11-12
$E_T$ - Exhibits 11-10, 11-11, 11-13
$f_p$ - Page 11-18
LOS, S, FFS, $v_p$ - Exhibits 11-2, 11-3
$f_{LW}$ - Exhibit 11-8
$f_{LC}$ - Exhibit 11-9
TRD - Page 11-11

Copyright © 2010 University of Florida, All Rights Reserved *HCS 2010*™ Version 6.1 Generated: 12/20/2018 10:42 AM

# Appendix D: LOS Worksheets for Driveways

# TWO-WAY STOP CONTROL SUMMARY

| General Information | | Site Information | |
|---|---|---|---|
| Analyst | *Oliver Gaskell* | Intersection | *A1* |
| Agency/Co. | *IBI Group* | Jurisdiction | *City of Yucaipa* |
| Date Performed | *12/18/2018* | Analysis Year | *2018* |
| Analysis Time Period | *Ex + Proj AM* | | |

Project Description *Yucaipa Pointe Traffic Impact Analysis Study*

East/West Street: *Yucaipa* | North/South Street: *Driveway A1*

Intersection Orientation: *East-West* | Study Period (hrs): *0.25*

## Vehicle Volumes and Adjustments

| Major Street | Eastbound | | | Westbound | | |
|---|---|---|---|---|---|---|
| Movement | 1 | 2 | 3 | 4 | 5 | 6 |
| | L | T | R | L | T | R |
| Volume (veh/h) | | *822* | *75* | | *900* | |
| Peak-Hour Factor, PHF | *1.00* | *1.00* | *1.00* | *1.00* | *1.00* | *1.00* |
| Hourly Flow Rate, HFR (veh/h) | *0* | *822* | *75* | *0* | *900* | *0* |
| Percent Heavy Vehicles | *0* | -- | -- | *0* | -- | -- |
| Median Type | *Undivided* | | | | | |
| RT Channelized | | | *0* | | | *0* |
| Lanes | *0* | *2* | *1* | *0* | *2* | *0* |
| Configuration | | *T* | *R* | | *T* | |
| Upstream Signal | | *0* | | | *0* | |

| Minor Street | Northbound | | | Southbound | | |
|---|---|---|---|---|---|---|
| Movement | 7 | 8 | 9 | 10 | 11 | 12 |
| | L | T | R | L | T | R |
| Volume (veh/h) | | | *5* | | | |
| Peak-Hour Factor, PHF | *1.00* | *1.00* | *1.00* | *1.00* | *1.00* | *1.00* |
| Hourly Flow Rate, HFR (veh/h) | *0* | *0* | *5* | *0* | *0* | *0* |
| Percent Heavy Vehicles | *0* | *0* | *0* | *0* | *0* | *0* |
| Percent Grade (%) | *0* | | | *0* | | |
| Flared Approach | | *N* | | | *N* | |
| Storage | | *0* | | | *0* | |
| RT Channelized | | | *0* | | | *0* |
| Lanes | *0* | *0* | *1* | *0* | *0* | *0* |
| Configuration | | | *R* | | | |

## Delay, Queue Length, and Level of Service

| Approach | Eastbound | Westbound | Northbound | | | Southbound | | |
|---|---|---|---|---|---|---|---|---|
| Movement | 1 | 4 | 7 | 8 | 9 | 10 | 11 | 12 |
| Lane Configuration | | | | | *R* | | | |
| v (veh/h) | | | | | *5* | | | |
| C (m) (veh/h) | | | | | *645* | | | |
| v/c | | | | | *0.01* | | | |
| 95% queue length | | | | | *0.02* | | | |
| Control Delay (s/veh) | | | | | *10.6* | | | |
| LOS | | | | | *B* | | | |
| Approach Delay (s/veh) | -- | -- | *10.6* | | | | | |
| Approach LOS | -- | -- | *B* | | | | | |

Copyright © 2010 University of Florida, All Rights Reserved *HCS+*™ Version 5.6 Generated: 12/18/2018 12:36 PM

# TWO-WAY STOP CONTROL SUMMARY

| General Information | | Site Information | |
|---|---|---|---|
| Analyst | *Oliver Gaskell* | Intersection | *A1* |
| Agency/Co. | *IBI Group* | Jurisdiction | *City of Yucaipa* |
| Date Performed | *12/18/2018* | Analysis Year | *2018* |
| Analysis Time Period | *Ex + Proj PM* | | |

Project Description *Yucaipa Pointe Traffic Impact Analysis Study*

East/West Street: *Yucaipa* | North/South Street: *Driveway A1*

Intersection Orientation: *East-West* | Study Period (hrs): *0.25*

## Vehicle Volumes and Adjustments

| Major Street | Eastbound | | | Westbound | | |
|---|---|---|---|---|---|---|
| Movement | 1 | 2 | 3 | 4 | 5 | 6 |
| | L | T | R | L | T | R |
| Volume (veh/h) | | *1430* | *61* | | *887* | |
| Peak-Hour Factor, PHF | *1.00* | *1.00* | *1.00* | *1.00* | *1.00* | *1.00* |
| Hourly Flow Rate, HFR (veh/h) | *0* | *1430* | *61* | *0* | *887* | *0* |
| Percent Heavy Vehicles | *0* | -- | -- | *0* | -- | -- |
| Median Type | *Undivided* | | | | | |
| RT Channelized | | | *0* | | | *0* |
| Lanes | *0* | *2* | *1* | *0* | *2* | *0* |
| Configuration | | *T* | *R* | | *T* | |
| Upstream Signal | | *0* | | | *0* | |

| Minor Street | Northbound | | | Southbound | | |
|---|---|---|---|---|---|---|
| Movement | 7 | 8 | 9 | 10 | 11 | 12 |
| | L | T | R | L | T | R |
| Volume (veh/h) | | | *5* | | | |
| Peak-Hour Factor, PHF | *1.00* | *1.00* | *1.00* | *1.00* | *1.00* | *1.00* |
| Hourly Flow Rate, HFR (veh/h) | *0* | *0* | *5* | *0* | *0* | *0* |
| Percent Heavy Vehicles | *0* | *0* | *0* | *0* | *0* | *0* |
| Percent Grade (%) | *0* | | | *0* | | |
| Flared Approach | | *N* | | | *N* | |
| Storage | | *0* | | | *0* | |
| RT Channelized | | | *0* | | | *0* |
| Lanes | *0* | *0* | *1* | *0* | *0* | *0* |
| Configuration | | | *R* | | | |

## Delay, Queue Length, and Level of Service

| Approach | Eastbound | Westbound | Northbound | | | Southbound | | |
|---|---|---|---|---|---|---|---|---|
| Movement | 1 | 4 | 7 | 8 | 9 | 10 | 11 | 12 |
| Lane Configuration | | | | | *R* | | | |
| v (veh/h) | | | | | *5* | | | |
| C (m) (veh/h) | | | | | *434* | | | |
| v/c | | | | | *0.01* | | | |
| 95% queue length | | | | | *0.03* | | | |
| Control Delay (s/veh) | | | | | *13.4* | | | |
| LOS | | | | | *B* | | | |
| Approach Delay (s/veh) | -- | -- | *13.4* | | | | | |
| Approach LOS | -- | -- | *B* | | | | | |

Copyright © 2010 University of Florida, All Rights Reserved *HCS+*™ Version 5.6 Generated: 12/18/2018 12:37 PM

# TWO-WAY STOP CONTROL SUMMARY

| General Information | | Site Information | |
|---|---|---|---|
| Analyst | *Oliver Gaskell* | Intersection | *A2* |
| Agency/Co. | *IBI Group* | Jurisdiction | *City of Yucaipa* |
| Date Performed | *12/18/2018* | Analysis Year | *2018* |
| Analysis Time Period | *Ex + Proj AM* | | |

Project Description *Yucaipa Pointe Traffic Impact Analysis Study*

East/West Street: *Driveway A2* North/South Street: *18th Street*

Intersection Orientation: *North-South* Study Period (hrs): *0.25*

## Vehicle Volumes and Adjustments

| Major Street | Northbound | | | Southbound | | |
|---|---|---|---|---|---|---|
| Movement | 1 | 2 | 3 | 4 | 5 | 6 |
| | L | T | R | L | T | R |
| Volume (veh/h) | *37* | *6* | | | *7* | *26* |
| Peak-Hour Factor, PHF | *1.00* | *1.00* | *1.00* | *1.00* | *1.00* | *1.00* |
| Hourly Flow Rate, HFR (veh/h) | *37* | *6* | *0* | *0* | *7* | *26* |
| Percent Heavy Vehicles | *0* | -- | -- | *0* | -- | -- |
| Median Type | *Undivided* | | | | | |
| RT Channelized | | | *0* | | | *0* |
| Lanes | *0* | *1* | *0* | *0* | *1* | *0* |
| Configuration | *LT* | | | | | *TR* |
| Upstream Signal | | *0* | | | *0* | |

| Minor Street | Eastbound | | | Westbound | | |
|---|---|---|---|---|---|---|
| Movement | 7 | 8 | 9 | 10 | 11 | 12 |
| | L | T | R | L | T | R |
| Volume (veh/h) | *24* | *0* | *34* | | | |
| Peak-Hour Factor, PHF | *1.00* | *1.00* | *1.00* | *1.00* | *1.00* | *1.00* |
| Hourly Flow Rate, HFR (veh/h) | *24* | *0* | *34* | *0* | *0* | *0* |
| Percent Heavy Vehicles | *0* | *0* | *0* | *0* | *0* | *0* |
| Percent Grade (%) | | *0* | | | *0* | |
| Flared Approach | | *N* | | | *N* | |
| Storage | | *0* | | | *0* | |
| RT Channelized | | | *0* | | | *0* |
| Lanes | *0* | *1* | *0* | *0* | *0* | *0* |
| Configuration | | *LTR* | | | | |

## Delay, Queue Length, and Level of Service

| Approach | Northbound | Southbound | Westbound | | | Eastbound | | |
|---|---|---|---|---|---|---|---|---|
| Movement | 1 | 4 | 7 | 8 | 9 | 10 | 11 | 12 |
| Lane Configuration | *LT* | | | | | | *LTR* | |
| v (veh/h) | *37* | | | | | | *58* | |
| C (m) (veh/h) | *1592* | | | | | | *981* | |
| v/c | *0.02* | | | | | | *0.06* | |
| 95% queue length | *0.07* | | | | | | *0.19* | |
| Control Delay (s/veh) | *7.3* | | | | | | *8.9* | |
| LOS | *A* | | | | | | *A* | |
| Approach Delay (s/veh) | -- | -- | | | | *8.9* | | |
| Approach LOS | -- | -- | | | | *A* | | |

Copyright © 2010 University of Florida, All Rights Reserved *HCS+*™ Version 5.6 Generated: 12/18/2018 12:37 PM

# TWO-WAY STOP CONTROL SUMMARY

| General Information | | Site Information | |
|---|---|---|---|
| Analyst | *Oliver Gaskell* | Intersection | *A2* |
| Agency/Co. | *IBI Group* | Jurisdiction | *City of Yucaipa* |
| Date Performed | *12/18/2018* | Analysis Year | *2018* |
| Analysis Time Period | *Ex+Proj PM* | | |

Project Description *Yucaipa Pointe Traffic Impact Analysis Study*

East/West Street: *Driveway A2* North/South Street: *18th Street*

Intersection Orientation: *North-South* Study Period (hrs): *0.25*

## Vehicle Volumes and Adjustments

| Major Street | Northbound | | | Southbound | | |
|---|---|---|---|---|---|---|
| Movement | 1 | 2 | 3 | 4 | 5 | 6 |
| | L | T | R | L | T | R |
| Volume (veh/h) | *64* | *4* | | | *16* | *98* |
| Peak-Hour Factor, PHF | *1.00* | *1.00* | *1.00* | *1.00* | *1.00* | *1.00* |
| Hourly Flow Rate, HFR (veh/h) | *64* | *4* | *0* | *0* | *16* | *98* |
| Percent Heavy Vehicles | *0* | -- | -- | *0* | -- | -- |
| Median Type | *Undivided* | | | | | |
| RT Channelized | | | *0* | | | *0* |
| Lanes | *0* | *1* | *0* | *0* | *1* | *0* |
| Configuration | *LT* | | | | | *TR* |
| Upstream Signal | | *0* | | | *0* | |

| Minor Street | Eastbound | | | Westbound | | |
|---|---|---|---|---|---|---|
| Movement | 7 | 8 | 9 | 10 | 11 | 12 |
| | L | T | R | L | T | R |
| Volume (veh/h) | *26* | *0* | *35* | | | |
| Peak-Hour Factor, PHF | *1.00* | *1.00* | *1.00* | *1.00* | *1.00* | *1.00* |
| Hourly Flow Rate, HFR (veh/h) | *26* | *0* | *35* | *0* | *0* | *0* |
| Percent Heavy Vehicles | *0* | *0* | *0* | *0* | *0* | *0* |
| Percent Grade (%) | | *0* | | | *0* | |
| Flared Approach | | *N* | | | *N* | |
| Storage | | *0* | | | *0* | |
| RT Channelized | | | *0* | | | *0* |
| Lanes | *0* | *1* | *0* | *0* | *0* | *0* |
| Configuration | | *LTR* | | | | |

## Delay, Queue Length, and Level of Service

| Approach | Northbound | Southbound | Westbound | | | Eastbound | | |
|---|---|---|---|---|---|---|---|---|
| Movement | 1 | 4 | 7 | 8 | 9 | 10 | 11 | 12 |
| Lane Configuration | *LT* | | | | | | *LTR* | |
| v (veh/h) | *64* | | | | | | *61* | |
| C (m) (veh/h) | *1488* | | | | | | *885* | |
| v/c | *0.04* | | | | | | *0.07* | |
| 95% queue length | *0.13* | | | | | | *0.22* | |
| Control Delay (s/veh) | *7.5* | | | | | | *9.4* | |
| LOS | *A* | | | | | | *A* | |
| Approach Delay (s/veh) | -- | -- | | | | *9.4* | | |
| Approach LOS | -- | -- | | | | *A* | | |

Copyright © 2010 University of Florida, All Rights Reserved *HCS+*™ Version 5.6 Generated: 12/18/2018 12:38 PM

# TWO-WAY STOP CONTROL SUMMARY

| General Information | | Site Information | |
|---|---|---|---|
| Analyst | *Oliver Gaskell* | Intersection | *A3* |
| Agency/Co. | *IBI Group* | Jurisdiction | *City of Yucaipa* |
| Date Performed | *12/18/2018* | Analysis Year | *2018* |
| Analysis Time Period | *Ex + Proj AM* | | |

Project Description *Yucaipa Pointe Traffic Impact Analysis Study*

East/West Street: *Driveway A3* North/South Street: *18th Street*

Intersection Orientation: *North-South* Study Period (hrs): *0.25*

## Vehicle Volumes and Adjustments

| Major Street | Northbound | | | Southbound | | |
|---|---|---|---|---|---|---|
| Movement | 1 | 2 | 3 | 4 | 5 | 6 |
| | L | T | R | L | T | R |
| Volume (veh/h) | 9 | 42 | | | 39 | 0 |
| Peak-Hour Factor, PHF | 1.00 | 1.00 | 1.00 | 1.00 | 1.00 | 1.00 |
| Hourly Flow Rate, HFR (veh/h) | 9 | 42 | 0 | 0 | 39 | 0 |
| Percent Heavy Vehicles | 0 | -- | -- | 0 | -- | -- |
| Median Type | Undivided | | | | | |
| RT Channelized | | | 0 | | | 0 |
| Lanes | 0 | 1 | 0 | 0 | 1 | 0 |
| Configuration | LT | | | | | TR |
| Upstream Signal | | 0 | | | 0 | |

| Minor Street | Eastbound | | | Westbound | | |
|---|---|---|---|---|---|---|
| Movement | 7 | 8 | 9 | 10 | 11 | 12 |
| | L | T | R | L | T | R |
| Volume (veh/h) | 1 | 0 | 8 | | | |
| Peak-Hour Factor, PHF | 1.00 | 1.00 | 1.00 | 1.00 | 1.00 | 1.00 |
| Hourly Flow Rate, HFR (veh/h) | 1 | 0 | 8 | 0 | 0 | 0 |
| Percent Heavy Vehicles | 0 | 0 | 0 | 0 | 0 | 0 |
| Percent Grade (%) | 0 | | | 0 | | |
| Flared Approach | | N | | | N | |
| Storage | | 0 | | | 0 | |
| RT Channelized | | | 0 | | | 0 |
| Lanes | 0 | 1 | 0 | 0 | 0 | 0 |
| Configuration | | LTR | | | | |

## Delay, Queue Length, and Level of Service

| Approach | Northbound | Southbound | Westbound | | | Eastbound | | |
|---|---|---|---|---|---|---|---|---|
| Movement | 1 | 4 | 7 | 8 | 9 | 10 | 11 | 12 |
| Lane Configuration | LT | | | | | | LTR | |
| v (veh/h) | 9 | | | | | | 9 | |
| C (m) (veh/h) | 1584 | | | | | | 1021 | |
| v/c | 0.01 | | | | | | 0.01 | |
| 95% queue length | 0.02 | | | | | | 0.03 | |
| Control Delay (s/veh) | 7.3 | | | | | | 8.6 | |
| LOS | A | | | | | | A | |
| Approach Delay (s/veh) | -- | -- | 8.6 | | | | | |
| Approach LOS | -- | -- | A | | | | | |

Copyright © 2010 University of Florida, All Rights Reserved *HCS+*™ Version 5.6 Generated: 12/18/2018 12:38 PM

# TWO-WAY STOP CONTROL SUMMARY

| General Information | | Site Information | |
|---|---|---|---|
| Analyst | *Oliver Gaskell* | Intersection | *A3* |
| Agency/Co. | *IBI Group* | Jurisdiction | *City of Yucaipa* |
| Date Performed | *12/18/2018* | Analysis Year | *2018* |
| Analysis Time Period | *Ex + Proj PM* | | |

Project Description *Yucaipa Pointe Traffic Impact Analysis Study*

East/West Street: *Driveway A3* North/South Street: *18th Street*

Intersection Orientation: *North-South* Study Period (hrs): *0.25*

## Vehicle Volumes and Adjustments

| Major Street | Northbound | | | Southbound | | |
|---|---|---|---|---|---|---|
| Movement | 1 | 2 | 3 | 4 | 5 | 6 |
| | L | T | R | L | T | R |
| Volume (veh/h) | *21* | *68* | | | *42* | *9* |
| Peak-Hour Factor, PHF | *1.00* | *1.00* | *1.00* | *1.00* | *1.00* | *1.00* |
| Hourly Flow Rate, HFR (veh/h) | *21* | *68* | *0* | *0* | *42* | *9* |
| Percent Heavy Vehicles | *0* | -- | -- | *0* | -- | -- |
| Median Type | *Undivided* | | | | | |
| RT Channelized | | | *0* | | | *0* |
| Lanes | *0* | *1* | *0* | *0* | *1* | *0* |
| Configuration | *LT* | | | | | *TR* |
| Upstream Signal | | *0* | | | *0* | |

| Minor Street | Eastbound | | | Westbound | | |
|---|---|---|---|---|---|---|
| Movement | 7 | 8 | 9 | 10 | 11 | 12 |
| | L | T | R | L | T | R |
| Volume (veh/h) | *1* | *0* | *9* | | | |
| Peak-Hour Factor, PHF | *1.00* | *1.00* | *1.00* | *1.00* | *1.00* | *1.00* |
| Hourly Flow Rate, HFR (veh/h) | *1* | *0* | *9* | *0* | *0* | *0* |
| Percent Heavy Vehicles | *0* | *0* | *0* | *0* | *0* | *0* |
| Percent Grade (%) | | *0* | | | *0* | |
| Flared Approach | | *N* | | | *N* | |
| Storage | | *0* | | | *0* | |
| RT Channelized | | | *0* | | | *0* |
| Lanes | *0* | *1* | *0* | *0* | *0* | *0* |
| Configuration | | *LTR* | | | | |

## Delay, Queue Length, and Level of Service

| Approach | Northbound | Southbound | Westbound | | | Eastbound | | |
|---|---|---|---|---|---|---|---|---|
| Movement | 1 | 4 | 7 | 8 | 9 | 10 | 11 | 12 |
| Lane Configuration | *LT* | | | | | | *LTR* | |
| v (veh/h) | *21* | | | | | | *10* | |
| C (m) (veh/h) | *1568* | | | | | | *1005* | |
| v/c | *0.01* | | | | | | *0.01* | |
| 95% queue length | *0.04* | | | | | | *0.03* | |
| Control Delay (s/veh) | *7.3* | | | | | | *8.6* | |
| LOS | *A* | | | | | | *A* | |
| Approach Delay (s/veh) | -- | -- | | | | *8.6* | | |
| Approach LOS | -- | -- | | | | *A* | | |

Copyright © 2010 University of Florida, All Rights Reserved *HCS+*™ Version 5.6 Generated: 12/18/2018 12:39 PM

# TWO-WAY STOP CONTROL SUMMARY

| General Information | | Site Information | |
|---|---|---|---|
| Analyst | *Oliver Gaskell* | Intersection | *A4* |
| Agency/Co. | *IBI Group* | Jurisdiction | *City of Yucaipa* |
| Date Performed | *12/18/2018* | Analysis Year | *2018* |
| Analysis Time Period | *Ex + Proj AM* | | |

Project Description *Yucaipa Pointe Traffic Impact Analysis Study*

East/West Street: *Driveway A4* North/South Street: *Avenue E*

Intersection Orientation: *North-South* Study Period (hrs): *0.25*

## Vehicle Volumes and Adjustments

| Major Street | Northbound | | | Southbound | | |
|---|---|---|---|---|---|---|
| Movement | 1 | 2 | 3 | 4 | 5 | 6 |
| | L | T | R | L | T | R |
| Volume (veh/h) | | *112* | *11* | *5* | *171* | |
| Peak-Hour Factor, PHF | *1.00* | *1.00* | *1.00* | *1.00* | *1.00* | *1.00* |
| Hourly Flow Rate, HFR (veh/h) | *0* | *112* | *11* | *5* | *171* | *0* |
| Percent Heavy Vehicles | *0* | -- | -- | *0* | -- | -- |
| Median Type | *Undivided* | | | | | |
| RT Channelized | | | *0* | | | *0* |
| Lanes | *0* | *1* | *0* | *0* | *1* | *0* |
| Configuration | | | *TR* | *LT* | | |
| Upstream Signal | | *0* | | | *0* | |

| Minor Street | Eastbound | | | Westbound | | |
|---|---|---|---|---|---|---|
| Movement | 7 | 8 | 9 | 10 | 11 | 12 |
| | L | T | R | L | T | R |
| Volume (veh/h) | | | | *11* | *0* | *6* |
| Peak-Hour Factor, PHF | *1.00* | *1.00* | *1.00* | *1.00* | *1.00* | *1.00* |
| Hourly Flow Rate, HFR (veh/h) | *0* | *0* | *0* | *11* | *0* | *6* |
| Percent Heavy Vehicles | *0* | *0* | *0* | *0* | *0* | *0* |
| Percent Grade (%) | | *0* | | | *0* | |
| Flared Approach | | *N* | | | *N* | |
| Storage | | *0* | | | *0* | |
| RT Channelized | | | *0* | | | *0* |
| Lanes | *0* | *0* | *0* | *0* | *1* | *0* |
| Configuration | | | | | *LTR* | |

## Delay, Queue Length, and Level of Service

| Approach | Northbound | Southbound | Westbound | | | Eastbound | | |
|---|---|---|---|---|---|---|---|---|
| Movement | 1 | 4 | 7 | 8 | 9 | 10 | 11 | 12 |
| Lane Configuration | | *LT* | | *LTR* | | | | |
| v (veh/h) | | *5* | | *17* | | | | |
| C (m) (veh/h) | | *1477* | | *765* | | | | |
| v/c | | *0.00* | | *0.02* | | | | |
| 95% queue length | | *0.01* | | *0.07* | | | | |
| Control Delay (s/veh) | | *7.4* | | *9.8* | | | | |
| LOS | | *A* | | *A* | | | | |
| Approach Delay (s/veh) | -- | -- | *9.8* | | | | | |
| Approach LOS | -- | -- | *A* | | | | | |

Copyright © 2010 University of Florida, All Rights Reserved *HCS+*™ Version 5.6 Generated: 12/18/2018 12:39 PM

# TWO-WAY STOP CONTROL SUMMARY

| General Information | | Site Information | |
|---|---|---|---|
| Analyst | *Oliver Gaskell* | Intersection | *A4* |
| Agency/Co. | *IBI Group* | Jurisdiction | *City of Yucaipa* |
| Date Performed | *12/18/2018* | Analysis Year | *2018* |
| Analysis Time Period | *Ex + Proj PM* | | |

Project Description *Yucaipa Pointe Traffic Impact Analysis Study*

East/West Street: *Driveway A4* North/South Street: *Avenue E*

Intersection Orientation: *North-South* Study Period (hrs): *0.25*

## Vehicle Volumes and Adjustments

| Major Street | Northbound | | | Southbound | | |
|---|---|---|---|---|---|---|
| Movement | 1 | 2 | 3 | 4 | 5 | 6 |
| | L | T | R | L | T | R |
| Volume (veh/h) | | *90* | *12* | *14* | *329* | |
| Peak-Hour Factor, PHF | *1.00* | *1.00* | *1.00* | *1.00* | *1.00* | *1.00* |
| Hourly Flow Rate, HFR (veh/h) | *0* | *90* | *12* | *14* | *329* | *0* |
| Percent Heavy Vehicles | *0* | -- | -- | *0* | -- | -- |
| Median Type | *Undivided* | | | | | |
| RT Channelized | | | *0* | | | *0* |
| Lanes | *0* | *1* | *0* | *0* | *1* | *0* |
| Configuration | | | *TR* | *LT* | | |
| Upstream Signal | | *0* | | | *0* | |

| Minor Street | Eastbound | | | Westbound | | |
|---|---|---|---|---|---|---|
| Movement | 7 | 8 | 9 | 10 | 11 | 12 |
| | L | T | R | L | T | R |
| Volume (veh/h) | | | | *10* | *0* | *11* |
| Peak-Hour Factor, PHF | *1.00* | *1.00* | *1.00* | *1.00* | *1.00* | *1.00* |
| Hourly Flow Rate, HFR (veh/h) | *0* | *0* | *0* | *10* | *0* | *11* |
| Percent Heavy Vehicles | *0* | *0* | *0* | *0* | *0* | *0* |
| Percent Grade (%) | | *0* | | | *0* | |
| Flared Approach | | *N* | | | *N* | |
| Storage | | *0* | | | *0* | |
| RT Channelized | | | *0* | | | *0* |
| Lanes | *0* | *0* | *0* | *0* | *1* | *0* |
| Configuration | | | | | *LTR* | |

## Delay, Queue Length, and Level of Service

| Approach | Northbound | Southbound | Westbound | | | Eastbound | | |
|---|---|---|---|---|---|---|---|---|
| Movement | 1 | 4 | 7 | 8 | 9 | 10 | 11 | 12 |
| Lane Configuration | | *LT* | | *LTR* | | | | |
| v (veh/h) | | *14* | | *21* | | | | |
| C (m) (veh/h) | | *1503* | | *720* | | | | |
| v/c | | *0.01* | | *0.03* | | | | |
| 95% queue length | | *0.03* | | *0.09* | | | | |
| Control Delay (s/veh) | | *7.4* | | *10.2* | | | | |
| LOS | | *A* | | *B* | | | | |
| Approach Delay (s/veh) | -- | -- | *10.2* | | | | | |
| Approach LOS | -- | -- | *B* | | | | | |

Copyright © 2010 University of Florida, All Rights Reserved *HCS+*™ Version 5.6 Generated: 12/18/2018 12:39 PM

# TWO-WAY STOP CONTROL SUMMARY

| General Information | | Site Information | |
|---|---|---|---|
| Analyst | *Oliver Gaskell* | Intersection | *A5* |
| Agency/Co. | *IBI Group* | Jurisdiction | *City of Yucaipa* |
| Date Performed | *12/18/2018* | Analysis Year | *2018* |
| Analysis Time Period | *Ex + Proj AM* | | |

Project Description *Yucaipa Pointe Traffic Impact Analysis Study*

East/West Street: *Driveway A5* North/South Street: *Avenue E*

Intersection Orientation: *North-South* Study Period (hrs): *0.25*

## Vehicle Volumes and Adjustments

| Major Street | Northbound | | | Southbound | | |
|---|---|---|---|---|---|---|
| Movement | 1 | 2 | 3 | 4 | 5 | 6 |
| | L | T | R | L | T | R |
| Volume (veh/h) | | *142* | *47* | *62* | *208* | |
| Peak-Hour Factor, PHF | *1.00* | *1.00* | *1.00* | *1.00* | *1.00* | *1.00* |
| Hourly Flow Rate, HFR (veh/h) | *0* | *142* | *47* | *62* | *208* | *0* |
| Percent Heavy Vehicles | *0* | -- | -- | *0* | -- | -- |
| Median Type | *Undivided* | | | | | |
| RT Channelized | | | *0* | | | *0* |
| Lanes | *0* | *1* | *1* | *0* | *1* | *0* |
| Configuration | | *T* | *R* | *LT* | | |
| Upstream Signal | | *0* | | | *0* | |

| Minor Street | Eastbound | | | Westbound | | |
|---|---|---|---|---|---|---|
| Movement | 7 | 8 | 9 | 10 | 11 | 12 |
| | L | T | R | L | T | R |
| Volume (veh/h) | | | | *44* | *0* | *66* |
| Peak-Hour Factor, PHF | *1.00* | *1.00* | *1.00* | *1.00* | *1.00* | *1.00* |
| Hourly Flow Rate, HFR (veh/h) | *0* | *0* | *0* | *44* | *0* | *66* |
| Percent Heavy Vehicles | *0* | *0* | *0* | *0* | *0* | *0* |
| Percent Grade (%) | | *0* | | | *0* | |
| Flared Approach | | *N* | | | *N* | |
| Storage | | *0* | | | *0* | |
| RT Channelized | | | *0* | | | *0* |
| Lanes | *0* | *0* | *0* | *0* | *1* | *0* |
| Configuration | | | | | *LTR* | |

## Delay, Queue Length, and Level of Service

| Approach | Northbound | Southbound | Westbound | | | Eastbound | | |
|---|---|---|---|---|---|---|---|---|
| Movement | 1 | 4 | 7 | 8 | 9 | 10 | 11 | 12 |
| Lane Configuration | | *LT* | | *LTR* | | | | |
| v (veh/h) | | *62* | | *110* | | | | |
| C (m) (veh/h) | | *1397* | | *706* | | | | |
| v/c | | *0.04* | | *0.16* | | | | |
| 95% queue length | | *0.14* | | *0.55* | | | | |
| Control Delay (s/veh) | | *7.7* | | *11.0* | | | | |
| LOS | | *A* | | *B* | | | | |
| Approach Delay (s/veh) | -- | -- | *11.0* | | | | | |
| Approach LOS | -- | -- | *B* | | | | | |

Copyright © 2010 University of Florida, All Rights Reserved *HCS+*™ Version 5.6 Generated: 12/18/2018 12:40 PM

# TWO-WAY STOP CONTROL SUMMARY

| General Information | | Site Information | |
|---|---|---|---|
| Analyst | *Oliver Gaskell* | Intersection | *A5* |
| Agency/Co. | *IBI Group* | Jurisdiction | *City of Yucaipa* |
| Date Performed | *12/18/2018* | Analysis Year | *2018* |
| Analysis Time Period | *Ex + Proj PM* | | |

Project Description *Yucaipa Pointe Traffic Impact Analysis Study*

East/West Street: *Driveway A5* North/South Street: *Avenue E*

Intersection Orientation: *North-South* Study Period (hrs): *0.25*

## Vehicle Volumes and Adjustments

| Major Street | Northbound | | | Southbound | | |
|---|---|---|---|---|---|---|
| Movement | 1 | 2 | 3 | 4 | 5 | 6 |
| | L | T | R | L | T | R |
| Volume (veh/h) | | *116* | *40* | *70* | *370* | |
| Peak-Hour Factor, PHF | *1.00* | *1.00* | *1.00* | *1.00* | *1.00* | *1.00* |
| Hourly Flow Rate, HFR (veh/h) | *0* | *116* | *40* | *70* | *370* | *0* |
| Percent Heavy Vehicles | *0* | -- | -- | *0* | -- | -- |
| Median Type | *Undivided* | | | | | |
| RT Channelized | | | *0* | | | *0* |
| Lanes | *0* | *1* | *1* | *0* | *1* | *0* |
| Configuration | | *T* | *R* | *LT* | | |
| Upstream Signal | | *0* | | | *0* | |

| Minor Street | Eastbound | | | Westbound | | |
|---|---|---|---|---|---|---|
| Movement | 7 | 8 | 9 | 10 | 11 | 12 |
| | L | T | R | L | T | R |
| Volume (veh/h) | | | | *35* | *0* | *62* |
| Peak-Hour Factor, PHF | *1.00* | *1.00* | *1.00* | *1.00* | *1.00* | *1.00* |
| Hourly Flow Rate, HFR (veh/h) | *0* | *0* | *0* | *35* | *0* | *62* |
| Percent Heavy Vehicles | *0* | *0* | *0* | *0* | *0* | *0* |
| Percent Grade (%) | *0* | | | *0* | | |
| Flared Approach | | *N* | | | *N* | |
| Storage | | *0* | | | *0* | |
| RT Channelized | | | *0* | | | *0* |
| Lanes | *0* | *0* | *0* | *0* | *1* | *0* |
| Configuration | | | | | *LTR* | |

## Delay, Queue Length, and Level of Service

| Approach | Northbound | Southbound | Westbound | | | Eastbound | | |
|---|---|---|---|---|---|---|---|---|
| Movement | 1 | 4 | 7 | 8 | 9 | 10 | 11 | 12 |
| Lane Configuration | | *LT* | | *LTR* | | | | |
| v (veh/h) | | *70* | | *97* | | | | |
| C (m) (veh/h) | | *1436* | | *658* | | | | |
| v/c | | *0.05* | | *0.15* | | | | |
| 95% queue length | | *0.15* | | *0.51* | | | | |
| Control Delay (s/veh) | | *7.6* | | *11.4* | | | | |
| LOS | | *A* | | *B* | | | | |
| Approach Delay (s/veh) | -- | -- | *11.4* | | | | | |
| Approach LOS | -- | -- | *B* | | | | | |

Copyright © 2010 University of Florida, All Rights Reserved *HCS+*™ Version 5.6 Generated: 12/18/2018 12:41 PM

# TWO-WAY STOP CONTROL SUMMARY

| General Information | | Site Information | |
|---|---|---|---|
| Analyst | *Oliver Gaskell* | Intersection | *A6* |
| Agency/Co. | *IBI Group* | Jurisdiction | *City of Yucaipa* |
| Date Performed | *12/18/2018* | Analysis Year | *2018* |
| Analysis Time Period | *Ex + Proj AM* | | |

Project Description *Yucaipa Pointe Traffic Impact Analysis Study*

East/West Street: *Driveway A6* North/South Street: *Avenue E*

Intersection Orientation: *North-South* Study Period (hrs): *0.25*

## Vehicle Volumes and Adjustments

| Major Street | Northbound | | | Southbound | | |
|---|---|---|---|---|---|---|
| Movement | 1 | 2 | 3 | 4 | 5 | 6 |
| | L | T | R | L | T | R |
| Volume (veh/h) | *21* | *97* | | | *157* | *96* |
| Peak-Hour Factor, PHF | *1.00* | *1.00* | *1.00* | *1.00* | *1.00* | *1.00* |
| Hourly Flow Rate, HFR (veh/h) | *21* | *97* | *0* | *0* | *157* | *96* |
| Percent Heavy Vehicles | *0* | -- | -- | *0* | -- | -- |
| Median Type | *Undivided* | | | | | |
| RT Channelized | | | *0* | | | *0* |
| Lanes | *0* | *1* | *0* | *0* | *1* | *1* |
| Configuration | *LT* | | | | *T* | *R* |
| Upstream Signal | | *0* | | | *0* | |

| Minor Street | Eastbound | | | Westbound | | |
|---|---|---|---|---|---|---|
| Movement | 7 | 8 | 9 | 10 | 11 | 12 |
| | L | T | R | L | T | R |
| Volume (veh/h) | *92* | *0* | *20* | | | |
| Peak-Hour Factor, PHF | *1.00* | *1.00* | *1.00* | *1.00* | *1.00* | *1.00* |
| Hourly Flow Rate, HFR (veh/h) | *92* | *0* | *20* | *0* | *0* | *0* |
| Percent Heavy Vehicles | *0* | *0* | *0* | *0* | *0* | *0* |
| Percent Grade (%) | | *0* | | | *0* | |
| Flared Approach | | *N* | | | *N* | |
| Storage | | *0* | | | *0* | |
| RT Channelized | | | *0* | | | *0* |
| Lanes | *0* | *1* | *0* | *0* | *0* | *0* |
| Configuration | | *LTR* | | | | |

## Delay, Queue Length, and Level of Service

| Approach | Northbound | Southbound | Westbound | | | Eastbound | | |
|---|---|---|---|---|---|---|---|---|
| Movement | 1 | 4 | 7 | 8 | 9 | 10 | 11 | 12 |
| Lane Configuration | *LT* | | | | | | *LTR* | |
| v (veh/h) | *21* | | | | | | *112* | |
| C (m) (veh/h) | *1324* | | | | | | *718* | |
| v/c | *0.02* | | | | | | *0.16* | |
| 95% queue length | *0.05* | | | | | | *0.55* | |
| Control Delay (s/veh) | *7.8* | | | | | | *10.9* | |
| LOS | *A* | | | | | | *B* | |
| Approach Delay (s/veh) | -- | -- | *10.9* | | | | | |
| Approach LOS | -- | -- | *B* | | | | | |

Copyright © 2010 University of Florida, All Rights Reserved *HCS+*™ Version 5.6 Generated: 12/18/2018 12:41 PM

# TWO-WAY STOP CONTROL SUMMARY

| General Information | | Site Information | |
|---|---|---|---|
| Analyst | *Oliver Gaskell* | Intersection | *A6* |
| Agency/Co. | *IBI Group* | Jurisdiction | *City of Yucaipa* |
| Date Performed | *12/18/2018* | Analysis Year | *2018* |
| Analysis Time Period | *Ex + Proj PM* | | |

Project Description *Yucaipa Pointe Traffic Impact Analysis Study*

East/West Street: *Driveway A6* North/South Street: *Avenue E*

Intersection Orientation: *North-South* Study Period (hrs): *0.25*

## Vehicle Volumes and Adjustments

| Major Street | Northbound | | | Southbound | | |
|---|---|---|---|---|---|---|
| Movement | 1 | 2 | 3 | 4 | 5 | 6 |
| | L | T | R | L | T | R |
| Volume (veh/h) | *17* | *84* | | | *327* | *78* |
| Peak-Hour Factor, PHF | *1.00* | *1.00* | *1.00* | *1.00* | *1.00* | *1.00* |
| Hourly Flow Rate, HFR (veh/h) | *17* | *84* | *0* | *0* | *327* | *78* |
| Percent Heavy Vehicles | *0* | -- | -- | *0* | -- | -- |
| Median Type | *Undivided* | | | | | |
| RT Channelized | | | *0* | | | *0* |
| Lanes | *0* | *1* | *0* | *0* | *1* | *1* |
| Configuration | *LT* | | | | *T* | *R* |
| Upstream Signal | | *0* | | | *0* | |

| Minor Street | Eastbound | | | Westbound | | |
|---|---|---|---|---|---|---|
| Movement | 7 | 8 | 9 | 10 | 11 | 12 |
| | L | T | R | L | T | R |
| Volume (veh/h) | *71* | *0* | *16* | | | |
| Peak-Hour Factor, PHF | *1.00* | *1.00* | *1.00* | *1.00* | *1.00* | *1.00* |
| Hourly Flow Rate, HFR (veh/h) | *71* | *0* | *16* | *0* | *0* | *0* |
| Percent Heavy Vehicles | *0* | *0* | *0* | *0* | *0* | *0* |
| Percent Grade (%) | | *0* | | | *0* | |
| Flared Approach | | *N* | | | *N* | |
| Storage | | *0* | | | *0* | |
| RT Channelized | | | *0* | | | *0* |
| Lanes | *0* | *1* | *0* | *0* | *0* | *0* |
| Configuration | | *LTR* | | | | |

## Delay, Queue Length, and Level of Service

| Approach | Northbound | Southbound | Westbound | | | Eastbound | | |
|---|---|---|---|---|---|---|---|---|
| Movement | 1 | 4 | 7 | 8 | 9 | 10 | 11 | 12 |
| Lane Configuration | *LT* | | | | | | *LTR* | |
| v (veh/h) | *17* | | | | | | *87* | |
| C (m) (veh/h) | *1165* | | | | | | *589* | |
| v/c | *0.01* | | | | | | *0.15* | |
| 95% queue length | *0.04* | | | | | | *0.52* | |
| Control Delay (s/veh) | *8.1* | | | | | | *12.2* | |
| LOS | *A* | | | | | | *B* | |
| Approach Delay (s/veh) | -- | -- | | | | *12.2* | | |
| Approach LOS | -- | -- | | | | *B* | | |

Copyright © 2010 University of Florida, All Rights Reserved *HCS+*™ Version 5.6 Generated: 12/18/2018 12:41 PM

# TWO-WAY STOP CONTROL SUMMARY

| General Information | | Site Information | |
|---|---|---|---|
| Analyst | *Oliver Gaskell* | Intersection | *A1* |
| Agency/Co. | *IBI Group* | Jurisdiction | *City of Yucaipa* |
| Date Performed | *12/18/2018* | Analysis Year | *2020* |
| Analysis Time Period | *Cu + Proj AM* | | |

Project Description *Yucaipa Pointe Traffic Impact Analysis Study*

East/West Street: *Yucaipa* | North/South Street: *Driveway A1*

Intersection Orientation: *East-West* | Study Period (hrs): *0.25*

## Vehicle Volumes and Adjustments

| Major Street | Eastbound | | | Westbound | | |
|---|---|---|---|---|---|---|
| Movement | 1 | 2 | 3 | 4 | 5 | 6 |
| | L | T | R | L | T | R |
| Volume (veh/h) | | *842* | *75* | | *1195* | |
| Peak-Hour Factor, PHF | *1.00* | *1.00* | *1.00* | *1.00* | *1.00* | *1.00* |
| Hourly Flow Rate, HFR (veh/h) | *0* | *842* | *75* | *0* | *1195* | *0* |
| Percent Heavy Vehicles | *0* | -- | -- | *0* | -- | -- |
| Median Type | *Undivided* | | | | | |
| RT Channelized | | | *0* | | | *0* |
| Lanes | *0* | *2* | *1* | *0* | *2* | *0* |
| Configuration | | *T* | *R* | | *T* | |
| Upstream Signal | | *0* | | | *0* | |

| Minor Street | Northbound | | | Southbound | | |
|---|---|---|---|---|---|---|
| Movement | 7 | 8 | 9 | 10 | 11 | 12 |
| | L | T | R | L | T | R |
| Volume (veh/h) | | | *5* | | | |
| Peak-Hour Factor, PHF | *1.00* | *1.00* | *1.00* | *1.00* | *1.00* | *1.00* |
| Hourly Flow Rate, HFR (veh/h) | *0* | *0* | *5* | *0* | *0* | *0* |
| Percent Heavy Vehicles | *0* | *0* | *0* | *0* | *0* | *0* |
| Percent Grade (%) | *0* | | | *0* | | |
| Flared Approach | | *N* | | | *N* | |
| Storage | | *0* | | | *0* | |
| RT Channelized | | | *0* | | | *0* |
| Lanes | *0* | *0* | *1* | *0* | *0* | *0* |
| Configuration | | | *R* | | | |

## Delay, Queue Length, and Level of Service

| Approach | Eastbound | Westbound | Northbound | | | Southbound | | |
|---|---|---|---|---|---|---|---|---|
| Movement | 1 | 4 | 7 | 8 | 9 | 10 | 11 | 12 |
| Lane Configuration | | | | | *R* | | | |
| v (veh/h) | | | | | *5* | | | |
| C (m) (veh/h) | | | | | *637* | | | |
| v/c | | | | | *0.01* | | | |
| 95% queue length | | | | | *0.02* | | | |
| Control Delay (s/veh) | | | | | *10.7* | | | |
| LOS | | | | | *B* | | | |
| Approach Delay (s/veh) | -- | -- | *10.7* | | | | | |
| Approach LOS | -- | -- | *B* | | | | | |

Copyright © 2010 University of Florida, All Rights Reserved *HCS+*™ Version 5.6 Generated: 12/18/2018 12:29 PM

# TWO-WAY STOP CONTROL SUMMARY

| General Information | | Site Information | |
|---|---|---|---|
| Analyst | *Oliver Gaskell* | Intersection | *A1* |
| Agency/Co. | *IBI Group* | Jurisdiction | *City of Yucaipa* |
| Date Performed | *12/18/2018* | Analysis Year | *2020* |
| Analysis Time Period | *Cu + Proj PM* | | |

Project Description *Yucaipa Pointe Traffic Impact Analysis Study*

East/West Street: *Yucaipa* | North/South Street: *Driveway A1*

Intersection Orientation: *East-West* | Study Period (hrs): *0.25*

## Vehicle Volumes and Adjustments

| Major Street | Eastbound | | | Westbound | | |
|---|---|---|---|---|---|---|
| Movement | 1 | 2 | 3 | 4 | 5 | 6 |
| | L | T | R | L | T | R |
| Volume (veh/h) | | *1474* | *61* | | *1150* | |
| Peak-Hour Factor, PHF | *1.00* | *1.00* | *1.00* | *1.00* | *1.00* | *1.00* |
| Hourly Flow Rate, HFR (veh/h) | *0* | *1474* | *61* | *0* | *1150* | *0* |
| Percent Heavy Vehicles | *0* | -- | -- | *0* | -- | -- |
| Median Type | *Undivided* | | | | | |
| RT Channelized | | | *0* | | | *0* |
| Lanes | *0* | *2* | *1* | *0* | *2* | *0* |
| Configuration | | *T* | *R* | | *T* | |
| Upstream Signal | | *0* | | | *0* | |

| Minor Street | Northbound | | | Southbound | | |
|---|---|---|---|---|---|---|
| Movement | 7 | 8 | 9 | 10 | 11 | 12 |
| | L | T | R | L | T | R |
| Volume (veh/h) | | | *4* | | | |
| Peak-Hour Factor, PHF | *1.00* | *1.00* | *1.00* | *1.00* | *1.00* | *1.00* |
| Hourly Flow Rate, HFR (veh/h) | *0* | *0* | *4* | *0* | *0* | *0* |
| Percent Heavy Vehicles | *0* | *0* | *0* | *0* | *0* | *0* |
| Percent Grade (%) | *0* | | | *0* | | |
| Flared Approach | | *N* | | | *N* | |
| Storage | | *0* | | | *0* | |
| RT Channelized | | | *0* | | | *0* |
| Lanes | *0* | *0* | *1* | *0* | *0* | *0* |
| Configuration | | | *R* | | | |

## Delay, Queue Length, and Level of Service

| Approach | Eastbound | Westbound | Northbound | | | Southbound | | |
|---|---|---|---|---|---|---|---|---|
| Movement | 1 | 4 | 7 | 8 | 9 | 10 | 11 | 12 |
| Lane Configuration | | | | | *R* | | | |
| v (veh/h) | | | | | *4* | | | |
| C (m) (veh/h) | | | | | *422* | | | |
| v/c | | | | | *0.01* | | | |
| 95% queue length | | | | | *0.03* | | | |
| Control Delay (s/veh) | | | | | *13.6* | | | |
| LOS | | | | | *B* | | | |
| Approach Delay (s/veh) | -- | -- | *13.6* | | | | | |
| Approach LOS | -- | -- | *B* | | | | | |

Copyright © 2010 University of Florida, All Rights Reserved *HCS+*™ Version 5.6 Generated: 12/18/2018 12:29 PM

# TWO-WAY STOP CONTROL SUMMARY

| General Information | | Site Information | |
|---|---|---|---|
| Analyst | *Oliver Gaskell* | Intersection | *A2* |
| Agency/Co. | *IBI Group* | Jurisdiction | *City of Yucaipa* |
| Date Performed | *12/18/2018* | Analysis Year | *2020* |
| Analysis Time Period | *Cu + Proj AM* | | |

Project Description *Yucaipa Pointe Traffic Impact Analysis Study*

East/West Street: *Driveway A2* North/South Street: *18th Street*

Intersection Orientation: *North-South* Study Period (hrs): *0.25*

## Vehicle Volumes and Adjustments

| Major Street | Northbound | | | Southbound | | |
|---|---|---|---|---|---|---|
| Movement | 1 | 2 | 3 | 4 | 5 | 6 |
| | L | T | R | L | T | R |
| Volume (veh/h) | *37* | *10* | | | *2* | *26* |
| Peak-Hour Factor, PHF | *1.00* | *1.00* | *1.00* | *1.00* | *1.00* | *1.00* |
| Hourly Flow Rate, HFR (veh/h) | *37* | *10* | *0* | *0* | *2* | *26* |
| Percent Heavy Vehicles | *0* | -- | -- | *0* | -- | -- |
| Median Type | *Undivided* | | | | | |
| RT Channelized | | | *0* | | | *0* |
| Lanes | *0* | *1* | *0* | *0* | *1* | *0* |
| Configuration | *LT* | | | | | *TR* |
| Upstream Signal | | *0* | | | *0* | |

| Minor Street | Eastbound | | | Westbound | | |
|---|---|---|---|---|---|---|
| Movement | 7 | 8 | 9 | 10 | 11 | 12 |
| | L | T | R | L | T | R |
| Volume (veh/h) | *24* | *0* | *34* | | | |
| Peak-Hour Factor, PHF | *1.00* | *1.00* | *1.00* | *1.00* | *1.00* | *1.00* |
| Hourly Flow Rate, HFR (veh/h) | *24* | *0* | *34* | *0* | *0* | *0* |
| Percent Heavy Vehicles | *0* | *0* | *0* | *0* | *0* | *0* |
| Percent Grade (%) | | *0* | | | *0* | |
| Flared Approach | | *N* | | | *N* | |
| Storage | | *0* | | | *0* | |
| RT Channelized | | | *0* | | | *0* |
| Lanes | *0* | *1* | *0* | *0* | *0* | *0* |
| Configuration | | *LTR* | | | | |

## Delay, Queue Length, and Level of Service

| Approach | Northbound | Southbound | Westbound | | | Eastbound | | |
|---|---|---|---|---|---|---|---|---|
| Movement | 1 | 4 | 7 | 8 | 9 | 10 | 11 | 12 |
| Lane Configuration | *LT* | | | | | | *LTR* | |
| v (veh/h) | *37* | | | | | | *58* | |
| C (m) (veh/h) | *1599* | | | | | | *984* | |
| v/c | *0.02* | | | | | | *0.06* | |
| 95% queue length | *0.07* | | | | | | *0.19* | |
| Control Delay (s/veh) | *7.3* | | | | | | *8.9* | |
| LOS | *A* | | | | | | *A* | |
| Approach Delay (s/veh) | -- | -- | *8.9* | | | | | |
| Approach LOS | -- | -- | *A* | | | | | |

Copyright © 2010 University of Florida, All Rights Reserved *HCS+*™ Version 5.6 Generated: 12/18/2018 12:30 PM

# TWO-WAY STOP CONTROL SUMMARY

| General Information | | Site Information | |
|---|---|---|---|
| Analyst | *Oliver Gaskell* | Intersection | *A2* |
| Agency/Co. | *IBI Group* | Jurisdiction | *City of Yucaipa* |
| Date Performed | *12/18/2018* | Analysis Year | *2020* |
| Analysis Time Period | *Cu + Proj PM* | | |

Project Description *Yucaipa Pointe Traffic Impact Analysis Study*

East/West Street: *Driveway A2* North/South Street: *18th Street*

Intersection Orientation: *North-South* Study Period (hrs): *0.25*

## Vehicle Volumes and Adjustments

| Major Street | Northbound | | | Southbound | | |
|---|---|---|---|---|---|---|
| Movement | 1 | 2 | 3 | 4 | 5 | 6 |
| | L | T | R | L | T | R |
| Volume (veh/h) | *64* | *6* | | | *0* | *98* |
| Peak-Hour Factor, PHF | *1.00* | *1.00* | *1.00* | *1.00* | *1.00* | *1.00* |
| Hourly Flow Rate, HFR (veh/h) | *64* | *6* | *0* | *0* | *0* | *98* |
| Percent Heavy Vehicles | *0* | -- | -- | *0* | -- | -- |
| Median Type | *Undivided* | | | | | |
| RT Channelized | | | *0* | | | *0* |
| Lanes | *0* | *1* | *0* | *0* | *1* | *0* |
| Configuration | *LT* | | | | | *TR* |
| Upstream Signal | | *0* | | | *0* | |

| Minor Street | Eastbound | | | Westbound | | |
|---|---|---|---|---|---|---|
| Movement | 7 | 8 | 9 | 10 | 11 | 12 |
| | L | T | R | L | T | R |
| Volume (veh/h) | *26* | *0* | *35* | | | |
| Peak-Hour Factor, PHF | *1.00* | *1.00* | *1.00* | *1.00* | *1.00* | *1.00* |
| Hourly Flow Rate, HFR (veh/h) | *26* | *0* | *35* | *0* | *0* | *0* |
| Percent Heavy Vehicles | *0* | *0* | *0* | *0* | *0* | *0* |
| Percent Grade (%) | | *0* | | | *0* | |
| Flared Approach | | *N* | | | *N* | |
| Storage | | *0* | | | *0* | |
| RT Channelized | | | *0* | | | *0* |
| Lanes | *0* | *1* | *0* | *0* | *0* | *0* |
| Configuration | | *LTR* | | | | |

## Delay, Queue Length, and Level of Service

| Approach | Northbound | Southbound | Westbound | | | Eastbound | | |
|---|---|---|---|---|---|---|---|---|
| Movement | 1 | 4 | 7 | 8 | 9 | 10 | 11 | 12 |
| Lane Configuration | *LT* | | | | | | *LTR* | |
| v (veh/h) | *64* | | | | | | *61* | |
| C (m) (veh/h) | *1508* | | | | | | *902* | |
| v/c | *0.04* | | | | | | *0.07* | |
| 95% queue length | *0.13* | | | | | | *0.22* | |
| Control Delay (s/veh) | *7.5* | | | | | | *9.3* | |
| LOS | *A* | | | | | | *A* | |
| Approach Delay (s/veh) | -- | -- | | | | *9.3* | | |
| Approach LOS | -- | -- | | | | *A* | | |

Copyright © 2010 University of Florida, All Rights Reserved *HCS+*™ Version 5.6 Generated: 12/18/2018 12:30 PM

# TWO-WAY STOP CONTROL SUMMARY

| General Information | | Site Information | |
|---|---|---|---|
| Analyst | *Oliver Gaskell* | Intersection | *A3* |
| Agency/Co. | *IBI Group* | Jurisdiction | *City of Yucaipa* |
| Date Performed | *12/18/2018* | Analysis Year | *2020* |
| Analysis Time Period | *Cu + Proj AM* | | |

Project Description *Yucaipa Pointe Traffic Impact Analysis Study*

East/West Street: *Driveway A3* North/South Street: *18th Street*

Intersection Orientation: *North-South* Study Period (hrs): *0.25*

## Vehicle Volumes and Adjustments

| Major Street | Northbound | | | Southbound | | |
|---|---|---|---|---|---|---|
| Movement | 1 | 2 | 3 | 4 | 5 | 6 |
| | L | T | R | L | T | R |
| Volume (veh/h) | *9* | *46* | | | *40* | *0* |
| Peak-Hour Factor, PHF | *1.00* | *1.00* | *1.00* | *1.00* | *1.00* | *1.00* |
| Hourly Flow Rate, HFR (veh/h) | *9* | *46* | *0* | *0* | *40* | *0* |
| Percent Heavy Vehicles | *0* | -- | -- | *0* | -- | -- |
| Median Type | *Undivided* | | | | | |
| RT Channelized | | | *0* | | | *0* |
| Lanes | *0* | *1* | *0* | *0* | *1* | *0* |
| Configuration | *LT* | | | | | *TR* |
| Upstream Signal | | *0* | | | *0* | |

| Minor Street | Eastbound | | | Westbound | | |
|---|---|---|---|---|---|---|
| Movement | 7 | 8 | 9 | 10 | 11 | 12 |
| | L | T | R | L | T | R |
| Volume (veh/h) | *1* | *0* | *8* | | | |
| Peak-Hour Factor, PHF | *1.00* | *1.00* | *1.00* | *1.00* | *1.00* | *1.00* |
| Hourly Flow Rate, HFR (veh/h) | *1* | *0* | *8* | *0* | *0* | *0* |
| Percent Heavy Vehicles | *0* | *0* | *0* | *0* | *0* | *0* |
| Percent Grade (%) | | *0* | | | *0* | |
| Flared Approach | | *N* | | | *N* | |
| Storage | | *0* | | | *0* | |
| RT Channelized | | | *0* | | | *0* |
| Lanes | *0* | *1* | *0* | *0* | *0* | *0* |
| Configuration | | *LTR* | | | | |

## Delay, Queue Length, and Level of Service

| Approach | Northbound | Southbound | Westbound | | | Eastbound | | |
|---|---|---|---|---|---|---|---|---|
| Movement | 1 | 4 | 7 | 8 | 9 | 10 | 11 | 12 |
| Lane Configuration | *LT* | | | | | | *LTR* | |
| v (veh/h) | *9* | | | | | | *9* | |
| C (m) (veh/h) | *1583* | | | | | | *1019* | |
| v/c | *0.01* | | | | | | *0.01* | |
| 95% queue length | *0.02* | | | | | | *0.03* | |
| Control Delay (s/veh) | *7.3* | | | | | | *8.6* | |
| LOS | *A* | | | | | | *A* | |
| Approach Delay (s/veh) | -- | -- | *8.6* | | | | | |
| Approach LOS | -- | -- | *A* | | | | | |

Copyright © 2010 University of Florida, All Rights Reserved *HCS+*™ Version 5.6 Generated: 12/18/2018 12:31 PM

# TWO-WAY STOP CONTROL SUMMARY

| General Information | | Site Information | |
|---|---|---|---|
| Analyst | *Oliver Gaskell* | Intersection | *A3* |
| Agency/Co. | *IBI Group* | Jurisdiction | *City of Yucaipa* |
| Date Performed | *12/18/2018* | Analysis Year | *2020* |
| Analysis Time Period | *Cu + Proj PM* | | |

Project Description *Yucaipa Pointe Traffic Impact Analysis Study*

East/West Street: *Driveway A3* North/South Street: *18th Street*

Intersection Orientation: *North-South* Study Period (hrs): *0.25*

## Vehicle Volumes and Adjustments

| Major Street | Northbound | | | Southbound | | |
|---|---|---|---|---|---|---|
| Movement | 1 | 2 | 3 | 4 | 5 | 6 |
| | L | T | R | L | T | R |
| Volume (veh/h) | *21* | *68* | | | *42* | *9* |
| Peak-Hour Factor, PHF | *1.00* | *1.00* | *1.00* | *1.00* | *1.00* | *1.00* |
| Hourly Flow Rate, HFR (veh/h) | *21* | *68* | *0* | *0* | *42* | *9* |
| Percent Heavy Vehicles | *0* | -- | -- | *0* | -- | -- |
| Median Type | *Undivided* | | | | | |
| RT Channelized | | | *0* | | | *0* |
| Lanes | *0* | *1* | *0* | *0* | *1* | *0* |
| Configuration | *LT* | | | | | *TR* |
| Upstream Signal | | *0* | | | *0* | |

| Minor Street | Eastbound | | | Westbound | | |
|---|---|---|---|---|---|---|
| Movement | 7 | 8 | 9 | 10 | 11 | 12 |
| | L | T | R | L | T | R |
| Volume (veh/h) | *1* | *0* | *9* | | | |
| Peak-Hour Factor, PHF | *1.00* | *1.00* | *1.00* | *1.00* | *1.00* | *1.00* |
| Hourly Flow Rate, HFR (veh/h) | *1* | *0* | *9* | *0* | *0* | *0* |
| Percent Heavy Vehicles | *0* | *0* | *0* | *0* | *0* | *0* |
| Percent Grade (%) | | *0* | | | *0* | |
| Flared Approach | | *N* | | | *N* | |
| Storage | | *0* | | | *0* | |
| RT Channelized | | | *0* | | | *0* |
| Lanes | *0* | *1* | *0* | *0* | *0* | *0* |
| Configuration | | *LTR* | | | | |

## Delay, Queue Length, and Level of Service

| Approach | Northbound | Southbound | Westbound | | | Eastbound | | |
|---|---|---|---|---|---|---|---|---|
| Movement | 1 | 4 | 7 | 8 | 9 | 10 | 11 | 12 |
| Lane Configuration | *LT* | | | | | | *LTR* | |
| v (veh/h) | *21* | | | | | | *10* | |
| C (m) (veh/h) | *1568* | | | | | | *1005* | |
| v/c | *0.01* | | | | | | *0.01* | |
| 95% queue length | *0.04* | | | | | | *0.03* | |
| Control Delay (s/veh) | *7.3* | | | | | | *8.6* | |
| LOS | *A* | | | | | | *A* | |
| Approach Delay (s/veh) | -- | -- | | | | *8.6* | | |
| Approach LOS | -- | -- | | | | *A* | | |

Copyright © 2010 University of Florida, All Rights Reserved *HCS+*™ Version 5.6 Generated: 12/18/2018 12:31 PM

# TWO-WAY STOP CONTROL SUMMARY

| General Information | | Site Information | |
|---|---|---|---|
| Analyst | *Oliver Gaskell* | Intersection | *A4* |
| Agency/Co. | *IBI Group* | Jurisdiction | *City of Yucaipa* |
| Date Performed | *12/18/2018* | Analysis Year | *2020* |
| Analysis Time Period | *Cu + Proj AM* | | |

Project Description *Yucaipa Pointe Traffic Impact Analysis Study*

East/West Street: *Driveway A4* North/South Street: *Avenue E*

Intersection Orientation: *North-South* Study Period (hrs): *0.25*

## Vehicle Volumes and Adjustments

| Major Street | Northbound | | | Southbound | | |
|---|---|---|---|---|---|---|
| Movement | 1 | 2 | 3 | 4 | 5 | 6 |
| | L | T | R | L | T | R |
| Volume (veh/h) | | *118* | *11* | *5* | *175* | |
| Peak-Hour Factor, PHF | *1.00* | *1.00* | *1.00* | *1.00* | *1.00* | *1.00* |
| Hourly Flow Rate, HFR (veh/h) | *0* | *118* | *11* | *5* | *175* | *0* |
| Percent Heavy Vehicles | *0* | -- | -- | *0* | -- | -- |
| Median Type | *Undivided* | | | | | |
| RT Channelized | | | *0* | | | *0* |
| Lanes | *0* | *1* | *0* | *0* | *1* | *0* |
| Configuration | | | *TR* | *LT* | | |
| Upstream Signal | | *0* | | | *0* | |

| Minor Street | Eastbound | | | Westbound | | |
|---|---|---|---|---|---|---|
| Movement | 7 | 8 | 9 | 10 | 11 | 12 |
| | L | T | R | L | T | R |
| Volume (veh/h) | | | | *11* | *0* | *6* |
| Peak-Hour Factor, PHF | *1.00* | *1.00* | *1.00* | *1.00* | *1.00* | *1.00* |
| Hourly Flow Rate, HFR (veh/h) | *0* | *0* | *0* | *11* | *0* | *6* |
| Percent Heavy Vehicles | *0* | *0* | *0* | *0* | *0* | *0* |
| Percent Grade (%) | | *0* | | | *0* | |
| Flared Approach | | *N* | | | *N* | |
| Storage | | *0* | | | *0* | |
| RT Channelized | | | *0* | | | *0* |
| Lanes | *0* | *0* | *0* | *0* | *1* | *0* |
| Configuration | | | | | *LTR* | |

## Delay, Queue Length, and Level of Service

| Approach | Northbound | Southbound | Westbound | | | Eastbound | | |
|---|---|---|---|---|---|---|---|---|
| Movement | 1 | 4 | 7 | 8 | 9 | 10 | 11 | 12 |
| Lane Configuration | | *LT* | | *LTR* | | | | |
| v (veh/h) | | *5* | | *17* | | | | |
| C (m) (veh/h) | | *1469* | | *756* | | | | |
| v/c | | *0.00* | | *0.02* | | | | |
| 95% queue length | | *0.01* | | *0.07* | | | | |
| Control Delay (s/veh) | | *7.5* | | *9.9* | | | | |
| LOS | | *A* | | *A* | | | | |
| Approach Delay (s/veh) | -- | -- | *9.9* | | | | | |
| Approach LOS | -- | -- | *A* | | | | | |

Copyright © 2010 University of Florida, All Rights Reserved *HCS+*™ Version 5.6 Generated: 12/18/2018 12:32 PM

# TWO-WAY STOP CONTROL SUMMARY

| General Information | | Site Information | |
|---|---|---|---|
| Analyst | *Oliver Gaskell* | Intersection | *A4* |
| Agency/Co. | *IBI Group* | Jurisdiction | *City of Yucaipa* |
| Date Performed | *12/18/2018* | Analysis Year | *2020* |
| Analysis Time Period | *Cu + Proj PM* | | |

Project Description *Yucaipa Pointe Traffic Impact Analysis Study*

East/West Street: *Driveway A4* North/South Street: *Avenue E*

Intersection Orientation: *North-South* Study Period (hrs): *0.25*

## Vehicle Volumes and Adjustments

| Major Street | Northbound | | | Southbound | | |
|---|---|---|---|---|---|---|
| Movement | 1 | 2 | 3 | 4 | 5 | 6 |
| | L | T | R | L | T | R |
| Volume (veh/h) | | *94* | *12* | *14* | *343* | |
| Peak-Hour Factor, PHF | *1.00* | *1.00* | *1.00* | *1.00* | *1.00* | *1.00* |
| Hourly Flow Rate, HFR (veh/h) | *0* | *94* | *12* | *14* | *343* | *0* |
| Percent Heavy Vehicles | *0* | -- | -- | *0* | -- | -- |
| Median Type | *Undivided* | | | | | |
| RT Channelized | | | *0* | | | *0* |
| Lanes | *0* | *1* | *0* | *0* | *1* | *0* |
| Configuration | | | *TR* | *LT* | | |
| Upstream Signal | | *0* | | | *0* | |

| Minor Street | Eastbound | | | Westbound | | |
|---|---|---|---|---|---|---|
| Movement | 7 | 8 | 9 | 10 | 11 | 12 |
| | L | T | R | L | T | R |
| Volume (veh/h) | | | | *10* | *0* | *11* |
| Peak-Hour Factor, PHF | *1.00* | *1.00* | *1.00* | *1.00* | *1.00* | *1.00* |
| Hourly Flow Rate, HFR (veh/h) | *0* | *0* | *0* | *10* | *0* | *11* |
| Percent Heavy Vehicles | *0* | *0* | *0* | *0* | *0* | *0* |
| Percent Grade (%) | | *0* | | | *0* | |
| Flared Approach | | *N* | | | *N* | |
| Storage | | *0* | | | *0* | |
| RT Channelized | | | *0* | | | *0* |
| Lanes | *0* | *0* | *0* | *0* | *1* | *0* |
| Configuration | | | | | *LTR* | |

## Delay, Queue Length, and Level of Service

| Approach | Northbound | Southbound | Westbound | | | Eastbound | | |
|---|---|---|---|---|---|---|---|---|
| Movement | 1 | 4 | 7 | 8 | 9 | 10 | 11 | 12 |
| Lane Configuration | | *LT* | | *LTR* | | | | |
| v (veh/h) | | *14* | | *21* | | | | |
| C (m) (veh/h) | | *1498* | | *709* | | | | |
| v/c | | *0.01* | | *0.03* | | | | |
| 95% queue length | | *0.03* | | *0.09* | | | | |
| Control Delay (s/veh) | | *7.4* | | *10.2* | | | | |
| LOS | | *A* | | *B* | | | | |
| Approach Delay (s/veh) | -- | -- | *10.2* | | | | | |
| Approach LOS | -- | -- | *B* | | | | | |

Copyright © 2010 University of Florida, All Rights Reserved *HCS+*™ Version 5.6 Generated: 12/18/2018 12:32 PM

# TWO-WAY STOP CONTROL SUMMARY

| General Information | | Site Information | |
|---|---|---|---|
| Analyst | *Oliver Gaskell* | Intersection | *A5* |
| Agency/Co. | *IBI Group* | Jurisdiction | *City of Yucaipa* |
| Date Performed | *12/18/2018* | Analysis Year | *2020* |
| Analysis Time Period | *Cu + Proj AM* | | |

Project Description *Yucaipa Pointe Traffic Impact Analysis Study*

East/West Street: *Driveway A5* North/South Street: *Avenue E*

Intersection Orientation: *North-South* Study Period (hrs): *0.25*

## Vehicle Volumes and Adjustments

| Major Street | Northbound | | | Southbound | | |
|---|---|---|---|---|---|---|
| Movement | 1 | 2 | 3 | 4 | 5 | 6 |
| | L | T | R | L | T | R |
| Volume (veh/h) | | *148* | *47* | *62* | *212* | |
| Peak-Hour Factor, PHF | *1.00* | *1.00* | *1.00* | *1.00* | *1.00* | *1.00* |
| Hourly Flow Rate, HFR (veh/h) | *0* | *148* | *47* | *62* | *212* | *0* |
| Percent Heavy Vehicles | *0* | -- | -- | *0* | -- | -- |
| Median Type | *Undivided* | | | | | |
| RT Channelized | | | *0* | | | *0* |
| Lanes | *0* | *1* | *1* | *0* | *1* | *0* |
| Configuration | | *T* | *R* | *LT* | | |
| Upstream Signal | | *0* | | | *0* | |

| Minor Street | Eastbound | | | Westbound | | |
|---|---|---|---|---|---|---|
| Movement | 7 | 8 | 9 | 10 | 11 | 12 |
| | L | T | R | L | T | R |
| Volume (veh/h) | | | | *44* | *0* | *66* |
| Peak-Hour Factor, PHF | *1.00* | *1.00* | *1.00* | *1.00* | *1.00* | *1.00* |
| Hourly Flow Rate, HFR (veh/h) | *0* | *0* | *0* | *44* | *0* | *66* |
| Percent Heavy Vehicles | *0* | *0* | *0* | *0* | *0* | *0* |
| Percent Grade (%) | | *0* | | | *0* | |
| Flared Approach | | *N* | | | *N* | |
| Storage | | *0* | | | *0* | |
| RT Channelized | | | *0* | | | *0* |
| Lanes | *0* | *0* | *0* | *0* | *1* | *0* |
| Configuration | | | | | *LTR* | |

## Delay, Queue Length, and Level of Service

| Approach | Northbound | Southbound | Westbound | | | Eastbound | | |
|---|---|---|---|---|---|---|---|---|
| Movement | 1 | 4 | 7 | 8 | 9 | 10 | 11 | 12 |
| Lane Configuration | | *LT* | | *LTR* | | | | |
| v (veh/h) | | *62* | | *110* | | | | |
| C (m) (veh/h) | | *1390* | | *699* | | | | |
| v/c | | *0.04* | | *0.16* | | | | |
| 95% queue length | | *0.14* | | *0.56* | | | | |
| Control Delay (s/veh) | | *7.7* | | *11.1* | | | | |
| LOS | | *A* | | *B* | | | | |
| Approach Delay (s/veh) | -- | -- | *11.1* | | | | | |
| Approach LOS | -- | -- | *B* | | | | | |

Copyright © 2010 University of Florida, All Rights Reserved *HCS+*™ Version 5.6 Generated: 12/18/2018 12:33 PM

# TWO-WAY STOP CONTROL SUMMARY

| General Information | | Site Information | |
|---|---|---|---|
| Analyst | *Oliver Gaskell* | Intersection | *A5* |
| Agency/Co. | *IBI Group* | Jurisdiction | *City of Yucaipa* |
| Date Performed | *12/18/2018* | Analysis Year | *2020* |
| Analysis Time Period | *Cu + Proj PM* | | |

Project Description *Yucaipa Pointe Traffic Impact Analysis Study*

East/West Street: *Driveway A5* North/South Street: *Avenue E*

Intersection Orientation: *North-South* Study Period (hrs): *0.25*

## Vehicle Volumes and Adjustments

| Major Street | Northbound | | | Southbound | | |
|---|---|---|---|---|---|---|
| Movement | 1 | 2 | 3 | 4 | 5 | 6 |
| | L | T | R | L | T | R |
| Volume (veh/h) | | *120* | *40* | *70* | *384* | |
| Peak-Hour Factor, PHF | *1.00* | *1.00* | *1.00* | *1.00* | *1.00* | *1.00* |
| Hourly Flow Rate, HFR (veh/h) | *0* | *120* | *40* | *70* | *384* | *0* |
| Percent Heavy Vehicles | *0* | -- | -- | *0* | -- | -- |
| Median Type | *Undivided* | | | | | |
| RT Channelized | | | *0* | | | *0* |
| Lanes | *0* | *1* | *1* | *0* | *1* | *0* |
| Configuration | | *T* | *R* | *LT* | | |
| Upstream Signal | | *0* | | | *0* | |

| Minor Street | Eastbound | | | Westbound | | |
|---|---|---|---|---|---|---|
| Movement | 7 | 8 | 9 | 10 | 11 | 12 |
| | L | T | R | L | T | R |
| Volume (veh/h) | | | | *35* | *0* | *62* |
| Peak-Hour Factor, PHF | *1.00* | *1.00* | *1.00* | *1.00* | *1.00* | *1.00* |
| Hourly Flow Rate, HFR (veh/h) | *0* | *0* | *0* | *35* | *0* | *62* |
| Percent Heavy Vehicles | *0* | *0* | *0* | *0* | *0* | *0* |
| Percent Grade (%) | | *0* | | | *0* | |
| Flared Approach | | *N* | | | *N* | |
| Storage | | *0* | | | *0* | |
| RT Channelized | | | *0* | | | *0* |
| Lanes | *0* | *0* | *0* | *0* | *1* | *0* |
| Configuration | | | | | *LTR* | |

## Delay, Queue Length, and Level of Service

| Approach | Northbound | Southbound | Westbound | | | Eastbound | | |
|---|---|---|---|---|---|---|---|---|
| Movement | 1 | 4 | 7 | 8 | 9 | 10 | 11 | 12 |
| Lane Configuration | | *LT* | | *LTR* | | | | |
| v (veh/h) | | *70* | | *97* | | | | |
| C (m) (veh/h) | | *1432* | | *647* | | | | |
| v/c | | *0.05* | | *0.15* | | | | |
| 95% queue length | | *0.15* | | *0.53* | | | | |
| Control Delay (s/veh) | | *7.6* | | *11.5* | | | | |
| LOS | | *A* | | *B* | | | | |
| Approach Delay (s/veh) | -- | -- | *11.5* | | | | | |
| Approach LOS | -- | -- | *B* | | | | | |

Copyright © 2010 University of Florida, All Rights Reserved *HCS+*™ Version 5.6 Generated: 12/18/2018 12:33 PM

# TWO-WAY STOP CONTROL SUMMARY

| General Information | | Site Information | |
|---|---|---|---|
| Analyst | *Oliver Gaskell* | Intersection | *A6* |
| Agency/Co. | *IBI Group* | Jurisdiction | *City of Yucaipa* |
| Date Performed | *12/18/2018* | Analysis Year | *2020* |
| Analysis Time Period | *Cu + Proj AM* | | |

Project Description *Yucaipa Pointe Traffic Impact Analysis Study*

East/West Street: *Driveway A6* North/South Street: *Avenue E*

Intersection Orientation: *North-South* Study Period (hrs): *0.25*

## Vehicle Volumes and Adjustments

| Major Street | Northbound | | | Southbound | | |
|---|---|---|---|---|---|---|
| Movement | 1 | 2 | 3 | 4 | 5 | 6 |
| | L | T | R | L | T | R |
| Volume (veh/h) | *21* | *103* | | | *161* | *96* |
| Peak-Hour Factor, PHF | *1.00* | *1.00* | *1.00* | *1.00* | *1.00* | *1.00* |
| Hourly Flow Rate, HFR (veh/h) | *21* | *103* | *0* | *0* | *161* | *96* |
| Percent Heavy Vehicles | *0* | -- | -- | *0* | -- | -- |
| Median Type | *Undivided* | | | | | |
| RT Channelized | | | *0* | | | *0* |
| Lanes | *0* | *1* | *0* | *0* | *1* | *1* |
| Configuration | *LT* | | | | *T* | *R* |
| Upstream Signal | | *0* | | | *0* | |

| Minor Street | Eastbound | | | Westbound | | |
|---|---|---|---|---|---|---|
| Movement | 7 | 8 | 9 | 10 | 11 | 12 |
| | L | T | R | L | T | R |
| Volume (veh/h) | *92* | *0* | *20* | | | |
| Peak-Hour Factor, PHF | *1.00* | *1.00* | *1.00* | *1.00* | *1.00* | *1.00* |
| Hourly Flow Rate, HFR (veh/h) | *92* | *0* | *20* | *0* | *0* | *0* |
| Percent Heavy Vehicles | *0* | *0* | *0* | *0* | *0* | *0* |
| Percent Grade (%) | | *0* | | | *0* | |
| Flared Approach | | *N* | | | *N* | |
| Storage | | *0* | | | *0* | |
| RT Channelized | | | *0* | | | *0* |
| Lanes | *0* | *1* | *0* | *0* | *0* | *0* |
| Configuration | | *LTR* | | | | |

## Delay, Queue Length, and Level of Service

| Approach | Northbound | Southbound | Westbound | | | Eastbound | | |
|---|---|---|---|---|---|---|---|---|
| Movement | 1 | 4 | 7 | 8 | 9 | 10 | 11 | 12 |
| Lane Configuration | *LT* | | | | | | *LTR* | |
| v (veh/h) | *21* | | | | | | *112* | |
| C (m) (veh/h) | *1320* | | | | | | *709* | |
| v/c | *0.02* | | | | | | *0.16* | |
| 95% queue length | *0.05* | | | | | | *0.56* | |
| Control Delay (s/veh) | *7.8* | | | | | | *11.0* | |
| LOS | *A* | | | | | | *B* | |
| Approach Delay (s/veh) | -- | -- | | | | *11.0* | | |
| Approach LOS | -- | -- | | | | *B* | | |

Copyright © 2010 University of Florida, All Rights Reserved *HCS+*™ Version 5.6 Generated: 12/18/2018 12:34 PM

# TWO-WAY STOP CONTROL SUMMARY

| General Information | | Site Information | |
|---|---|---|---|
| Analyst | *Oliver Gaskell* | Intersection | *A6* |
| Agency/Co. | *IBI Group* | Jurisdiction | *City of Yucaipa* |
| Date Performed | *12/18/2018* | Analysis Year | *2020* |
| Analysis Time Period | *Cu + Proj PM* | | |

Project Description *Yucaipa Pointe Traffic Impact Analysis Study*

East/West Street: *Driveway A6* North/South Street: *Avenue E*

Intersection Orientation: *North-South* Study Period (hrs): *0.25*

## Vehicle Volumes and Adjustments

| Major Street | Northbound | | | Southbound | | |
|---|---|---|---|---|---|---|
| Movement | 1 | 2 | 3 | 4 | 5 | 6 |
| | L | T | R | L | T | R |
| Volume (veh/h) | *17* | *88* | | | *341* | *78* |
| Peak-Hour Factor, PHF | *1.00* | *1.00* | *1.00* | *1.00* | *1.00* | *1.00* |
| Hourly Flow Rate, HFR (veh/h) | *17* | *88* | *0* | *0* | *341* | *78* |
| Percent Heavy Vehicles | *0* | -- | -- | *0* | -- | -- |
| Median Type | *Undivided* | | | | | |
| RT Channelized | | | *0* | | | *0* |
| Lanes | *0* | *1* | *0* | *0* | *1* | *1* |
| Configuration | *LT* | | | | *T* | *R* |
| Upstream Signal | | *0* | | | *0* | |

| Minor Street | Eastbound | | | Westbound | | |
|---|---|---|---|---|---|---|
| Movement | 7 | 8 | 9 | 10 | 11 | 12 |
| | L | T | R | L | T | R |
| Volume (veh/h) | *71* | *0* | *16* | | | |
| Peak-Hour Factor, PHF | *1.00* | *1.00* | *1.00* | *1.00* | *1.00* | *1.00* |
| Hourly Flow Rate, HFR (veh/h) | *71* | *0* | *16* | *0* | *0* | *0* |
| Percent Heavy Vehicles | *0* | *0* | *0* | *0* | *0* | *0* |
| Percent Grade (%) | | *0* | | | *0* | |
| Flared Approach | | *N* | | | *N* | |
| Storage | | *0* | | | *0* | |
| RT Channelized | | | *0* | | | *0* |
| Lanes | *0* | *1* | *0* | *0* | *0* | *0* |
| Configuration | | *LTR* | | | | |

## Delay, Queue Length, and Level of Service

| Approach | Northbound | Southbound | Westbound | | | Eastbound | | |
|---|---|---|---|---|---|---|---|---|
| Movement | 1 | 4 | 7 | 8 | 9 | 10 | 11 | 12 |
| Lane Configuration | *LT* | | | | | | *LTR* | |
| v (veh/h) | *17* | | | | | | *87* | |
| C (m) (veh/h) | *1151* | | | | | | *576* | |
| v/c | *0.01* | | | | | | *0.15* | |
| 95% queue length | *0.04* | | | | | | *0.53* | |
| Control Delay (s/veh) | *8.2* | | | | | | *12.4* | |
| LOS | *A* | | | | | | *B* | |
| Approach Delay (s/veh) | -- | -- | | | | *12.4* | | |
| Approach LOS | -- | -- | | | | *B* | | |

Copyright © 2010 University of Florida, All Rights Reserved *HCS+*™ Version 5.6 Generated: 12/18/2018 12:35 PM

# Appendix E: Mitigated LOS Worksheets

# HCM 2010 Signalized Intersection Summary
## 150: Yucaipa Blvd & Knollhaven Lane

12/20/2018

| Movement | EBL | EBT | EBR | WBL | WBT | WBR | NBL | NBT | NBR | SBL | SBT | SBR |
|---|---|---|---|---|---|---|---|---|---|---|---|---|
| Lane Configurations | | | | | | | | | | | | |
| Traffic Volume (veh/h) | 10 | 500 | 217 | 181 | 629 | 3 | 265 | 16 | 164 | 1 | 17 | 7 |
| Future Volume (veh/h) | 10 | 500 | 217 | 181 | 629 | 3 | 265 | 16 | 164 | 1 | 17 | 7 |
| Number | 7 | 4 | 14 | 3 | 8 | 18 | 5 | 2 | 12 | 1 | 6 | 16 |
| Initial Q (Qb), veh | 0 | 0 | 0 | 0 | 0 | 0 | 0 | 0 | 0 | 0 | 0 | 0 |
| Ped-Bike Adj(A_pbT) | 1.00 | | 1.00 | 1.00 | | 1.00 | 1.00 | | 1.00 | 1.00 | | 1.00 |
| Parking Bus, Adj | 1.00 | 1.00 | 1.00 | 1.00 | 1.00 | 1.00 | 1.00 | 1.00 | 1.00 | 1.00 | 1.00 | 1.00 |
| Adj Sat Flow, veh/h/ln | 1765 | 1765 | 1800 | 1765 | 1765 | 1800 | 1765 | 1765 | 1800 | 1765 | 1765 | 1800 |
| Adj Flow Rate, veh/h | 11 | 543 | 236 | 197 | 684 | 3 | 288 | 17 | 178 | 1 | 18 | 8 |
| Adj No. of Lanes | 1 | 2 | 0 | 1 | 2 | 0 | 2 | 1 | 0 | 1 | 1 | 0 |
| Peak Hour Factor | 0.92 | 0.92 | 0.92 | 0.92 | 0.92 | 0.92 | 0.92 | 0.92 | 0.92 | 0.92 | 0.92 | 0.92 |
| Percent Heavy Veh, % | 2 | 2 | 2 | 2 | 2 | 2 | 2 | 2 | 2 | 2 | 2 | 2 |
| Cap, veh/h | 19 | 605 | 262 | 243 | 1366 | 6 | 326 | 52 | 541 | 384 | 259 | 115 |
| Arrive On Green | 0.01 | 0.27 | 0.27 | 0.14 | 0.40 | 0.40 | 0.10 | 0.39 | 0.39 | 0.22 | 0.22 | 0.22 |
| Sat Flow, veh/h | 1681 | 2279 | 988 | 1681 | 3424 | 15 | 3261 | 133 | 1387 | 1183 | 1159 | 515 |
| Grp Volume(v), veh/h | 11 | 399 | 380 | 197 | 335 | 352 | 288 | 0 | 195 | 1 | 0 | 26 |
| Grp Sat Flow(s),veh/h/ln | 1681 | 1676 | 1590 | 1681 | 1676 | 1762 | 1630 | 0 | 1520 | 1183 | 0 | 1674 |
| Q Serve(g_s), s | 0.4 | 13.8 | 13.8 | 6.8 | 9.0 | 9.0 | 5.2 | 0.0 | 5.4 | 0.0 | 0.0 | 0.7 |
| Cycle Q Clear(g_c), s | 0.4 | 13.8 | 13.8 | 6.8 | 9.0 | 9.0 | 5.2 | 0.0 | 5.4 | 0.0 | 0.0 | 0.7 |
| Prop In Lane | 1.00 | | 0.62 | 1.00 | | 0.01 | 1.00 | | 0.91 | 1.00 | | 0.31 |
| Lane Grp Cap(c), veh/h | 19 | 445 | 422 | 243 | 669 | 703 | 326 | 0 | 593 | 384 | 0 | 374 |
| V/C Ratio(X) | 0.59 | 0.90 | 0.90 | 0.81 | 0.50 | 0.50 | 0.88 | 0.00 | 0.33 | 0.00 | 0.00 | 0.07 |
| Avail Cap(c_a), veh/h | 224 | 447 | 424 | 364 | 669 | 703 | 326 | 0 | 593 | 384 | 0 | 374 |
| HCM Platoon Ratio | 1.00 | 1.00 | 1.00 | 1.00 | 1.00 | 1.00 | 1.00 | 1.00 | 1.00 | 1.00 | 1.00 | 1.00 |
| Upstream Filter(I) | 0.71 | 0.71 | 0.71 | 1.00 | 1.00 | 1.00 | 1.00 | 0.00 | 1.00 | 1.00 | 0.00 | 1.00 |
| Uniform Delay (d), s/veh | 29.5 | 21.2 | 21.3 | 24.9 | 13.5 | 13.5 | 26.7 | 0.0 | 12.8 | 18.1 | 0.0 | 18.4 |
| Incr Delay (d2), s/veh | 19.0 | 15.6 | 16.8 | 8.1 | 0.6 | 0.6 | 23.6 | 0.0 | 1.5 | 0.0 | 0.0 | 0.4 |
| Initial Q Delay(d3),s/veh | 0.0 | 0.0 | 0.0 | 0.0 | 0.0 | 0.0 | 0.0 | 0.0 | 0.0 | 0.0 | 0.0 | 0.0 |
| %ile BackOfQ(50%),veh/ln | 0.3 | 8.2 | 8.0 | 3.7 | 4.2 | 4.4 | 3.4 | 0.0 | 2.5 | 0.0 | 0.0 | 0.4 |
| LnGrp Delay(d),s/veh | 48.5 | 36.9 | 38.0 | 33.0 | 14.1 | 14.1 | 50.2 | 0.0 | 14.3 | 18.1 | 0.0 | 18.7 |
| LnGrp LOS | D | D | D | C | B | B | D | | B | B | | B |
| Approach Vol, veh/h | | 790 | | | 884 | | | 483 | | | 27 | |
| Approach Delay, s/veh | | 37.6 | | | 18.3 | | | 35.7 | | | 18.7 | |
| Approach LOS | | D | | | B | | | D | | | B | |

| Timer | 1 | 2 | 3 | 4 | 5 | 6 | 7 | 8 |
|---|---|---|---|---|---|---|---|---|
| Assigned Phs | | 2 | 3 | 4 | 5 | 6 | 7 | 8 |
| Phs Duration (G+Y+Rc), s | | 27.4 | 12.7 | 19.9 | 10.0 | 17.4 | 4.7 | 27.9 |
| Change Period (Y+Rc), s | | 4.0 | 4.0 | 4.0 | 4.0 | 4.0 | 4.0 | 4.0 |
| Max Green Setting (Gmax), s | | 19.0 | 13.0 | 16.0 | 6.0 | 9.0 | 8.0 | 21.0 |
| Max Q Clear Time (g_c+I1), s | | 7.4 | 8.8 | 15.8 | 7.2 | 2.7 | 2.4 | 11.0 |
| Green Ext Time (p_c), s | | 0.8 | 0.2 | 0.1 | 0.0 | 0.0 | 0.0 | 3.0 |

| Intersection Summary | |
|---|---|
| HCM 2010 Ctrl Delay | 29.1 |
| HCM 2010 LOS | C |

Notes

User approved pedestrian interval to be less than phase max green.

# HCM 2010 Signalized Intersection Summary
## 150: Yucaipa Blvd & Knollhaven Lane

12/20/2018

| Movement | EBL | EBT | EBR | WBL | WBT | WBR | NBL | NBT | NBR | SBL | SBT | SBR |
|---|---|---|---|---|---|---|---|---|---|---|---|---|
| Lane Configurations | | | | | | | | | | | | |
| Traffic Volume (veh/h) | 14 | 1130 | 316 | 182 | 628 | 3 | 237 | 14 | 148 | 9 | 24 | 21 |
| Future Volume (veh/h) | 14 | 1130 | 316 | 182 | 628 | 3 | 237 | 14 | 148 | 9 | 24 | 21 |
| Number | 7 | 4 | 14 | 3 | 8 | 18 | 5 | 2 | 12 | 1 | 6 | 16 |
| Initial Q (Qb), veh | 0 | 0 | 0 | 0 | 0 | 0 | 0 | 0 | 0 | 0 | 0 | 0 |
| Ped-Bike Adj(A_pbT) | 1.00 | | 1.00 | 1.00 | | 1.00 | 1.00 | | 1.00 | 1.00 | | 1.00 |
| Parking Bus, Adj | 1.00 | 1.00 | 1.00 | 1.00 | 1.00 | 1.00 | 1.00 | 1.00 | 1.00 | 1.00 | 1.00 | 1.00 |
| Adj Sat Flow, veh/h/ln | 1765 | 1765 | 1800 | 1765 | 1765 | 1800 | 1765 | 1765 | 1800 | 1765 | 1765 | 1800 |
| Adj Flow Rate, veh/h | 15 | 1228 | 343 | 198 | 683 | 3 | 258 | 15 | 161 | 10 | 26 | 23 |
| Adj No. of Lanes | 1 | 3 | 0 | 1 | 3 | 0 | 2 | 1 | 0 | 1 | 1 | 0 |
| Peak Hour Factor | 0.92 | 0.92 | 0.92 | 0.92 | 0.92 | 0.92 | 0.92 | 0.92 | 0.92 | 0.92 | 0.92 | 0.92 |
| Percent Heavy Veh, % | 2 | 2 | 2 | 2 | 2 | 2 | 2 | 2 | 2 | 2 | 2 | 2 |
| Cap, veh/h | 24 | 1304 | 364 | 242 | 2365 | 10 | 353 | 43 | 464 | 306 | 145 | 128 |
| Arrive On Green | 0.01 | 0.35 | 0.35 | 0.14 | 0.48 | 0.48 | 0.11 | 0.33 | 0.33 | 0.17 | 0.17 | 0.17 |
| Sat Flow, veh/h | 1681 | 3746 | 1046 | 1681 | 4951 | 22 | 3261 | 129 | 1390 | 1204 | 865 | 765 |
| Grp Volume(v), veh/h | 15 | 1053 | 518 | 198 | 443 | 243 | 258 | 0 | 176 | 10 | 0 | 49 |
| Grp Sat Flow(s),veh/h/ln | 1681 | 1606 | 1580 | 1681 | 1606 | 1761 | 1630 | 0 | 1519 | 1204 | 0 | 1630 |
| Q Serve(g_s), s | 0.6 | 21.9 | 21.9 | 7.9 | 5.8 | 5.8 | 5.3 | 0.0 | 6.0 | 0.5 | 0.0 | 1.8 |
| Cycle Q Clear(g_c), s | 0.6 | 21.9 | 21.9 | 7.9 | 5.8 | 5.8 | 5.3 | 0.0 | 6.0 | 0.5 | 0.0 | 1.8 |
| Prop In Lane | 1.00 | | 0.66 | 1.00 | | 0.01 | 1.00 | | 0.91 | 1.00 | | 0.47 |
| Lane Grp Cap(c), veh/h | 24 | 1118 | 550 | 242 | 1534 | 841 | 353 | 0 | 507 | 306 | 0 | 273 |
| V/C Ratio(X) | 0.62 | 0.94 | 0.94 | 0.82 | 0.29 | 0.29 | 0.73 | 0.00 | 0.35 | 0.03 | 0.00 | 0.18 |
| Avail Cap(c_a), veh/h | 244 | 1119 | 550 | 390 | 1534 | 841 | 473 | 0 | 507 | 306 | 0 | 273 |
| HCM Platoon Ratio | 1.00 | 1.00 | 1.00 | 1.00 | 1.00 | 1.00 | 1.00 | 1.00 | 1.00 | 1.00 | 1.00 | 1.00 |
| Upstream Filter(I) | 1.00 | 1.00 | 1.00 | 1.00 | 1.00 | 1.00 | 1.00 | 0.00 | 1.00 | 1.00 | 0.00 | 1.00 |
| Uniform Delay (d), s/veh | 33.8 | 21.8 | 21.8 | 28.6 | 10.9 | 10.9 | 29.8 | 0.0 | 17.3 | 24.1 | 0.0 | 24.6 |
| Incr Delay (d2), s/veh | 22.7 | 15.0 | 24.8 | 7.0 | 0.1 | 0.2 | 3.8 | 0.0 | 1.9 | 0.2 | 0.0 | 1.4 |
| Initial Q Delay(d3),s/veh | 0.0 | 0.0 | 0.0 | 0.0 | 0.0 | 0.0 | 0.0 | 0.0 | 0.0 | 0.0 | 0.0 | 0.0 |
| %ile BackOfQ(50%),veh/ln | 0.4 | 12.0 | 13.3 | 4.1 | 2.5 | 2.8 | 2.6 | 0.0 | 2.8 | 0.2 | 0.0 | 0.9 |
| LnGrp Delay(d),s/veh | 56.4 | 36.8 | 46.6 | 35.6 | 11.0 | 11.1 | 33.6 | 0.0 | 19.2 | 24.3 | 0.0 | 26.1 |
| LnGrp LOS | E | D | D | D | B | B | C | | B | C | | C |
| Approach Vol, veh/h | | 1586 | | | 884 | | | 434 | | | 59 | |
| Approach Delay, s/veh | | 40.2 | | | 16.6 | | | 27.7 | | | 25.8 | |
| Approach LOS | | D | | | B | | | C | | | C | |

| Timer | 1 | 2 | 3 | 4 | 5 | 6 | 7 | 8 |
|---|---|---|---|---|---|---|---|---|
| Assigned Phs | | 2 | 3 | 4 | 5 | 6 | 7 | 8 |
| Phs Duration (G+Y+Rc), s | | 27.0 | 13.9 | 28.0 | 11.5 | 15.5 | 5.0 | 36.9 |
| Change Period (Y+Rc), s | | 4.0 | 4.0 | 4.0 | 4.0 | 4.0 | 4.0 | 4.0 |
| Max Green Setting (Gmax), s | | 23.0 | 16.0 | 24.0 | 10.0 | 9.0 | 10.0 | 30.0 |
| Max Q Clear Time (g_c+I1), s | | 8.0 | 9.9 | 23.9 | 7.3 | 3.8 | 2.6 | 7.8 |
| Green Ext Time (p_c), s | | 0.9 | 0.3 | 0.1 | 0.2 | 0.1 | 0.0 | 4.5 |

| Intersection Summary | |
|---|---|
| HCM 2010 Ctrl Delay | 31.0 |
| HCM 2010 LOS | C |

Notes

User approved pedestrian interval to be less than phase max green.

| Movement | EBL | EBT | EBR | WBL | WBT | WBR | NBL | NBT | NBR | SBL | SBT | SBR |
|---|---|---|---|---|---|---|---|---|---|---|---|---|
| Lane Configurations | | | | | | | | | | | | |
| Traffic Volume (veh/h) | 142 | 688 | 196 | 49 | 730 | 76 | 250 | 42 | 51 | 157 | 26 | 151 |
| Future Volume (veh/h) | 142 | 688 | 196 | 49 | 730 | 76 | 250 | 42 | 51 | 157 | 26 | 151 |
| Number | 7 | 4 | 14 | 3 | 8 | 18 | 5 | 2 | 12 | 1 | 6 | 16 |
| Initial Q (Qb), veh | 0 | 0 | 0 | 0 | 0 | 0 | 0 | 0 | 0 | 0 | 0 | 0 |
| Ped-Bike Adj(A_pbT) | 1.00 | | 1.00 | 1.00 | | 1.00 | 1.00 | | 1.00 | 1.00 | | 1.00 |
| Parking Bus, Adj | 1.00 | 1.00 | 1.00 | 1.00 | 1.00 | 1.00 | 1.00 | 1.00 | 1.00 | 1.00 | 1.00 | 1.00 |
| Adj Sat Flow, veh/h/ln | 1765 | 1765 | 1800 | 1765 | 1765 | 1800 | 1765 | 1765 | 1800 | 1765 | 1765 | 1800 |
| Adj Flow Rate, veh/h | 154 | 748 | 213 | 53 | 793 | 83 | 272 | 46 | 55 | 171 | 28 | 164 |
| Adj No. of Lanes | 1 | 2 | 0 | 1 | 2 | 0 | 1 | 1 | 0 | 1 | 1 | 0 |
| Peak Hour Factor | 0.92 | 0.92 | 0.92 | 0.92 | 0.92 | 0.92 | 0.92 | 0.92 | 0.92 | 0.92 | 0.92 | 0.92 |
| Percent Heavy Veh, % | 2 | 2 | 2 | 2 | 2 | 2 | 2 | 2 | 2 | 2 | 2 | 2 |
| Cap, veh/h | 191 | 967 | 275 | 70 | 930 | 97 | 440 | 252 | 301 | 530 | 77 | 450 |
| Arrive On Green | 0.15 | 0.50 | 0.50 | 0.04 | 0.30 | 0.30 | 0.34 | 0.34 | 0.34 | 0.34 | 0.34 | 0.34 |
| Sat Flow, veh/h | 1681 | 2578 | 734 | 1681 | 3064 | 321 | 1186 | 733 | 877 | 1288 | 224 | 1310 |
| Grp Volume(v), veh/h | 154 | 486 | 475 | 53 | 434 | 442 | 272 | 0 | 101 | 171 | 0 | 192 |
| Grp Sat Flow(s),veh/h/ln | 1681 | 1676 | 1635 | 1681 | 1676 | 1708 | 1186 | 0 | 1610 | 1288 | 0 | 1534 |
| Q Serve(g_s), s | 4.4 | 11.8 | 11.8 | 1.6 | 12.2 | 12.2 | 11.2 | 0.0 | 2.2 | 5.4 | 0.0 | 4.7 |
| Cycle Q Clear(g_c), s | 4.4 | 11.8 | 11.8 | 1.6 | 12.2 | 12.2 | 15.9 | 0.0 | 2.2 | 7.6 | 0.0 | 4.7 |
| Prop In Lane | 1.00 | | 0.45 | 1.00 | | 0.19 | 1.00 | | 0.54 | 1.00 | | 0.85 |
| Lane Grp Cap(c), veh/h | 191 | 629 | 613 | 70 | 509 | 518 | 440 | 0 | 552 | 530 | 0 | 526 |
| V/C Ratio(X) | 0.81 | 0.77 | 0.77 | 0.76 | 0.85 | 0.85 | 0.62 | 0.00 | 0.18 | 0.32 | 0.00 | 0.36 |
| Avail Cap(c_a), veh/h | 202 | 629 | 613 | 134 | 536 | 547 | 440 | 0 | 552 | 530 | 0 | 526 |
| HCM Platoon Ratio | 1.33 | 1.33 | 1.33 | 1.00 | 1.00 | 1.00 | 1.00 | 1.00 | 1.00 | 1.00 | 1.00 | 1.00 |
| Upstream Filter(I) | 0.82 | 0.82 | 0.82 | 0.64 | 0.64 | 0.64 | 1.00 | 0.00 | 1.00 | 1.00 | 0.00 | 1.00 |
| Uniform Delay (d), s/veh | 20.7 | 10.8 | 10.8 | 23.7 | 16.4 | 16.4 | 18.3 | 0.0 | 11.5 | 14.2 | 0.0 | 12.3 |
| Incr Delay (d2), s/veh | 17.0 | 4.9 | 5.0 | 10.1 | 8.1 | 8.0 | 6.4 | 0.0 | 0.7 | 1.6 | 0.0 | 2.0 |
| Initial Q Delay(d3),s/veh | 0.0 | 0.0 | 0.0 | 0.0 | 0.0 | 0.0 | 0.0 | 0.0 | 0.0 | 0.0 | 0.0 | 0.0 |
| %ile BackOfQ(50%),veh/ln | 2.9 | 6.2 | 6.0 | 0.9 | 6.7 | 6.8 | 4.4 | 0.0 | 1.1 | 2.1 | 0.0 | 2.3 |
| LnGrp Delay(d),s/veh | 37.7 | 15.7 | 15.8 | 33.8 | 24.5 | 24.4 | 24.7 | 0.0 | 12.2 | 15.8 | 0.0 | 14.3 |
| LnGrp LOS | D | B | B | C | C | C | C | | B | B | | B |
| Approach Vol, veh/h | | 1115 | | | 929 | | | 373 | | | 363 | |
| Approach Delay, s/veh | | 18.8 | | | 25.0 | | | 21.3 | | | 15.0 | |
| Approach LOS | | B | | | C | | | C | | | B | |

| Timer | 1 | 2 | 3 | 4 | 5 | 6 | 7 | 8 |
|---|---|---|---|---|---|---|---|---|
| Assigned Phs | | 2 | 3 | 4 | | 6 | 7 | 8 |
| Phs Duration (G+Y+Rc), s | | 21.2 | 6.1 | 22.8 | | 21.2 | 9.7 | 19.2 |
| Change Period (Y+Rc), s | | 4.0 | 4.0 | 4.0 | | 4.0 | 4.0 | 4.0 |
| Max Green Setting (Gmax), s | | 16.0 | 4.0 | 18.0 | | 16.0 | 6.0 | 16.0 |
| Max Q Clear Time (g_c+I1), s | | 17.9 | 3.6 | 13.8 | | 9.6 | 6.4 | 14.2 |
| Green Ext Time (p_c), s | | 0.0 | 0.0 | 2.3 | | 0.9 | 0.0 | 1.0 |

| Intersection Summary | |
|---|---|
| HCM 2010 Ctrl Delay | 20.7 |
| HCM 2010 LOS | C |

| Movement | EBL | EBT | EBR | WBL | WBT | WBR | NBL | NBT | NBR | SBL | SBT | SBR |
|---|---|---|---|---|---|---|---|---|---|---|---|---|
| Lane Configurations | | | | | | | | | | | | |
| Traffic Volume (veh/h) | 159 | 1292 | 312 | 100 | 710 | 52 | 281 | 39 | 84 | 115 | 28 | 174 |
| Future Volume (veh/h) | 159 | 1292 | 312 | 100 | 710 | 52 | 281 | 39 | 84 | 115 | 28 | 174 |
| Number | 7 | 4 | 14 | 3 | 8 | 18 | 5 | 2 | 12 | 1 | 6 | 16 |
| Initial Q (Qb), veh | 0 | 0 | 0 | 0 | 0 | 0 | 0 | 0 | 0 | 0 | 0 | 0 |
| Ped-Bike Adj(A_pbT) | 1.00 | | 1.00 | 1.00 | | 1.00 | 1.00 | | 1.00 | 1.00 | | 1.00 |
| Parking Bus, Adj | 1.00 | 1.00 | 1.00 | 1.00 | 1.00 | 1.00 | 1.00 | 1.00 | 1.00 | 1.00 | 1.00 | 1.00 |
| Adj Sat Flow, veh/h/ln | 1765 | 1765 | 1800 | 1765 | 1765 | 1800 | 1765 | 1765 | 1800 | 1765 | 1765 | 1800 |
| Adj Flow Rate, veh/h | 173 | 1404 | 339 | 109 | 772 | 57 | 305 | 42 | 91 | 125 | 30 | 189 |
| Adj No. of Lanes | 1 | 2 | 0 | 1 | 2 | 0 | 1 | 1 | 0 | 1 | 1 | 0 |
| Peak Hour Factor | 0.92 | 0.92 | 0.92 | 0.92 | 0.92 | 0.92 | 0.92 | 0.92 | 0.92 | 0.92 | 0.92 | 0.92 |
| Percent Heavy Veh, % | 2 | 2 | 2 | 2 | 2 | 2 | 2 | 2 | 2 | 2 | 2 | 2 |
| Cap, veh/h | 201 | 1415 | 333 | 134 | 1534 | 113 | 293 | 142 | 309 | 374 | 60 | 379 |
| Arrive On Green | 0.24 | 1.00 | 1.00 | 0.08 | 0.48 | 0.48 | 0.29 | 0.29 | 0.29 | 0.29 | 0.29 | 0.29 |
| Sat Flow, veh/h | 1681 | 2695 | 635 | 1681 | 3166 | 234 | 1157 | 497 | 1077 | 1252 | 210 | 1322 |
| Grp Volume(v), veh/h | 173 | 860 | 883 | 109 | 409 | 420 | 305 | 0 | 133 | 125 | 0 | 219 |
| Grp Sat Flow(s),veh/h/ln | 1681 | 1676 | 1653 | 1681 | 1676 | 1723 | 1157 | 0 | 1575 | 1252 | 0 | 1531 |
| Q Serve(g_s), s | 10.8 | 0.0 | 57.4 | 7.0 | 18.3 | 18.3 | 21.6 | 0.0 | 7.2 | 9.2 | 0.0 | 13.1 |
| Cycle Q Clear(g_c), s | 10.8 | 0.0 | 57.4 | 7.0 | 18.3 | 18.3 | 31.5 | 0.0 | 7.2 | 13.6 | 0.0 | 13.1 |
| Prop In Lane | 1.00 | | 0.38 | 1.00 | | 0.14 | 1.00 | | 0.68 | 1.00 | | 0.86 |
| Lane Grp Cap(c), veh/h | 201 | 880 | 868 | 134 | 812 | 835 | 293 | 0 | 451 | 374 | 0 | 439 |
| V/C Ratio(X) | 0.86 | 0.98 | 1.02 | 0.82 | 0.50 | 0.50 | 1.04 | 0.00 | 0.29 | 0.33 | 0.00 | 0.50 |
| Avail Cap(c_a), veh/h | 458 | 930 | 917 | 168 | 812 | 835 | 293 | 0 | 451 | 374 | 0 | 439 |
| HCM Platoon Ratio | 2.00 | 2.00 | 2.00 | 1.00 | 1.00 | 1.00 | 1.00 | 1.00 | 1.00 | 1.00 | 1.00 | 1.00 |
| Upstream Filter(I) | 0.52 | 0.52 | 0.52 | 0.87 | 0.87 | 0.87 | 1.00 | 0.00 | 1.00 | 1.00 | 0.00 | 1.00 |
| Uniform Delay (d), s/veh | 40.9 | 0.0 | 0.0 | 49.8 | 19.3 | 19.3 | 46.6 | 0.0 | 30.6 | 34.7 | 0.0 | 32.7 |
| Incr Delay (d2), s/veh | 5.7 | 15.9 | 26.0 | 19.1 | 0.4 | 0.4 | 63.8 | 0.0 | 1.7 | 2.4 | 0.0 | 4.0 |
| Initial Q Delay(d3),s/veh | 0.0 | 0.0 | 0.0 | 0.0 | 0.0 | 0.0 | 0.0 | 0.0 | 0.0 | 0.0 | 0.0 | 0.0 |
| %ile BackOfQ(50%),veh/ln | 5.3 | 3.9 | 6.3 | 4.0 | 8.5 | 8.7 | 14.1 | 0.0 | 3.3 | 3.4 | 0.0 | 6.0 |
| LnGrp Delay(d),s/veh | 46.6 | 15.9 | 26.0 | 68.9 | 19.8 | 19.7 | 110.4 | 0.0 | 32.2 | 37.1 | 0.0 | 36.7 |
| LnGrp LOS | D | B | F | E | B | B | F | | C | D | | D |
| Approach Vol, veh/h | | 1916 | | | 938 | | | 438 | | | 344 | |
| Approach Delay, s/veh | | 23.3 | | | 25.5 | | | 86.7 | | | 36.8 | |
| Approach LOS | | C | | | C | | | F | | | D | |

| Timer | 1 | 2 | 3 | 4 | 5 | 6 | 7 | 8 |
|---|---|---|---|---|---|---|---|---|
| Assigned Phs | | 2 | 3 | 4 | | 6 | 7 | 8 |
| Phs Duration (G+Y+Rc), s | | 34.0 | 12.7 | 63.3 | | 34.0 | 17.2 | 58.8 |
| Change Period (Y+Rc), s | | 4.0 | 4.0 | 4.0 | | 4.0 | 4.0 | 4.0 |
| Max Green Setting (Gmax), s | | 26.0 | 11.0 | 61.0 | | 26.0 | 30.0 | 42.0 |
| Max Q Clear Time (g_c+I1), s | | 33.5 | 9.0 | 59.4 | | 15.6 | 12.8 | 20.3 |
| Green Ext Time (p_c), s | | 0.0 | 0.0 | 1.4 | | 1.3 | 0.4 | 5.5 |

| Intersection Summary | |
|---|---|
| HCM 2010 Ctrl Delay | 32.8 |
| HCM 2010 LOS | C |

Notes

User approved pedestrian interval to be less than phase max green.

# HCM 2010 Signalized Intersection Summary
## 150: Yucaipa Blvd & Knollhaven Lane

12/20/2018

| Movement | EBL | EBT | EBR | WBL | WBT | WBR | NBL | NBT | NBR | SBL | SBT | SBR |
|---|---|---|---|---|---|---|---|---|---|---|---|---|
| Lane Configurations | | | | | | | | | | | | |
| Traffic Volume (veh/h) | 10 | 517 | 217 | 181 | 659 | 4 | 265 | 16 | 164 | 1 | 17 | 7 |
| Future Volume (veh/h) | 10 | 517 | 217 | 181 | 659 | 4 | 265 | 16 | 164 | 1 | 17 | 7 |
| Number | 7 | 4 | 14 | 3 | 8 | 18 | 5 | 2 | 12 | 1 | 6 | 16 |
| Initial Q (Qb), veh | 0 | 0 | 0 | 0 | 0 | 0 | 0 | 0 | 0 | 0 | 0 | 0 |
| Ped-Bike Adj(A_pbT) | 1.00 | | 1.00 | 1.00 | | 1.00 | 1.00 | | 1.00 | 1.00 | | 1.00 |
| Parking Bus, Adj | 1.00 | 1.00 | 1.00 | 1.00 | 1.00 | 1.00 | 1.00 | 1.00 | 1.00 | 1.00 | 1.00 | 1.00 |
| Adj Sat Flow, veh/h/ln | 1765 | 1765 | 1800 | 1765 | 1765 | 1800 | 1765 | 1765 | 1800 | 1765 | 1765 | 1800 |
| Adj Flow Rate, veh/h | 11 | 562 | 236 | 197 | 716 | 4 | 288 | 17 | 178 | 1 | 18 | 8 |
| Adj No. of Lanes | 1 | 3 | 0 | 1 | 3 | 0 | 2 | 1 | 0 | 1 | 1 | 0 |
| Peak Hour Factor | 0.92 | 0.92 | 0.92 | 0.92 | 0.92 | 0.92 | 0.92 | 0.92 | 0.92 | 0.92 | 0.92 | 0.92 |
| Percent Heavy Veh, % | 2 | 2 | 2 | 2 | 2 | 2 | 2 | 2 | 2 | 2 | 2 | 2 |
| Cap, veh/h | 19 | 783 | 320 | 205 | 1700 | 9 | 284 | 58 | 605 | 455 | 323 | 144 |
| Arrive On Green | 0.01 | 0.23 | 0.23 | 0.12 | 0.34 | 0.34 | 0.09 | 0.44 | 0.44 | 0.28 | 0.28 | 0.28 |
| Sat Flow, veh/h | 1681 | 3361 | 1373 | 1681 | 4944 | 28 | 3261 | 133 | 1387 | 1183 | 1159 | 515 |
| Grp Volume(v), veh/h | 11 | 536 | 262 | 197 | 465 | 255 | 288 | 0 | 195 | 1 | 0 | 26 |
| Grp Sat Flow(s),veh/h/ln | 1681 | 1606 | 1522 | 1681 | 1606 | 1760 | 1630 | 0 | 1520 | 1183 | 0 | 1674 |
| Q Serve(g_s), s | 0.4 | 8.8 | 9.1 | 6.7 | 6.4 | 6.4 | 5.0 | 0.0 | 4.8 | 0.0 | 0.0 | 0.7 |
| Cycle Q Clear(g_c), s | 0.4 | 8.8 | 9.1 | 6.7 | 6.4 | 6.4 | 5.0 | 0.0 | 4.8 | 0.0 | 0.0 | 0.7 |
| Prop In Lane | 1.00 | | 0.90 | 1.00 | | 0.02 | 1.00 | | 0.91 | 1.00 | | 0.31 |
| Lane Grp Cap(c), veh/h | 19 | 748 | 355 | 205 | 1104 | 605 | 284 | 0 | 662 | 455 | 0 | 467 |
| V/C Ratio(X) | 0.58 | 0.72 | 0.74 | 0.96 | 0.42 | 0.42 | 1.01 | 0.00 | 0.29 | 0.00 | 0.00 | 0.06 |
| Avail Cap(c_a), veh/h | 117 | 896 | 425 | 205 | 1104 | 605 | 284 | 0 | 662 | 455 | 0 | 467 |
| HCM Platoon Ratio | 1.00 | 1.00 | 1.00 | 1.00 | 1.00 | 1.00 | 1.00 | 1.00 | 1.00 | 1.00 | 1.00 | 1.00 |
| Upstream Filter(I) | 1.00 | 1.00 | 1.00 | 1.00 | 1.00 | 1.00 | 1.00 | 0.00 | 1.00 | 1.00 | 0.00 | 1.00 |
| Uniform Delay (d), s/veh | 28.2 | 20.3 | 20.4 | 25.0 | 14.4 | 14.4 | 26.2 | 0.0 | 10.5 | 14.9 | 0.0 | 15.2 |
| Incr Delay (d2), s/veh | 25.5 | 2.2 | 5.4 | 51.5 | 0.3 | 0.5 | 56.9 | 0.0 | 1.1 | 0.0 | 0.0 | 0.2 |
| Initial Q Delay(d3),s/veh | 0.0 | 0.0 | 0.0 | 0.0 | 0.0 | 0.0 | 0.1 | 0.0 | 0.0 | 0.0 | 0.0 | 0.0 |
| %ile BackOfQ(50%),veh/ln | 0.3 | 4.1 | 4.3 | 6.0 | 2.8 | 3.1 | 4.5 | 0.0 | 2.2 | 0.0 | 0.0 | 0.3 |
| LnGrp Delay(d),s/veh | 53.7 | 22.5 | 25.8 | 76.5 | 14.7 | 14.9 | 83.1 | 0.0 | 11.6 | 14.9 | 0.0 | 15.4 |
| LnGrp LOS | D | C | C | E | B | B | F | | B | B | | B |
| Approach Vol, veh/h | | 809 | | | 917 | | | 483 | | | 27 | |
| Approach Delay, s/veh | | 24.0 | | | 28.0 | | | 54.3 | | | 15.4 | |
| Approach LOS | | C | | | C | | | D | | | B | |

| Timer | 1 | 2 | 3 | 4 | 5 | 6 | 7 | 8 |
|---|---|---|---|---|---|---|---|---|
| Assigned Phs | | 2 | 3 | 4 | 5 | 6 | 7 | 8 |
| Phs Duration (G+Y+Rc), s | | 29.0 | 11.0 | 17.4 | 9.0 | 20.0 | 4.6 | 23.7 |
| Change Period (Y+Rc), s | | 4.0 | 4.0 | 4.0 | 4.0 | 4.0 | 4.0 | 4.0 |
| Max Green Setting (Gmax), s | | 25.0 | 7.0 | 16.0 | 5.0 | 16.0 | 4.0 | 19.0 |
| Max Q Clear Time (g_c+I1), s | | 6.8 | 8.7 | 11.1 | 7.0 | 2.7 | 2.4 | 8.4 |
| Green Ext Time (p_c), s | | 1.1 | 0.0 | 2.2 | 0.0 | 0.0 | 0.0 | 3.4 |

| Intersection Summary | |
|---|---|
| HCM 2010 Ctrl Delay | 32.1 |
| HCM 2010 LOS | C |

# HCM 2010 Signalized Intersection Summary
## 150: Yucaipa Blvd & Knollhaven Lane

12/20/2018

| Movement | EBL | EBT | EBR | WBL | WBT | WBR | NBL | NBT | NBR | SBL | SBT | SBR |
|---|---|---|---|---|---|---|---|---|---|---|---|---|
| Lane Configurations | | | | | | | | | | | | |
| Traffic Volume (veh/h) | 14 | 1175 | 316 | 182 | 653 | 3 | 237 | 14 | 148 | 10 | 24 | 22 |
| Future Volume (veh/h) | 14 | 1175 | 316 | 182 | 653 | 3 | 237 | 14 | 148 | 10 | 24 | 22 |
| Number | 7 | 4 | 14 | 3 | 8 | 18 | 5 | 2 | 12 | 1 | 6 | 16 |
| Initial Q (Qb), veh | 0 | 0 | 0 | 0 | 0 | 0 | 0 | 0 | 0 | 0 | 0 | 0 |
| Ped-Bike Adj(A_pbT) | 1.00 | | 1.00 | 1.00 | | 1.00 | 1.00 | | 1.00 | 1.00 | | 1.00 |
| Parking Bus, Adj | 1.00 | 1.00 | 1.00 | 1.00 | 1.00 | 1.00 | 1.00 | 1.00 | 1.00 | 1.00 | 1.00 | 1.00 |
| Adj Sat Flow, veh/h/ln | 1765 | 1765 | 1800 | 1765 | 1765 | 1800 | 1765 | 1765 | 1800 | 1765 | 1765 | 1800 |
| Adj Flow Rate, veh/h | 15 | 1277 | 343 | 198 | 710 | 3 | 258 | 15 | 161 | 11 | 26 | 24 |
| Adj No. of Lanes | 1 | 3 | 0 | 1 | 3 | 0 | 2 | 1 | 0 | 1 | 1 | 0 |
| Peak Hour Factor | 0.92 | 0.92 | 0.92 | 0.92 | 0.92 | 0.92 | 0.92 | 0.92 | 0.92 | 0.92 | 0.92 | 0.92 |
| Percent Heavy Veh, % | 2 | 2 | 2 | 2 | 2 | 2 | 2 | 2 | 2 | 2 | 2 | 2 |
| Cap, veh/h | 24 | 1261 | 338 | 224 | 2240 | 9 | 304 | 48 | 519 | 369 | 192 | 177 |
| Arrive On Green | 0.01 | 0.33 | 0.33 | 0.13 | 0.45 | 0.45 | 0.09 | 0.37 | 0.37 | 0.23 | 0.23 | 0.23 |
| Sat Flow, veh/h | 1681 | 3782 | 1015 | 1681 | 4952 | 21 | 3261 | 129 | 1390 | 1204 | 846 | 781 |
| Grp Volume(v), veh/h | 15 | 1084 | 536 | 198 | 460 | 253 | 258 | 0 | 176 | 11 | 0 | 50 |
| Grp Sat Flow(s),veh/h/ln | 1681 | 1606 | 1586 | 1681 | 1606 | 1761 | 1630 | 0 | 1519 | 1204 | 0 | 1627 |
| Q Serve(g_s), s | 0.7 | 25.0 | 25.0 | 8.7 | 6.9 | 6.9 | 5.8 | 0.0 | 6.2 | 0.5 | 0.0 | 1.8 |
| Cycle Q Clear(g_c), s | 0.7 | 25.0 | 25.0 | 8.7 | 6.9 | 6.9 | 5.8 | 0.0 | 6.2 | 0.5 | 0.0 | 1.8 |
| Prop In Lane | 1.00 | | 0.64 | 1.00 | | 0.01 | 1.00 | | 0.91 | 1.00 | | 0.48 |
| Lane Grp Cap(c), veh/h | 24 | 1071 | 529 | 224 | 1453 | 797 | 304 | 0 | 567 | 369 | 0 | 369 |
| V/C Ratio(X) | 0.62 | 1.01 | 1.01 | 0.88 | 0.32 | 0.32 | 0.85 | 0.00 | 0.31 | 0.03 | 0.00 | 0.14 |
| Avail Cap(c_a), veh/h | 90 | 1071 | 529 | 224 | 1453 | 797 | 304 | 0 | 567 | 369 | 0 | 369 |
| HCM Platoon Ratio | 1.00 | 1.00 | 1.00 | 1.00 | 1.00 | 1.00 | 1.00 | 1.00 | 1.00 | 1.00 | 1.00 | 1.00 |
| Upstream Filter(I) | 0.09 | 0.09 | 0.09 | 1.00 | 1.00 | 1.00 | 1.00 | 0.00 | 1.00 | 1.00 | 0.00 | 1.00 |
| Uniform Delay (d), s/veh | 36.8 | 25.0 | 25.0 | 31.9 | 13.1 | 13.1 | 33.5 | 0.0 | 16.7 | 22.6 | 0.0 | 23.1 |
| Incr Delay (d2), s/veh | 2.4 | 11.6 | 15.4 | 31.2 | 0.1 | 0.2 | 19.5 | 0.0 | 1.4 | 0.1 | 0.0 | 0.8 |
| Initial Q Delay(d3),s/veh | 0.0 | 0.0 | 0.0 | 0.0 | 0.0 | 0.0 | 0.0 | 0.0 | 0.0 | 0.0 | 0.0 | 0.0 |
| %ile BackOfQ(50%),veh/ln | 0.3 | 12.7 | 13.1 | 6.0 | 3.0 | 3.3 | 3.4 | 0.0 | 2.8 | 0.2 | 0.0 | 0.9 |
| LnGrp Delay(d),s/veh | 39.1 | 36.6 | 40.4 | 63.2 | 13.3 | 13.4 | 53.0 | 0.0 | 18.1 | 22.8 | 0.0 | 23.9 |
| LnGrp LOS | D | F | F | E | B | B | D | | B | C | | C |
| Approach Vol, veh/h | | 1635 | | | 911 | | | 434 | | | 61 | |
| Approach Delay, s/veh | | 37.9 | | | 24.1 | | | 38.8 | | | 23.7 | |
| Approach LOS | | D | | | C | | | D | | | C | |

| Timer | 1 | 2 | 3 | 4 | 5 | 6 | 7 | 8 |
|---|---|---|---|---|---|---|---|---|
| Assigned Phs | | 2 | 3 | 4 | 5 | 6 | 7 | 8 |
| Phs Duration (G+Y+Rc), s | | 32.0 | 14.0 | 29.0 | 11.0 | 21.0 | 5.1 | 37.9 |
| Change Period (Y+Rc), s | | 4.0 | 4.0 | 4.0 | 4.0 | 4.0 | 4.0 | 4.0 |
| Max Green Setting (Gmax), s | | 28.0 | 10.0 | 25.0 | 7.0 | 17.0 | 4.0 | 31.0 |
| Max Q Clear Time (g_c+I1), s | | 8.2 | 10.7 | 27.0 | 7.8 | 3.8 | 2.7 | 8.9 |
| Green Ext Time (p_c), s | | 1.0 | 0.0 | 0.0 | 0.0 | 0.2 | 0.0 | 4.7 |

| Intersection Summary | |
|---|---|
| HCM 2010 Ctrl Delay | 33.6 |
| HCM 2010 LOS | C |

| Movement | EBL | EBT | EBR | WBL | WBT | WBR | NBL | NBT | NBR | SBL | SBT | SBR |
|---|---|---|---|---|---|---|---|---|---|---|---|---|
| Lane Configurations | | | | | | | | | | | | |
| Traffic Volume (veh/h) | 146 | 703 | 199 | 49 | 755 | 78 | 259 | 43 | 52 | 161 | 27 | 156 |
| Future Volume (veh/h) | 146 | 703 | 199 | 49 | 755 | 78 | 259 | 43 | 52 | 161 | 27 | 156 |
| Number | 7 | 4 | 14 | 3 | 8 | 18 | 5 | 2 | 12 | 1 | 6 | 16 |
| Initial Q (Qb), veh | 0 | 0 | 0 | 0 | 0 | 0 | 0 | 0 | 0 | 0 | 0 | 0 |
| Ped-Bike Adj(A_pbT) | 1.00 | | 1.00 | 1.00 | | 1.00 | 1.00 | | 1.00 | 1.00 | | 1.00 |
| Parking Bus, Adj | 1.00 | 1.00 | 1.00 | 1.00 | 1.00 | 1.00 | 1.00 | 1.00 | 1.00 | 1.00 | 1.00 | 1.00 |
| Adj Sat Flow, veh/h/ln | 1765 | 1765 | 1800 | 1765 | 1765 | 1765 | 1765 | 1765 | 1800 | 1765 | 1765 | 1800 |
| Adj Flow Rate, veh/h | 159 | 764 | 216 | 53 | 821 | 85 | 282 | 47 | 57 | 175 | 29 | 170 |
| Adj No. of Lanes | 1 | 2 | 0 | 1 | 3 | 1 | 1 | 1 | 0 | 1 | 1 | 0 |
| Peak Hour Factor | 0.92 | 0.92 | 0.92 | 0.92 | 0.92 | 0.92 | 0.92 | 0.92 | 0.92 | 0.92 | 0.92 | 0.92 |
| Percent Heavy Veh, % | 2 | 2 | 2 | 2 | 2 | 2 | 2 | 2 | 2 | 2 | 2 | 2 |
| Cap, veh/h | 198 | 885 | 250 | 68 | 1277 | 398 | 495 | 290 | 352 | 590 | 89 | 523 |
| Arrive On Green | 0.12 | 0.34 | 0.34 | 0.04 | 0.27 | 0.27 | 0.40 | 0.40 | 0.40 | 0.40 | 0.40 | 0.40 |
| Sat Flow, veh/h | 1681 | 2582 | 730 | 1681 | 4818 | 1500 | 1179 | 727 | 882 | 1285 | 223 | 1310 |
| Grp Volume(v), veh/h | 159 | 496 | 484 | 53 | 821 | 85 | 282 | 0 | 104 | 175 | 0 | 199 |
| Grp Sat Flow(s),veh/h/ln | 1681 | 1676 | 1636 | 1681 | 1606 | 1500 | 1179 | 0 | 1609 | 1285 | 0 | 1534 |
| Q Serve(g_s), s | 5.1 | 15.2 | 15.2 | 1.7 | 8.3 | 2.4 | 11.9 | 0.0 | 2.3 | 5.6 | 0.0 | 4.9 |
| Cycle Q Clear(g_c), s | 5.1 | 15.2 | 15.2 | 1.7 | 8.3 | 2.4 | 16.9 | 0.0 | 2.3 | 7.9 | 0.0 | 4.9 |
| Prop In Lane | 1.00 | | 0.45 | 1.00 | | 1.00 | 1.00 | | 0.55 | 1.00 | | 0.85 |
| Lane Grp Cap(c), veh/h | 198 | 574 | 560 | 68 | 1277 | 398 | 495 | 0 | 642 | 590 | 0 | 612 |
| V/C Ratio(X) | 0.80 | 0.86 | 0.86 | 0.78 | 0.64 | 0.21 | 0.57 | 0.00 | 0.16 | 0.30 | 0.00 | 0.33 |
| Avail Cap(c_a), veh/h | 244 | 610 | 595 | 122 | 1401 | 436 | 495 | 0 | 642 | 590 | 0 | 612 |
| HCM Platoon Ratio | 1.00 | 1.00 | 1.00 | 1.00 | 1.00 | 1.00 | 1.00 | 1.00 | 1.00 | 1.00 | 1.00 | 1.00 |
| Upstream Filter(I) | 0.82 | 0.82 | 0.82 | 0.80 | 0.80 | 0.80 | 1.00 | 0.00 | 1.00 | 1.00 | 0.00 | 1.00 |
| Uniform Delay (d), s/veh | 23.6 | 16.9 | 16.9 | 26.1 | 17.9 | 15.7 | 17.2 | 0.0 | 10.6 | 13.1 | 0.0 | 11.4 |
| Incr Delay (d2), s/veh | 12.1 | 9.9 | 10.1 | 14.4 | 0.7 | 0.2 | 4.7 | 0.0 | 0.5 | 1.3 | 0.0 | 1.4 |
| Initial Q Delay(d3),s/veh | 0.0 | 0.0 | 0.0 | 0.0 | 0.0 | 0.0 | 0.0 | 0.0 | 0.0 | 0.0 | 0.0 | 0.0 |
| %ile BackOfQ(50%),veh/ln | 3.0 | 8.5 | 8.3 | 1.1 | 3.7 | 1.0 | 4.5 | 0.0 | 1.1 | 2.2 | 0.0 | 2.3 |
| LnGrp Delay(d),s/veh | 35.7 | 26.8 | 27.0 | 40.5 | 18.6 | 16.0 | 21.9 | 0.0 | 11.2 | 14.4 | 0.0 | 12.8 |
| LnGrp LOS | D | C | C | D | B | B | C | | B | B | | B |
| Approach Vol, veh/h | | 1139 | | | 959 | | | 386 | | | 374 | |
| Approach Delay, s/veh | | 28.1 | | | 19.6 | | | 19.0 | | | 13.6 | |
| Approach LOS | | C | | | B | | | B | | | B | |

| Timer | 1 | 2 | 3 | 4 | 5 | 6 | 7 | 8 |
|---|---|---|---|---|---|---|---|---|
| Assigned Phs | | 2 | 3 | 4 | | 6 | 7 | 8 |
| Phs Duration (G+Y+Rc), s | | 25.9 | 6.2 | 22.8 | | 25.9 | 10.5 | 18.6 |
| Change Period (Y+Rc), s | | 4.0 | 4.0 | 4.0 | | 4.0 | 4.0 | 4.0 |
| Max Green Setting (Gmax), s | | 19.0 | 4.0 | 20.0 | | 19.0 | 8.0 | 16.0 |
| Max Q Clear Time (g_c+I1), s | | 18.9 | 3.7 | 17.2 | | 9.9 | 7.1 | 10.3 |
| Green Ext Time (p_c), s | | 0.0 | 0.0 | 1.6 | | 1.2 | 0.0 | 2.8 |

| Intersection Summary | |
|---|---|
| HCM 2010 Ctrl Delay | 22.1 |
| HCM 2010 LOS | C |

| Movement | EBL | EBT | EBR | WBL | WBT | WBR | NBL | NBT | NBR | SBL | SBT | SBR |
|---|---|---|---|---|---|---|---|---|---|---|---|---|
| Lane Configurations | | | | | | | | | | | | |
| Traffic Volume (veh/h) | 164 | 1330 | 323 | 102 | 731 | 53 | 289 | 40 | 86 | 118 | 29 | 179 |
| Future Volume (veh/h) | 164 | 1330 | 323 | 102 | 731 | 53 | 289 | 40 | 86 | 118 | 29 | 179 |
| Number | 7 | 4 | 14 | 3 | 8 | 18 | 5 | 2 | 12 | 1 | 6 | 16 |
| Initial Q (Qb), veh | 0 | 0 | 0 | 0 | 0 | 0 | 0 | 0 | 0 | 0 | 0 | 0 |
| Ped-Bike Adj(A_pbT) | 1.00 | | 1.00 | 1.00 | | 1.00 | 1.00 | | 1.00 | 1.00 | | 1.00 |
| Parking Bus, Adj | 1.00 | 1.00 | 1.00 | 1.00 | 1.00 | 1.00 | 1.00 | 1.00 | 1.00 | 1.00 | 1.00 | 1.00 |
| Adj Sat Flow, veh/h/ln | 1765 | 1765 | 1800 | 1765 | 1765 | 1765 | 1765 | 1765 | 1800 | 1765 | 1765 | 1800 |
| Adj Flow Rate, veh/h | 178 | 1446 | 351 | 111 | 795 | 58 | 314 | 43 | 93 | 128 | 32 | 195 |
| Adj No. of Lanes | 1 | 2 | 0 | 1 | 3 | 1 | 1 | 1 | 0 | 1 | 1 | 0 |
| Peak Hour Factor | 0.92 | 0.92 | 0.92 | 0.92 | 0.92 | 0.92 | 0.92 | 0.92 | 0.92 | 0.92 | 0.92 | 0.92 |
| Percent Heavy Veh, % | 2 | 2 | 2 | 2 | 2 | 2 | 2 | 2 | 2 | 2 | 2 | 2 |
| Cap, veh/h | 210 | 1320 | 311 | 118 | 2095 | 652 | 304 | 159 | 345 | 391 | 69 | 421 |
| Arrive On Green | 0.13 | 0.49 | 0.49 | 0.07 | 0.43 | 0.43 | 0.32 | 0.32 | 0.32 | 0.32 | 0.32 | 0.32 |
| Sat Flow, veh/h | 1681 | 2694 | 635 | 1681 | 4818 | 1500 | 1149 | 498 | 1077 | 1248 | 216 | 1316 |
| Grp Volume(v), veh/h | 178 | 884 | 913 | 111 | 795 | 58 | 314 | 0 | 136 | 128 | 0 | 227 |
| Grp Sat Flow(s),veh/h/ln | 1681 | 1676 | 1653 | 1681 | 1606 | 1500 | 1149 | 0 | 1575 | 1248 | 0 | 1532 |
| Q Serve(g_s), s | 10.4 | 49.0 | 49.0 | 6.6 | 11.2 | 2.3 | 20.2 | 0.0 | 6.4 | 8.5 | 0.0 | 11.8 |
| Cycle Q Clear(g_c), s | 10.4 | 49.0 | 49.0 | 6.6 | 11.2 | 2.3 | 32.0 | 0.0 | 6.4 | 14.9 | 0.0 | 11.8 |
| Prop In Lane | 1.00 | | 0.38 | 1.00 | | 1.00 | 1.00 | | 0.68 | 1.00 | | 0.86 |
| Lane Grp Cap(c), veh/h | 210 | 821 | 810 | 118 | 2095 | 652 | 304 | 0 | 504 | 391 | 0 | 490 |
| V/C Ratio(X) | 0.85 | 1.08 | 1.13 | 0.94 | 0.38 | 0.09 | 1.03 | 0.00 | 0.27 | 0.33 | 0.00 | 0.46 |
| Avail Cap(c_a), veh/h | 319 | 821 | 810 | 118 | 2095 | 652 | 304 | 0 | 504 | 391 | 0 | 490 |
| HCM Platoon Ratio | 1.00 | 1.00 | 1.00 | 1.00 | 1.00 | 1.00 | 1.00 | 1.00 | 1.00 | 1.00 | 1.00 | 1.00 |
| Upstream Filter(I) | 0.55 | 0.55 | 0.55 | 0.82 | 0.82 | 0.82 | 1.00 | 0.00 | 1.00 | 1.00 | 0.00 | 1.00 |
| Uniform Delay (d), s/veh | 42.8 | 25.5 | 25.5 | 46.3 | 19.1 | 16.6 | 42.3 | 0.0 | 25.3 | 30.9 | 0.0 | 27.1 |
| Incr Delay (d2), s/veh | 7.2 | 46.7 | 66.7 | 58.2 | 0.1 | 0.0 | 60.6 | 0.0 | 1.3 | 2.2 | 0.0 | 3.1 |
| Initial Q Delay(d3),s/veh | 0.0 | 0.0 | 0.0 | 0.0 | 0.0 | 0.0 | 0.0 | 0.0 | 0.0 | 0.0 | 0.0 | 0.0 |
| %ile BackOfQ(50%),veh/ln | 5.2 | 33.3 | 37.3 | 5.0 | 5.0 | 0.9 | 13.5 | 0.0 | 3.0 | 3.2 | 0.0 | 5.4 |
| LnGrp Delay(d),s/veh | 49.9 | 72.2 | 92.2 | 104.5 | 19.2 | 16.7 | 102.9 | 0.0 | 26.6 | 33.1 | 0.0 | 30.3 |
| LnGrp LOS | D | F | F | F | B | B | F | | C | C | | C |
| Approach Vol, veh/h | | 1975 | | | 964 | | | 450 | | | 355 | |
| Approach Delay, s/veh | | 79.4 | | | 28.9 | | | 79.8 | | | 31.3 | |
| Approach LOS | | E | | | C | | | E | | | C | |

| Timer | 1 | 2 | 3 | 4 | 5 | 6 | 7 | 8 |
|---|---|---|---|---|---|---|---|---|
| Assigned Phs | | 2 | 3 | 4 | | 6 | 7 | 8 |
| Phs Duration (G+Y+Rc), s | | 36.0 | 11.0 | 53.0 | | 36.0 | 16.5 | 47.5 |
| Change Period (Y+Rc), s | | 4.0 | 4.0 | 4.0 | | 4.0 | 4.0 | 4.0 |
| Max Green Setting (Gmax), s | | 32.0 | 7.0 | 49.0 | | 32.0 | 19.0 | 37.0 |
| Max Q Clear Time (g_c+I1), s | | 34.0 | 8.6 | 51.0 | | 16.9 | 12.4 | 13.2 |
| Green Ext Time (p_c), s | | 0.0 | 0.0 | 0.0 | | 1.6 | 0.2 | 6.1 |

| Intersection Summary | |
|---|---|
| HCM 2010 Ctrl Delay | 61.9 |
| HCM 2010 LOS | E |

Notes

User approved pedestrian interval to be less than phase max green.

# Appendix F: Yucaipa Boulevard Widening Project Plan

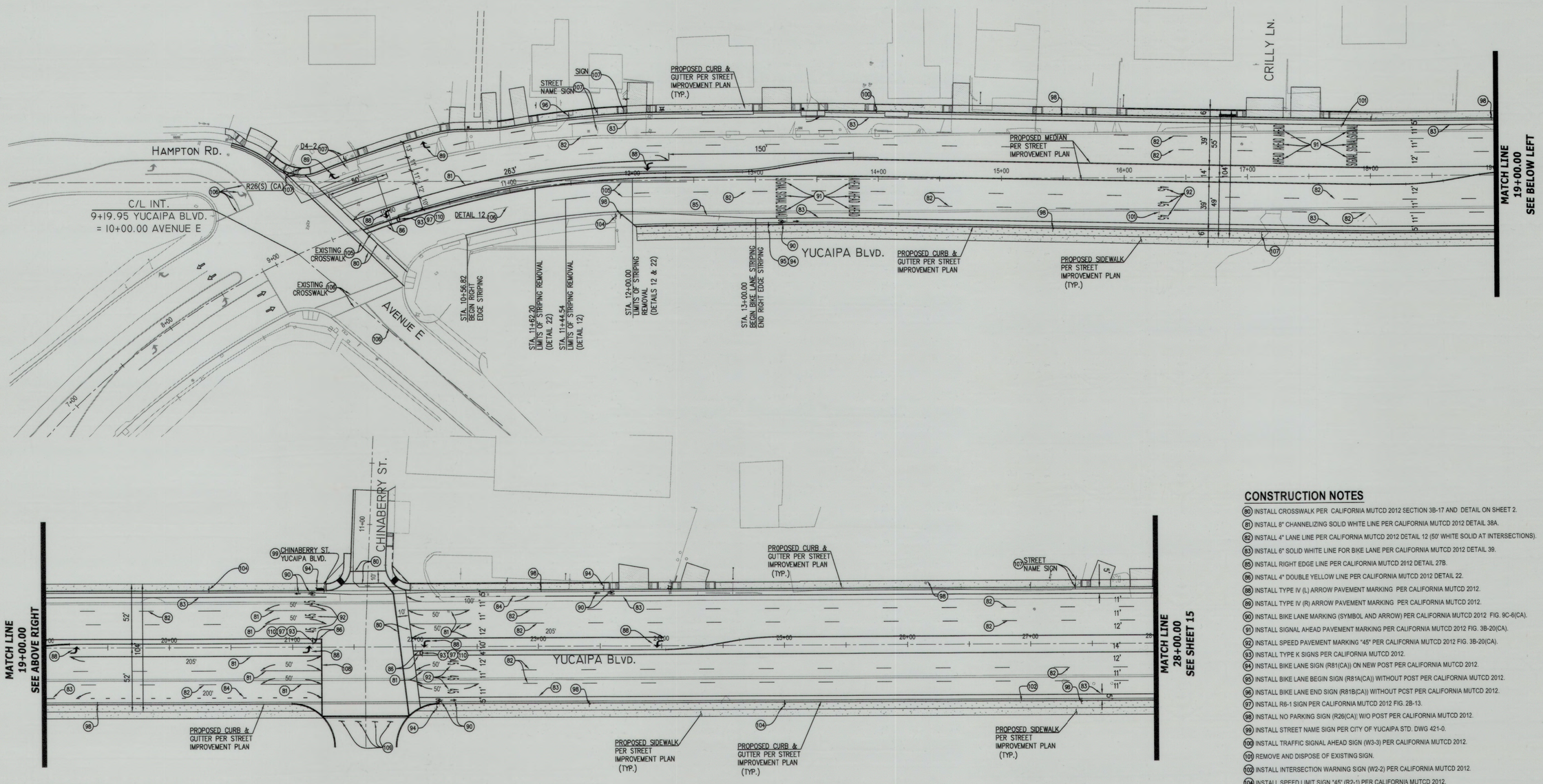


## CONSTRUCTION NOTES

80 INSTALL CROSSWALK PER CALIFORNIA MUTCD 2012 SECTION 3B-17 AND DETAIL ON SHEET 2.
81 INSTALL 8" CHANNELIZING SOLID WHITE LINE PER CALIFORNIA MUTCD 2012 DETAIL 38A.
82 INSTALL 4" LANE LINE PER CALIFORNIA MUTCD 2012 DETAIL 12 (50' WHITE SOLID AT INTERSECTIONS).
83 INSTALL 6" SOLID WHITE LINE FOR BIKE LANE PER CALIFORNIA MUTCD 2012 DETAIL 39.
85 INSTALL RIGHT EDGE LINE PER CALIFORNIA MUTCD 2012 DETAIL 27B.
86 INSTALL 4" DOUBLE YELLOW LINE PER CALIFORNIA MUTCD 2012 DETAIL 22.
88 INSTALL TYPE IV (L) ARROW PAVEMENT MARKING PER CALIFORNIA MUTCD 2012.
89 INSTALL TYPE IV (R) ARROW PAVEMENT MARKING PER CALIFORNIA MUTCD 2012.
90 INSTALL BIKE LANE MARKING (SYMBOL AND ARROW) PER CALIFORNIA MUTCD 2012 FIG. 9C-6(CA).
91 INSTALL SIGNAL AHEAD PAVEMENT MARKING PER CALIFORNIA MUTCD 2012 FIG. 3B-20(CA).
92 INSTALL SPEED PAVEMENT MARKING "45" PER CALIFORNIA MUTCD 2012 FIG. 3B-20(CA).
93 INSTALL TYPE K SIGNS PER CALIFORNIA MUTCD 2012.
94 INSTALL BIKE LANE SIGN (R81(CA)) ON NEW POST PER CALIFORNIA MUTCD 2012.
95 INSTALL BIKE LANE BEGIN SIGN (R81A(CA)) WITHOUT POST PER CALIFORNIA MUTCD 2012.
96 INSTALL BIKE LANE END SIGN (R81B(CA)) WITHOUT POST PER CALIFORNIA MUTCD 2012.
97 INSTALL R6-1 SIGN PER CALIFORNIA MUTCD 2012 FIG. 2B-13.
98 INSTALL NO PARKING SIGN (R26(CA)) W/O POST PER CALIFORNIA MUTCD 2012.
99 INSTALL STREET NAME SIGN PER CITY OF YUCAIPA STD. DWG 421-0.
100 INSTALL TRAFFIC SIGNAL AHEAD SIGN (W3-3) PER CALIFORNIA MUTCD 2012.
101 REMOVE AND DISPOSE OF EXISTING SIGN.
102 INSTALL INTERSECTION WARNING SIGN (W2-2) PER CALIFORNIA MUTCD 2012.
104 INSTALL SPEED LIMIT SIGN "45" (R2-1) PER CALIFORNIA MUTCD 2012.
105 REMOVE EXISTING STRIPING/ MARKING.
106 PROTECT IN PLACE EXISTING MARKING AND STRIPING.
107 RELOCATE EXISTING SIGN.
108 INSTALL 12" WIDE SOLID WHITE LINE PER CALIFORNIA MUTCD 2012 SECTION 3B.16.
109 INSTALL TYPE 4 OBJECT MARKER, OM4-1, PER CALIFORNIA MUTCD 2012 FIG. 2C-13
110 INSTALL R4-7 SIGN PER CALIFORNIA MUTCD 2012 FIG. 2B-10.

## TRAFFIC SIGNING AND STRIPING GENERAL NOTES:

1. TRAFFIC STRIPING, PAVEMENT LEGENDS AND RAISED PAVEMENT MARKERS SHALL BE INSTALLED IN ACCORDANCE WITH THE LATEST VERSION OF THE CALIFORNIA (MUTCD) MANUAL AND CALTRANS STANDARDS PLANS AND STANDARD SPECIFICATIONS SECTION 84 AND 85, MAY 2006.
2. REFLECTORIZE ALL TRAFFIC STRIPES, PAVEMENT LEGENDS AND PAVEMENT MARKINGS. PAVEMENT LEGENDS AND MARKINGS SHALL MATCH CITY STENCILS. ALL DETAILS REFER TO CALTRANS STANDARD PLANS A20-A THROUGH A-20D AND A-24A THROUGH A-24E.
3. ALL STRIPING AND PAVEMENT MARKINGS SHALL BE THERMOPLASTIC PER CITY STANDARD SPECIFICATIONS. SKIP LINES SHALL BE APPLIED BY EXTRUSION METHOD ONLY.
4. ALL CONFLICTING LINES, MARKINGS AND RAISED PAVEMENT MARKERS SHALL BE REMOVED BY WET SANDBLASTING OR METHOD APPROVED BY THE CITY ENGINEER.
5. THE CONTRACTOR SHALL OBTAIN APPROVAL FROM THE CITY ENGINEER FOR "CAT TRACKING" PRIOR TO FINAL INSTALLATION.
6. ALL REMOVED SIGNS AND POST IN GOOD CONDITION SHALL BE SALVAGED AND DELIVERED TO THE CITY YARD.
7. ALL SIGNS SHALL BE NEW (OTHER THAN THOSE SHOWN TO BE RELOCATED). ALL NEW AND RELOCATED SIGNS SHALL BE MOUNTED ON NEW POSTS WITH NEW HARDWARE UNLESS NOTED OTHERWISE. SIGNS DESIGNED FOR INSTALLATION OF EXISTING STREET LIGHT POLES SHALL BE MOUNTED WITH NEW HARDWARE.
8. TRAFFIC SIGNS DIMENSIONS, COLORS AND LETTERING SHALL CONFORM TO THE LATEST CALIFORNIA MUTCD SPECIFICATIONS. SIGN CODES SHOWN HEREON ARE TO CONFORM TO CALIFORNIA MUTCD SPECIFICATIONS. TRAFFIC SIGN SIZE SHALL BE STANDARD UNLESS OTHERWISE SHOWN ON THE PLANS. ALL SIGNS ARE TO BE REFLECTIVE.
9. NEW SIGN POST SHALL BE 12 GAGE GALVANIZED STEEL, PERFORATED 4 SIDES, EASY ERECT BREAKAWAY BASE, "UNI-STRUT" OR APPROVED EQUAL. SIGNS SHALL BE MOUNTED ON STREET LIGHT POLES WHENEVER FEASIBLE.
10. IT SHALL BE THE RESPONSIBILITY OF THE CONTRACTOR TO BE FAMILIARIZED WITH THE JOB SITE AND THE LOCATION OF ALL UNDERGROUND FACILITIES SHOWN OR NOT SHOWN ON THESE PLANS.

## NOTE:

- ALL COMMERCIAL AND BUSINESS SIGNS TO BE REMOVED OR RELOCATED PER STREET IMPROVEMENT PLANS.
- EXISTING STRIPING TO BE REMOVED UNLESS NOTED OTHERWISE ON PLANS.
- EXISTING SIGNS TO BE REMOVED AND DISPOSED UNLESS NOTED ON THE PLANS TO BE RELOCATED OR PROTECTED IN PLACE.

40' 0 40' 80' 120'

SCALE: 1" = 40'

# PHASE I

PROJECT # : 10771

RECOMMENDED FOR APPROVAL BY: Margaret Monson 4/2/15 DATE: 4/2/15

APPROVED BY: DATE: 4/2/15

FERMIN PRECIADO, CITY ENGINEER

CITY OF YUCAIPA PUBLIC WORKS DEPARTMENT ENGINEERING DIVISION

CITY OF YUCAIPA

YUCAIPA BOULEVARD
SIGNING & STRIPING
19+00.00 - 28+00.00

JOB No. 09001

Drawing No.

Sheet 14 of 20

DIGALERT — DIAL BEFORE YOU DIG — TWO WORKING DAYS BEFORE YOU BEGIN — CALL TOLL FREE 800-227-2600 — A PUBLIC SERVICE BY UNDERGROUND SERVICE ALERT

APD CONSULTANTS, INC.
PLANNING . ENGINEERING . CONSTRUCTION MANAGEMENT
188 Technology Dr., Suite B, IRVINE, CA 92618
TEL: (949) 336-6336 FAX: (949) 336-6338 www.apdcon.com

Rabih Mahmoud, P.E. R.C.E. 60421 — 03/25/15 DATE

REGISTERED PROFESSIONAL ENGINEER — RABIH F. MAHMOUD — 60421 EXPIRES 6/30/16 — CIVIL — STATE OF CALIFORNIA

PLANS PREPARED FOR :

THE CITY OF YUCAIPA
34272 YUCAIPA BOULEVARD
YUCAIPA, CA 92399-9950
CONTACT PERSON: FERMIN PRECIADO
CITY ENGINEER
(909) 797-2489

DESIGNED BY: V.B.
DRAWN BY: C.R.
CHECKED BY: R.M.

| Date | By | REVISIONS | App'd |
|---|---|---|---|
| 4/2015 | MM | 2 REVISED PER PRIVATE CONSTRUCTION PLANS INCL. IN CONTRACT. | |
| 4/2015 | MM | 1 REVISED PHASE I LIMITS. | |

BENCH MARK
BEING A 2" BRASS DISK STAMPED "SAN BERNARDINO COUNTY SURVEYOR BENCH MARK NO. 1-24, 1969".
ELEVATION: 2112.379 FEET
LOCATED ON THE EAST SIDE OF AN INLET BOX, 1.5 FT. NORTH OF THE SOUTH EDGE, 28 FT. NORTH OF CENTERLINE OF SAND CANYON ROAD (YUCAIPA BLVD. EXTENDED), 300 FT. EAST OF 16TH STREET, ON SAND CANYON TURNOFF.

Scale: 0 1 2 3

Drawing Name: P:\2009\09001 Yucaipa Blvd\Eng\Mar\09001ph1-14x09+38.53-28+00.00.dwg
Last Opened: Mar 25, 2015 - 9:17am by Robbem