APPENDIX J.
TRAFFIC IMPACT ANALYSIS

This page intentionally left blank

Draft Traffic Impact Analysis Report

Wilson Creek Estates
City of Yucaipa, CA

Prepared for

City of Yucaipa

AECOM Project No. 60437867.4
January 2016

999 Town and County Road, Suite 300
Orange, CA 92868

Page Intentionally Left Blank

TABLE OF CONTENTS

SECTION PAGE

1.0 INTRODUCTION 1
- 1.1 Study Purpose 1
- 1.2 Study Area and Project Background 1
- 1.3 Report Organization 4

2.0 ANALYSIS METHODOLOGY 5
- 2.1 Intersection Analysis 5
- 2.2 Roadway Segment Analysis 7
- 2.3 Level of Service Standards 8
- 2.4 Determination of Significant Impacts 8

3.0 EXISTING CONDITIONS 9
- 3.1 Existing Roadway Network 9
- 3.2 Study Intersections and Roadway Segments 10
- 3.3 Existing Traffic Volume 12
- 3.4 Existing Level of Service Analysis 12
  - 3.4.1 Intersection Analysis 12
  - 3.4.2 Roadway Segment Analysis 13

4.0 PROJECT DESCRIPTION 16
- 4.1 Project Description 16
  - 4.1.1 Project Site Access 16
  - 4.1.2 Planned Roadway Improvements 16
  - 4.1.3 Project Trip Generation 16
  - 4.1.4 Project Trip Distribution 17

5.0 EXISTING WITH PROJECT TRAFFIC CONDITIONS 20
  - 5.1.1 Intersection Analysis 20
  - 5.1.2 Roadway Segment Analysis 21

6.0 LONG TERM (2040) TRAFFIC CONDITIONS 25
- 6.1 Long Term (2040) No Build Conditions Analysis 25
  - 6.1.1 Intersection Analysis 25
  - 6.1.2 Roadway Segment Analysis 26
- 6.2 Long Term (2040) Build Conditions Analysis 29
  - 6.2.1 Intersection Analysis 29
  - 6.2.2 Roadway Segment Analysis 30
- 6.3 Analysis With Seasonal Adjustment 31

7.0 FINDINGS AND RECOMMENDATIONS 36
- 7.1 Intersection Analysis Summary 36
- 7.2 Roadway Segment Analysis Summary 38
- 7.3 Conclusion & Recommendations 40

List of Tables

Table 1 Level of Service Descriptions 6
Table 2 Level of Service for Roadway Segments 7
Table 3 Daily Roadway Capacities 7
Table 4 Study Intersections 11
Table 5 Study Roadway Segments 11
Table 6 Peak Hour Intersection Analysis Results Existing Condition 12
Table 7 Roadway Segment Analysis Results Existing Conditions 13
Table 8 Project Trip Generation Estimates 17
Table 9 Peak Hour Intersection Analysis Results Existing With Project Traffic Conditions 21
Table 10 Roadway Segment Analysis Results Existing With Project Traffic Conditions 22
Table 11 Peak Hour Intersection Analysis Results 2040 No Build (No Project) Traffic Conditions 26
Table 12 Roadway Segment Analysis Results 2040 No Build (No Project) Traffic Conditions 27
Table 13 Peak Hour Intersection Analysis Results 2040 Build (With Project) Traffic Conditions 29
Table 14 Roadway Segment Analysis Results 2040 Build (With Project) Traffic Conditions 30
Table 15 Intersection Peak Hour Level of Service Results with Seasonal Adjustment 32
Table 16 Summary of Roadway Segment Level of Service Results 33
Table 17 Summary of Intersection Peak Hour Level of Service Results 37
Table 18 Summary of Roadway Segment Level of Service Results 39

List of Figures

Figure 1: Regional Vicinity Map 2
Figure 2: Project Study Area 3
Figure 3: Existing Intersection Geometrics 14
Figure 4: Existing Traffic Volume 15
Figure 5: Project Site Plan 18
Figure 6: Project Added Trips 19
Figure 7: Existing With Project Traffic Volumes 23
Figure 8: Existing With Project Lane Geometry 24
Figure 9: 2040 No Build (No Project) Traffic Volumes 28
Figure 10: 2040 Build (With Project) Traffic Volumes 34
Figure 11: 2040Lane Geometry With Project 35

Appendices

Appendix A
Traffic Counts
Appendix B
Intersection LOS Worksheets
Existing Conditions
Appendix C
Intersection LOS Worksheets
Existing Plus Conditions
Appendix D
Intersection LOS Worksheets
Long Term (2040) No Build (No Project) Conditions
Appendix E
Intersection LOS Worksheets
Long Term (2040) Build (With Project) Conditions

Appendix F

Intersection LOS Worksheets
With Seasonal Adjustment

1.0 INTRODUCTION

1.1 STUDY PURPOSE

The purpose of this study is to analyze traffic impacts associated with the development of the proposed Wilson Creek Estates residential improvement project ("Proposed Project" or "Project") and recommend mitigation measures to reduce those impacts to levels of less than significant. This study was prepared in consultation with City of Yucaipa Engineering and Planning Departments.

The analysis focuses on the potential traffic impacts to the surrounding roadway circulation system and the development of mitigation measures at impacted locations.

1.2 STUDY AREA AND PROJECT BACKGROUND

The Wilson Creek Estates Project is located north of Oak Glen Road and east of Jefferson Street, near the intersection of Oak Glen Road and Pendleton Road in the City of Yucaipa, California. The surrounding area is mostly open with the exception of few existing single family/farm houses that are located on the south/west corner of the site. **Figure 1** shows the project vicinity map in context to the regional circulation system. **Figure 2** shows the project study area. The project site is bounded by Oak Glen Road on the south; Jefferson St on the west; Fir Ave (future) on the north; and vacant land on the east.

The Wilson Creek Estates Project will include 184 single family residential units upon completion. A detailed description of the Project is presented in section 4.0.

The following scenarios were analyzed as a part of this study:

- Existing Conditions – utilized to establish the current level of traffic operating conditions within the study area.
- Existing Plus Project Conditions – represents existing traffic conditions plus the addition of projected trip generation associated with the Wilson Creek Estates Project.
- Long Term Year (2040) No Build (No Project) Conditions – establishes a long term traffic operating baseline developed from the 2035 SBTAM loaded model against which traffic generated by the Wilson Creek Estates Project was compared.
- Long Term Year (2040) Build (With Project) Conditions – represents long term baseline traffic conditions with the addition of projected trip generation associated with the Wilson Creek Estates Project.

The traffic analyses prepared for this study was performed in accordance with discussions and consultation with the City of Yucaipa Engineering and Planning Departments.

Figure 1: Regional Vicinity Map

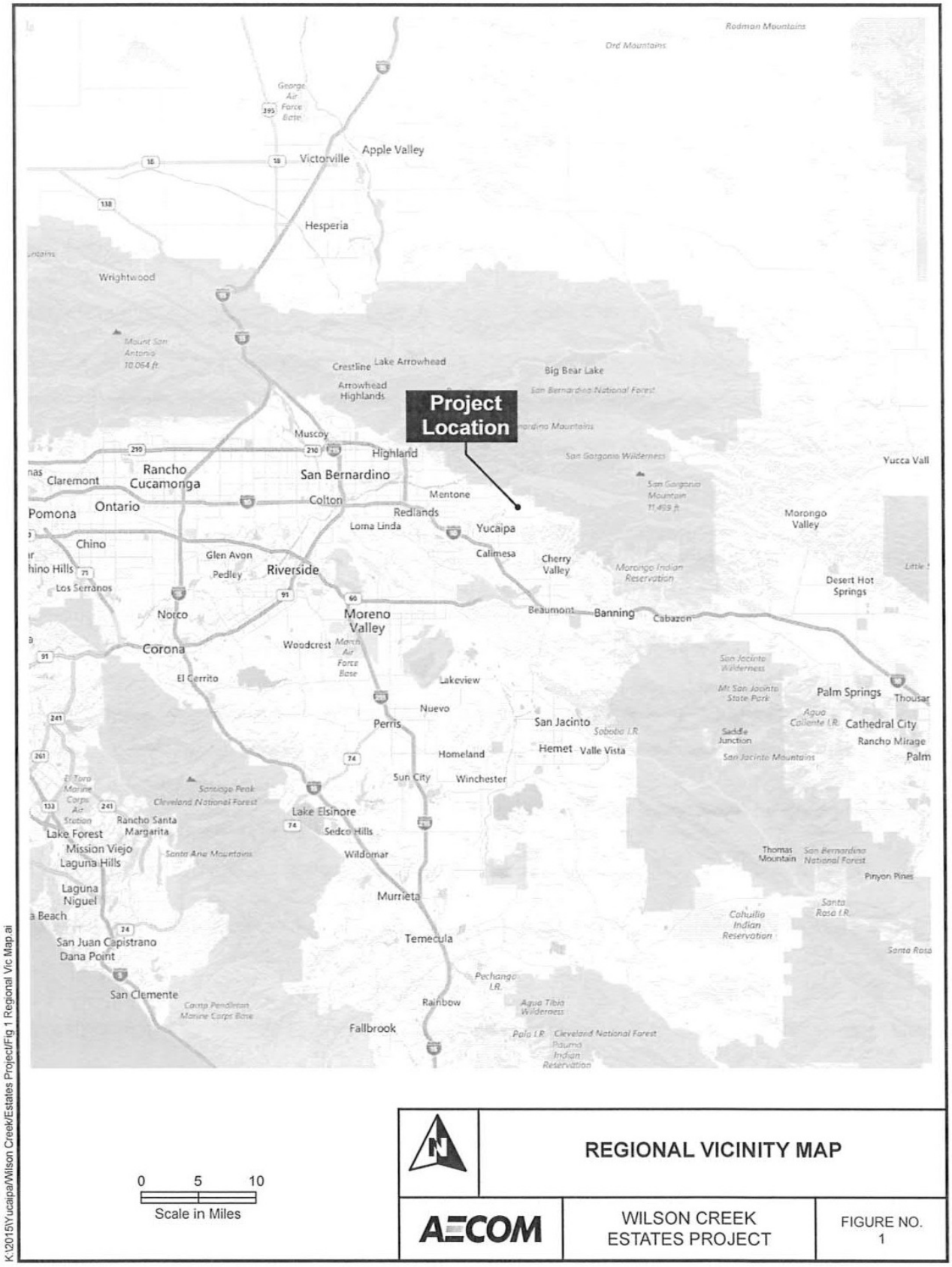

Figure 2: Project Study Area

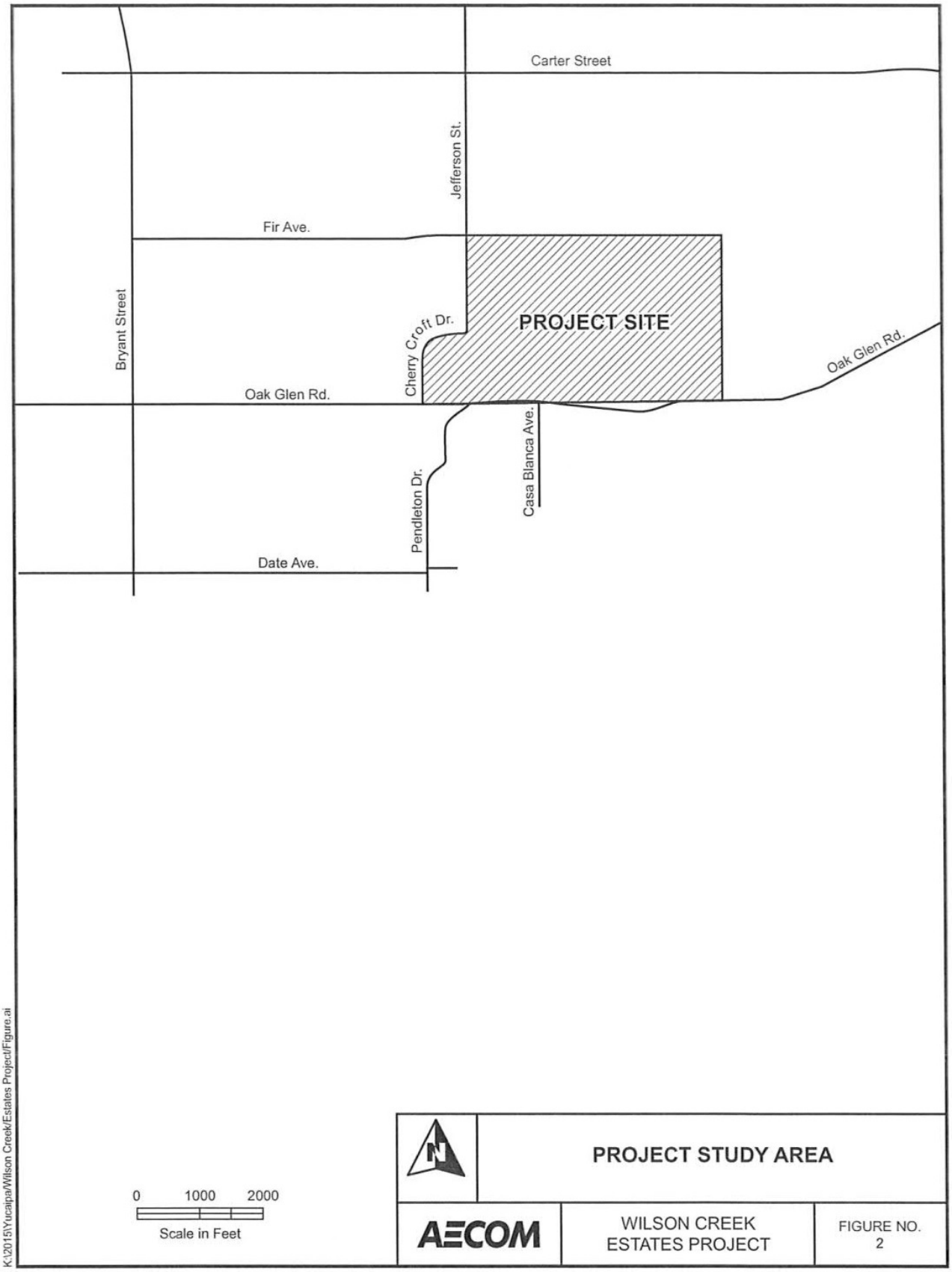

1.3 REPORT ORGANIZATION

Following this Introduction chapter, this report is organized into the following sections:

2.0 **Analysis Methodology** – This chapter describes the methodologies and standards utilized to analyze roadway and intersection traffic conditions.

3.0 **Existing Conditions –** This chapter describes the existing traffic network within the study area and provides analysis results for existing traffic conditions.

4.0 **Project Description –** This chapter describes the proposed project including project traffic generation, trip distribution patterns and project trip assignment.

5.0 **Existing Plus Project Traffic Conditions –** This chapter describes existing plus project traffic conditions. Analysis results are provided for the existing with Project traffic conditions.

6.0 **Long Term (2040) Traffic Conditions –** This chapter describes future No Build (No Project) and Build (With Project) conditions. Analysis results are provided for the Long Term (2040) No Build (No Project) conditions as well Long Term (2040) Build (With Project) conditions.

7.0 **Findings and Recommendations –** Outlines overall study findings and recommendations, if any.

2.0 ANALYSIS METHODOLOGY

The traffic analyses prepared for this study were performed in accordance with discussions and consultation with the City of Yucaipa Engineering and Planning Departments and followed the traffic impact analysis guidelines established by the City of Yucaipa. Detailed information on intersection analysis methodologies, standards, and thresholds are discussed in the following sections.

2.1 INTERSECTION ANALYSIS

Analysis of signalized and unsignalized intersections was performed using the Highway capacity Manual (HCM) 2000 methodology. The HCM 2000 methodology uses level of service concept for the analysis of intersections or roadway segments. Level of Service (LOS) is an indicator of operating conditions on a roadway or at an intersection and is defined in categories ranging from A to F with "A" representing the best traffic flow conditions and "F" representing poor conditions. LOS A indicates free-flowing traffic and LOS F indicates substantial congestion with stop-and-go traffic and long delays at intersections.

Table 1 provides definitions of level of service for both signalized and unsignalized intersections using the Highway Capacity Manual (HCM) 2000 analysis procedures. The computerized analysis of intersection operations was performed utilizing *Traffix7.6* analysis software, which uses the HCM 2000 methodology.

Table 1
Level of Service Descriptions

Level of Service	Description of Operation	Signalized Intersection Control Delay per Vehicle (s/veh)	Unsignalized Intersection Control Delay (s/veh)
A	*LOS A* describes operations with very low delay. This occurs when progression is extremely favorable, and most vehicles do not stop at all. Short cycle lengths may also contribute to low delay.	≤ 10	<10
B	*LOS B* describes operations with generally good progression and/or short cycle lengths. More vehicles stop than for LOS A, causing higher levels of average delay.	>10 - 20	>10 and <15
C	*LOS C* describes operations with higher delays, which may result from fair progression and/or longer cycle lengths. Individual cycle failures may begin to appear at this level. The number of vehicles stopping is significant at this level, although many still pass through the intersection without stopping.	>20 - 35	>15 and <25
D	*LOS D* describes operations with high delay, resulting from some combination of unfavorable progression, long cycle lengths, or high volumes. The influence of congestion becomes more noticeable, and individual cycle failures are noticeable.	>35 - 55	>25 and <35
E	*LOS E* is considered the limit of acceptable delay. Individual cycle failures are frequent occurrences.	>55 - 80	>35 and <50
F	*LOS F* describes a condition of excessively high delay, considered unacceptable to most drivers. This condition often occurs when arrival flow rates exceed the LOS D capacity of the intersection. Poor progression and long cycle lengths may also be major contributing causes to such delay.	>80	>50

2.2 ROADWAY SEGMENT ANALYSIS

Roadway segment analysis was performed using the roadway classifications and daily volume capacity table obtained from the City of Yucaipa general plan and Circulation Element.

Tables 2 and **3** show level of service (LOS) definitions and maximum daily volume thresholds for the main roadway classifications contained in the current City of Yucaipa general plan.

Table 2
Level of Service for Roadway Segments

Level of Service	Description of Operation	Volume to Capacity Ratio (v/c)
A	Excellent. Free flow, light volumes.	0.00 – 0.60
B	Very good. Free to stable flow, light to moderate volumes.	0.61 – 0.70
C	Good. Stable flow, moderate volumes, freedom to maneuver noticeably restricted.	0.71 – 0.80
D	Fair. Approaches unstable flow, moderate to high volumes, limited freedom to maneuver.	0.81 – 0.90
E	Poor. Extremely unstable flow, heavy volumes, maneuverability and psychological comfort extremely poor.	0.91 – 0.99
F	Fail. A condition of excessively high delay, considered unacceptable to most drivers.	> 1.0

Table 3
Daily Roadway Capacities

Facility Type	No of Lanes	LOS and Volume Thresholds				
		A	B	C	D	E
Major Highway	6 lanes, divided	35,400	41,300	47,200	53,100	59,000
Major Highway	4 lanes, divided	22,800	26,600	30,400	34,200	38,000
Secondary Highway	4 lanes, undivided	18,000	21,000	24,000	27,000	30,000
Controlled/Limited Access Collector Street	2 lanes, undivided	9,600	11,000	12,800	14,400	16,000
Mountain Major	2 lanes, undivided	9,600	11,000	12,800	14,400	16,000
Local Street	2 lanes, undivided	9,600	11,000	12,800	14,400	16,000
Source: City of Yucaipa General Plan, Mountain Major capacities assumed to be the same as local street.						

2.3 LEVEL OF SERVICE STANDARDS

Based on the City of Yucaipa's General Plan and Circulation Element, "The City will strive to meet LOS "C" as the standard of operation for the intersections and road segments that fall under its jurisdiction". As part of the general plan update, the City proposes that LOS "D" is allowed at intersections that include roundabouts and that present special conditions, such as right of way constraints, grades etc.

The San Bernardino Association of Governments (SANBAG) Congestion Management Program (CMP) includes guidelines for analyzing CMP monitored intersections and arterials. The minimum acceptable level of service for CMP designated intersection or roadway segment is LOS "E", as defined in the SANBAG CMP.

This traffic study makes every effort to identify improvements, for any impacted intersections or roadway segments, to meet the City's minimum LOS standard.

2.4 DETERMINATION OF SIGNIFICANT IMPACTS

The Proposed Project would result in a significant impact to traffic/circulation if the addition of traffic generated from the Proposed Project results in any of the following conditions:

- Cause a substantial increase in traffic compared to the existing traffic condition (i.e. result in substantial increase in delay or volume to capacity ratio);
- Exceed LOS standard established by the City of Yucaipa General Plan on designated intersections and roadways. City of Yucaipa's minimum acceptable LOS of C (LOS D for intersections with roundabouts) was used as standard for this study;
- Exceed LOS standard established by the SANBAG CMP on designated CMP intersections roads and highways. SANBAG CMP's minimum acceptable LOS of E was used as standard for this study;
- Triggers an intersection operating at an acceptable LOS without project traffic to operate at an unacceptable LOS with the addition of project traffic;
- Contributes additional project trips to an intersection or road segment that is or will operate at an unacceptable LOS without project traffic;
- Increases the average delay for a study intersection that is already operating at an unacceptable LOS.

3.0 EXISTING CONDITIONS

This section describes the existing study area roadway circulation system, key study intersections and roadways segments, existing daily roadway and peak hour intersection traffic volume information and LOS analysis results for existing conditions.

3.1 EXISTING ROADWAY NETWORK

Several regionally and locally significant roadways traverse the study area. Key characteristics of the roadway circulation system within the project study area are discussed below.

Bryant Street – Bryant Street is a major north/south arterial located approximately 1.0 mile west of the project site. Within the project study area, Bryant Street has two through lanes in each direction, and dedicated left turn lanes at major intersections. In addition, separate bike lane exists on both sides of the Bryant Street within the project study area. Section of Bryant Street between Date Street and Fir Avenue also contains a two way center turn lane. The current Average Daily Traffic on Bryant Street just north of Oak Glen Road is 12,964 vehicles per day and just south of Oak Glen Road is 12,529 vehicles per day. Currently posted speed limit on Bryant Street is 50 mph north of Oak Glen Road and 45 mph south of Oak Glen Road

Oak Glen Road – Oak Glen Road is an east/west oriented roadway located just south of the project site. Within the project study area, Oak Glen Road has one travel lane in each direction, dedicated left turn lanes at major intersections, and bike facilities on both sides of the Road. In addition, multi-purpose trail crossings exist on Oak Glen Road at Jefferson Street and also between Pendleton Road and Casa Blanca Avenue. Oak Glen Road is currently posted at 50 mph in the vicinity of the site. The current Average Daily Traffic (ADT) on Oak Glen Road just east of Bryant St is 4,302 vehicles per day and just west of Bryant St is 12,512 vehicles per day. In the vicinity of the project site, Oak Glen Road currently carries about 2,572 vehicles per day west of Casa Blanca Avenue and 1,907 vehicles per day east of Casa Blanca Avenue.

Fir Avenue – Fir Avenue is an east/west oriented roadway located west of the project site. Within the project study area, Fir Avenue has one travel lane in each direction. The intersection of Fir Avenue/Bryant Street is currently signalized. Fir Avenue is identified in City's General Plan to be extended to the east in the future to connect with the Jefferson Street. Fir Avenue, east of Freemont Street, currently carries about 336 vehicles per day.

Jefferson Street – Jefferson Street is a north/south oriented roadway and forms the western boundary of the project site. Currently Jefferson Street south of Carter Street is not improved or maintained by the City. The section of Jefferson Street, in the vicinity of the project site, is comprised of a dirt surface and only used by few residents and owners of the adjoining vacant parcels. The intersection of Carter Street/Jefferson Street is currently unsignalized and controlled by stop signs on Jefferson Street.

Carter Street – Carter Street is an east/west oriented roadway located approximately 0.5 mile north of the project site. Within the project study area, Carter Street has one travel lane in each direction with a posted speed limit of 35 mph.

Pendleton Road – Pendleton Road is a north/south oriented roadway located south of the project site. Pendleton Road has one travel lane in each direction and a posted speed limit of 25 mph. The intersection of Pendleton Road and Oak Glen Road is currently unsignalized and controlled by a stop sign on Pendleton Road. The current Average Daily Traffic on Pendleton Road just south of Oak Glen Road is 452 vehicles per day. The City is currently working on a flood control and traffic circulation project that will realign the intersection of Pendleton Road and Oak Glen Road.

Casa Blanca Avenue – Casa Blanca Avenue is a north/south oriented roadway located south of the project site and is not improved or maintained by the City. Casa Blanca Avenue has one travel lane in each direction and forms a T-intersection with Oak Glen Road. The intersection of Casa Blanca Avenue and Oak Glen Road is currently unsignalized and controlled by a stop sign on Casa Blanca Avenue.

Cherry Croft Drive – Cherry Croft Drive is a north/south oriented roadway located west of the project site. Cherry Croft Drive has one travel lane in each direction and forms a T-intersection with Oak Glen Road. The intersection of Cherry Croft Drive and Oak Glen Road is currently unsignalized and controlled by a stop sign on Cherry Croft Drive. The current Average Daily Traffic on Cherry Croft Drive just north of Oak Glen Road is 41 vehicles per day.

Date Street – Date Street is an east/west oriented roadway located south of the project site. Date Street has one travel lane in each direction and a posted speed limit of 25 mph. It forms a T-intersection with Pendleton Road. The intersection of Date Street and Pendleton Road is currently unsignalized and controlled by a stop sign on Date Street. The current Average Daily Traffic on Date Street just east of Bryant Street is 3,255 vehicles per day.

3.2 STUDY INTERSECTIONS AND ROADWAY SEGMENTS

In consultation with the City of Yucaipa, the existing key study area intersections shown in **Table 4** have been identified for analysis in the traffic study. It should be noted that, the future with project conditions analysis includes extra intersections not listed in **Table 4**. The existing intersection lane configurations are

shown in **Figure 3**. The roadway segments shown in **Table 5** were evaluated under the existing conditions.

Table 4
Study Intersections

ID	Intersection	Jurisdiction
1	Bryant Street/Oak Glen Road *	City of Yucaipa
2	Bryant Street/Fir Avenue	City of Yucaipa
3	Bryant Street/Carter Street	City of Yucaipa
4	Jefferson Street/Carter Street	City of Yucaipa
5	Oak Glen Road/Pendleton Road	City of Yucaipa
6	Oak Glen Road/Casa Blanca Avenue	City of Yucaipa
7	Oak Glen Road/Cherry Croft Drive	City of Yucaipa
8	Pendleton Road/Date Street	City of Yucaipa

Note:
** Indicates San Bernardino Association of Governments (SANBAG) Congestion Management - Program (CMP) Monitored Intersection.*

Table 5
Study Roadway Segments

ID	Roadway Segments	Jurisdiction
1	Bryant St – between Oak Glen Rd and Fir Ave*	City of Yucaipa
2	Bryant St – between Oak Glen Rd and Date St*	City of Yucaipa
3	Oak Glen Rd – between 2nd St and Bryant St*	City of Yucaipa
4	Oak Glen Rd – between Bryant St and Fremont Ave	City of Yucaipa
5	Oak Glen Rd – between Fremont Ave and Jefferson St	City of Yucaipa
6	Oak Glen Rd – between Jefferson St and Casa Blanca Ave	City of Yucaipa
7	Oak Glen Rd – east of Casa Blanca Ave	City of Yucaipa
8	Fir Ave – east of Fremont St	City of Yucaipa
9	Pendleton Rd – South of Oak Glen Rd	City of Yucaipa
10	Pendleton Rd – north of Date St	City of Yucaipa
11	Cherry Croft Dr – north of Oak Glen Rd	City of Yucaipa
12	Date St – east of Bryant St	City of Yucaipa
13	Jefferson St – south of Carter Street	City of Yucaipa

Note:
** Indicates San Bernardino Association of Governments (SANBAG) Congestion Management - Program (CMP) Monitored Roadway Segment.*

3.3 EXISTING TRAFFIC VOLUME

The traffic data collected for the traffic analysis included 7-9 AM and 4-6 PM peak hour turning movement counts and 24-hour Average Daily Traffic (ADT) counts conducted in October, 2015. **Figure 4** shows existing AM/PM peak hour traffic volumes for the existing study intersections. The existing count data are provided in **Appendix A**.

3.4 EXISTING LEVEL OF SERVICE ANALYSIS

LOS analyses under existing conditions were conducted using the methodologies described in Chapter 2.0. The roadway segment and intersection LOS analysis results are discussed below.

3.4.1 Intersection Analysis

Table 6 displays intersection LOS and delay results for the key study area intersections under Existing conditions. The detailed intersection LOS calculation worksheets for Existing conditions are provided in **Appendix B**.

Table 6
Peak Hour Intersection Analysis Results
Existing Condition

ID	Intersection Name	Intersection Control	Movement	Existing Traffic Condition			
				AM Peak Hour		PM Peak Hour	
				Delay (veh/sec)	LOS	Delay (veh/sec)	LOS
1	Bryant Street/Oak Glen Road *	Signalized	Overall Int.	28.6	C	17.9	B
2	Bryant Street/Fir Avenue	Signalized	Overall Int.	12.1	B	3.2	A
3	Bryant Street/Carter Street	Unsignalized	EB App	13.4	B	11.6	B
			WB App	19.0	C	16.5	C
4	Jefferson Street/Carter Street	Unsignalized	NB App	9.2	A	8.7	A
			SB App	8.7	A	8.7	A
5	Oak Glen Road/Pendleton Road	Unsignalized	NB App	9.6	A	9.5	A
6	Oak Glen Road/Casa Blanca Avenue	Unsignalized	NB App	9.5	A	9.4	A
7	Oak Glen Road/Cherry Croft Drive	Unsignalized	SB App	9.2	A	9.8	A
8	Pendleton Road/Date Street	Unsignalized	EB App	8.4	A	8.7	A
			WB App	0.0	A	9.2	A

Note:
** Indicates San Bernardino Association of Governments (SANBAG) Congestion Management Program (CMP) Monitored Intersection.*

As shown in **Table 6**, all signalized intersections analyzed in this study are expected to operate at an acceptable Level of Service, LOS C or better, during both morning and evening peak hours. All

unsignalized study intersections/ stop controlled approaches are expected to operate at an acceptable Level of Service, LOS B or better, during both morning and evening peak hours under this condition.

3.4.2 Roadway Segment Analysis

Table 7 summarizes the result of the roadway segment analysis under the existing conditions. The roadway segment analysis was performed using the roadway classifications and daily volume capacity obtained from the City of Yucaipa general plan and Circulation Element. The daily roadway capacity used by the City is presented in Section 2.0 of this report. As shown in the **Table 7**, all study roadway segments are operating at LOS A under the existing traffic conditions.

Table 7
Roadway Segment Analysis Results
Existing Conditions

ID	Roadway	Segment Location	Geom.	Capacity[1]	Daily Vol	LOS	V/C
1	Bryant St	Bet. Oak Glen Rd and Fir Ave *	4 U	30,000	12,964	A	0.43
2	Bryant St	Bet. Oak Glen Rd and Date St *	4 U	30,000	12,529	A	0.42
3	Oak Glen Rd	Bet. 2nd St and Bryant St *	4 U	30,000	12,512	A	0.42
4	Oak Glen Rd	Bet. Bryant St and Fremont Ave	2 U	16,000	4,302	A	0.27
5	Oak Glen Rd	Bet. Fremont Ave and Jefferson St	2 U	16,000	2,793	A	0.17
6	Oak Glen Rd	Bet. Jefferson St and Casa Blanca Ave	2 U	16,000	2,572	A	0.16
7	Oak Glen Rd	East of Casa Blanca Ave	2 U	16,000	1,907	A	0.12
8	Fir Ave	East of Fremont St	2 U	16,000	336	A	0.02
9	Pendleton Rd	South of Oak Glen Rd	2 U	16,000	452	A	0.03
10	Pendleton Rd	North of Date St	2 U	16,000	668	A	0.04
11	Cherry Croft Rd	North of Oak Glen Rd	2 U	16,000	41	A	0.00
12	Date St	East of Bryant St	2 U	16,000	3,255	A	0.20
13	Jefferson St	South of Carter St	2 U	160,000	40	A	0.00

Note:
** Indicates San Bernardino Association of Governments (SANBAG) Congestion Management Program (CMP) Monitored Roadway Segment*
1. U= Undivided Highway, D = Divided Highway.

Figure 3: Existing Intersection Geometrics

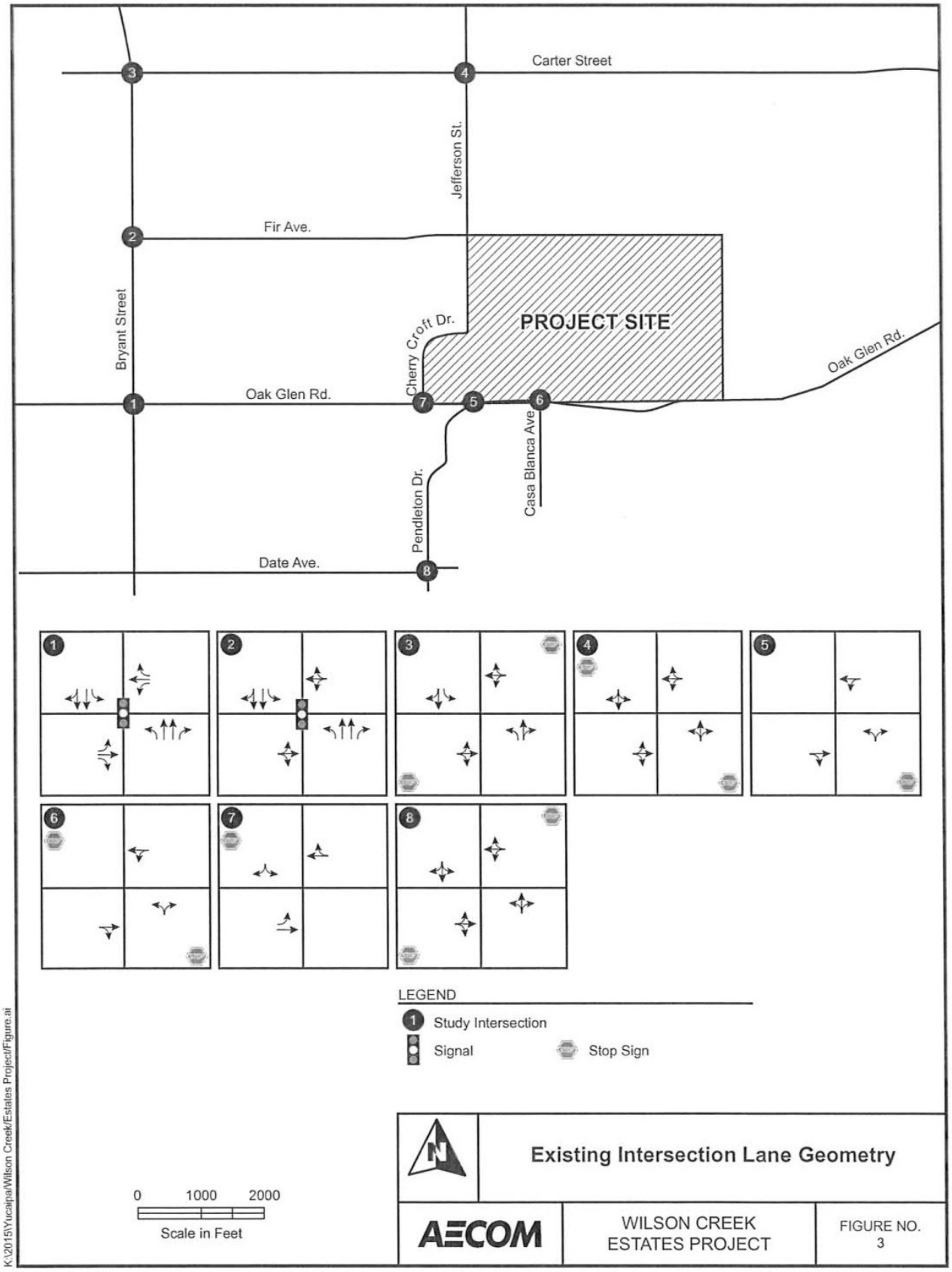

Figure 4: Existing Traffic Volume

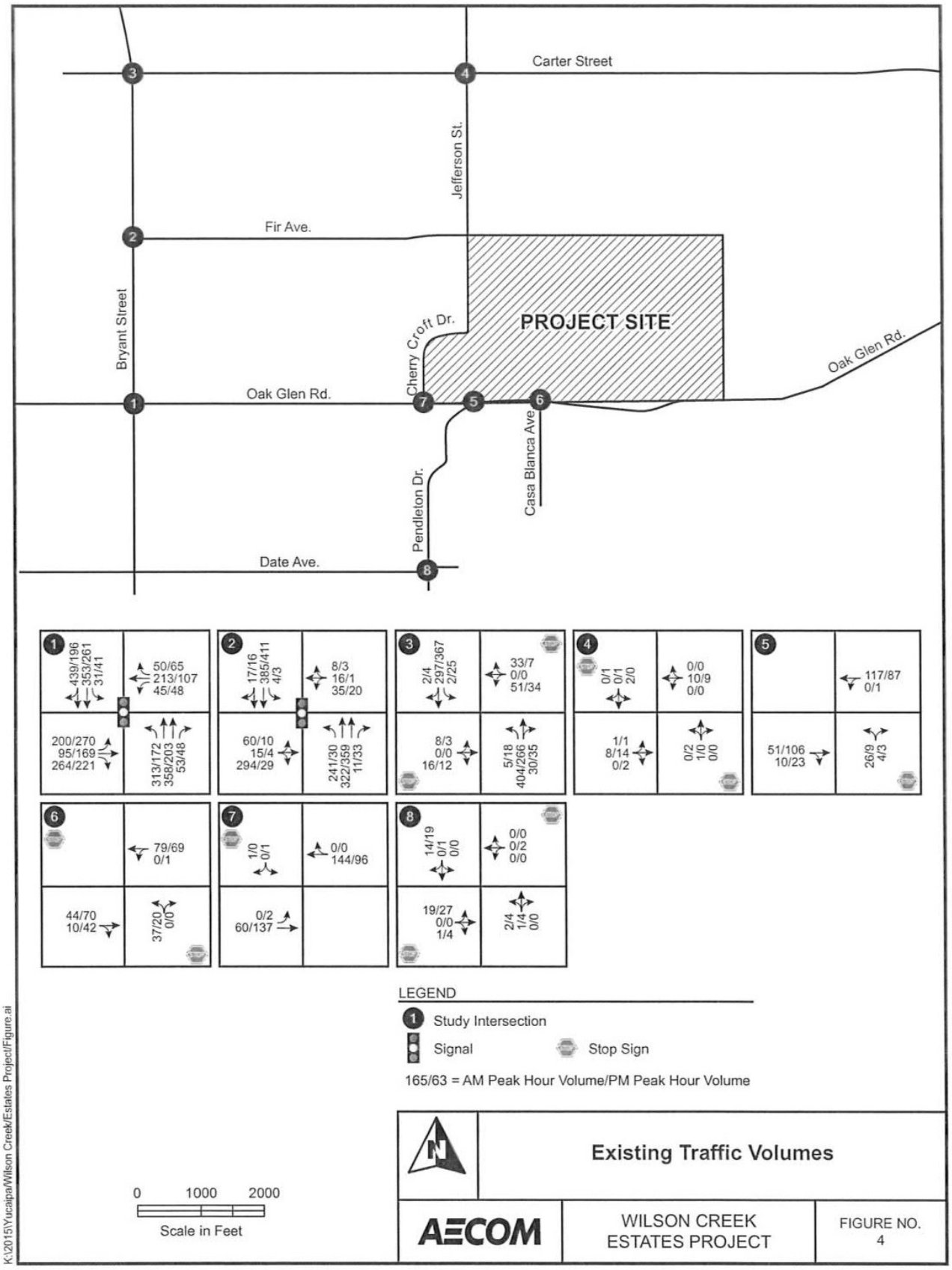

4.0 PROJECT DESCRIPTION

This section describes the proposed Wilson Creek Estates Project (project) and its anticipated trip generation/distribution estimates.

4.1 PROJECT DESCRIPTION

The Project consists of a Phased Tentative Tract Map (TTM) to subdivide approximately 236 gross acres into 184 single family lots each with a minimum lot size of one (1) gross acre, with two (2) additional "Not a Part" lots for an existing private residence (Casa Blanca Ranch) and water tank/pump station site owned and operated by the Yucaipa Valley Water District. **Figure 5** shows the Project Site Plan.

4.1.1 Project Site Access

Access to the site is proposed from Jefferson Street and Oak Glen Road, including four access points from Jefferson Street and two access points from Oak Glen Road.

4.1.2 Planned Roadway Improvements

Several roadway improvements are planned to facilitate overall traffic circulations within the project study area. These improvements are listed below and are expected to take place during the construction of the proposed project:

- Extend Jefferson Street further south to connect with the Oak Glen Road (to be completed by the developer of the proposed project.)
- Realign Pendleton Road to line-up with the Jefferson Street on the south. This will create a new four-leg intersection at Oak Glen Road (to be completed by the City.)
- Extend Fir Avenue further east to connect with the Jefferson Street (to be completed by the developer of the proposed project.)
- Construct Jefferson Street/Cherry Croft Drive intersection as a new four leg intersection. Site Access Street B will form the fourth leg on the east (to be completed by the developer of the proposed project.)

4.1.3 Project Trip Generation

The proposed Wilson Creek Estates project will include 184 single family dwelling units upon completion. Trip generation estimate was prepared using the *Institute of Transportation Engineers (ITE) Trip Generation Handbook, 9th Edition.*

Table 8 shows the trip generation estimate for the proposed Wilson Creek Estates Project. As shown in the table, the Proposed Project is expected to generate 1,752 trips (876 entering and 876 exiting the site) on an average weekday. During the morning (7-9 AM) peak hour, there will be a total of 138 trips of which 35 trips will enter the site and 104 trips will exit the site. During the evening (4-6 PM) peak hour, there will be a total of 184 trips of which 116 trips will enter the site and 69 trips will exit the site.

Table 8
Project Trip Generation Estimates

Trip Generation Estimate[1] (Wilson Creek Estates, Yucaipa, CA)													
Land Use	Qty.	Trip Generation Rate (Total)			Total Trips Generated								
					Daily			AM			PM		
		Daily	AM	PM	Total	in	out	Total	in	out	Total	in	out
Single Family (Land Use Code #210)	184	9.52	0.75	1.00	1,752	876	876	138	35	104	184	116	69

Note:

1. Based on Institution of Transportation Engineers (ITE) Trip Generation Handbook, 9th Edition.

4.1.4 Project Trip Distribution

The project trip distribution percentages were estimated considering the location of the project site, major employment centers, existing traffic counts, and existing travel pattern along surrounding roadway network. The trip distribution assumptions were finalized through discussion with the City of Yucaipa staff. AECOM had reviewed the refined trip distribution assignment and concurs that the trip assignment are reasonable and reflect logical trip patterns in context to the project site and the surrounding trip attraction areas. Trip distribution percentages assumed for the Wilson Creek Estates Project are described below.

- Oak Glen Road west of Bryant Street (45%)
- Bryant Street south of Oak Glen Road (50%)
- Bryant Street north of Carter Street (10%)

Figure 6 shows the project added trips distributed to the study intersections and roadway networks.

Figure 5: Project Site Plan

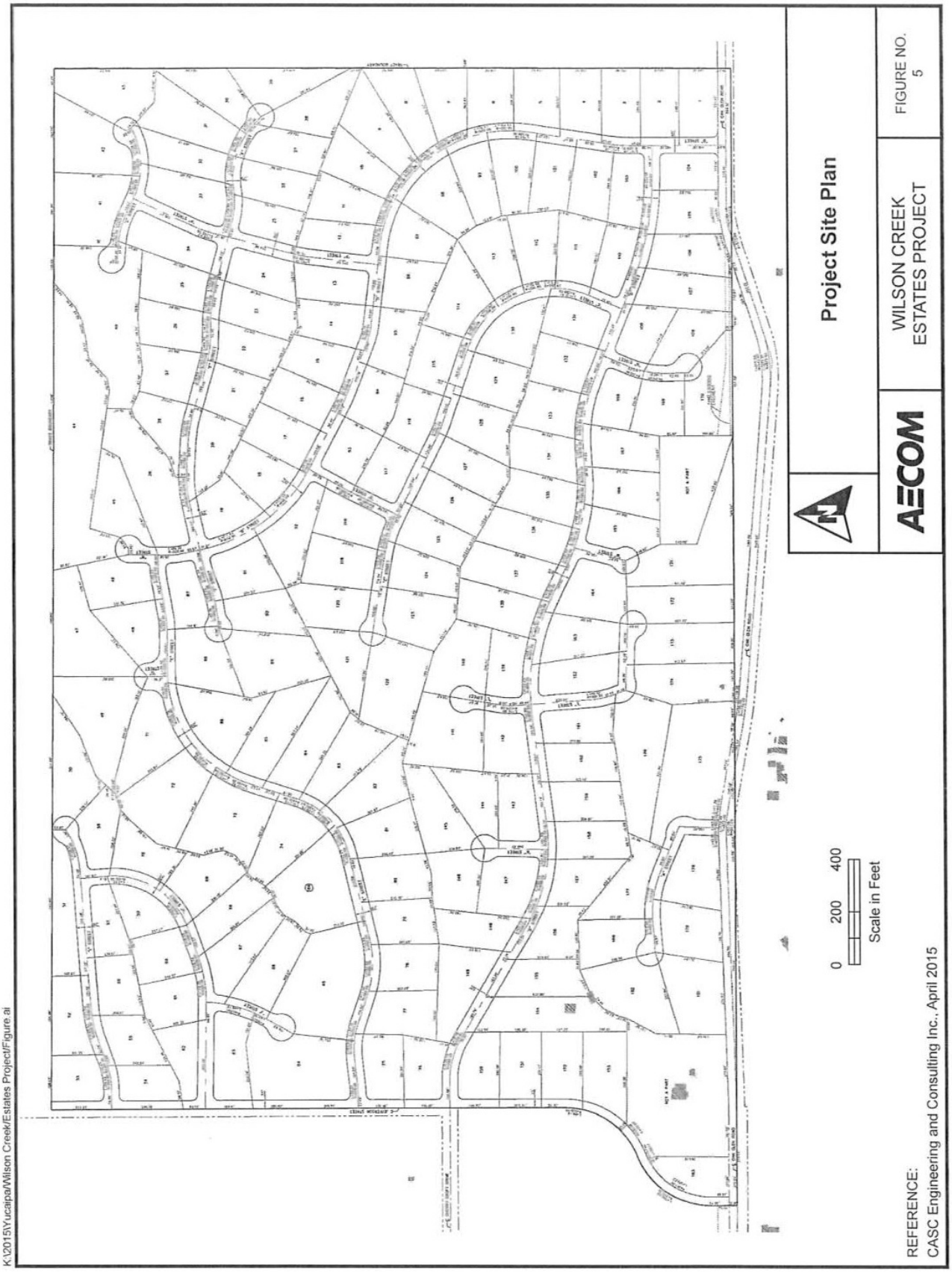

Figure 6: Project Added Trips

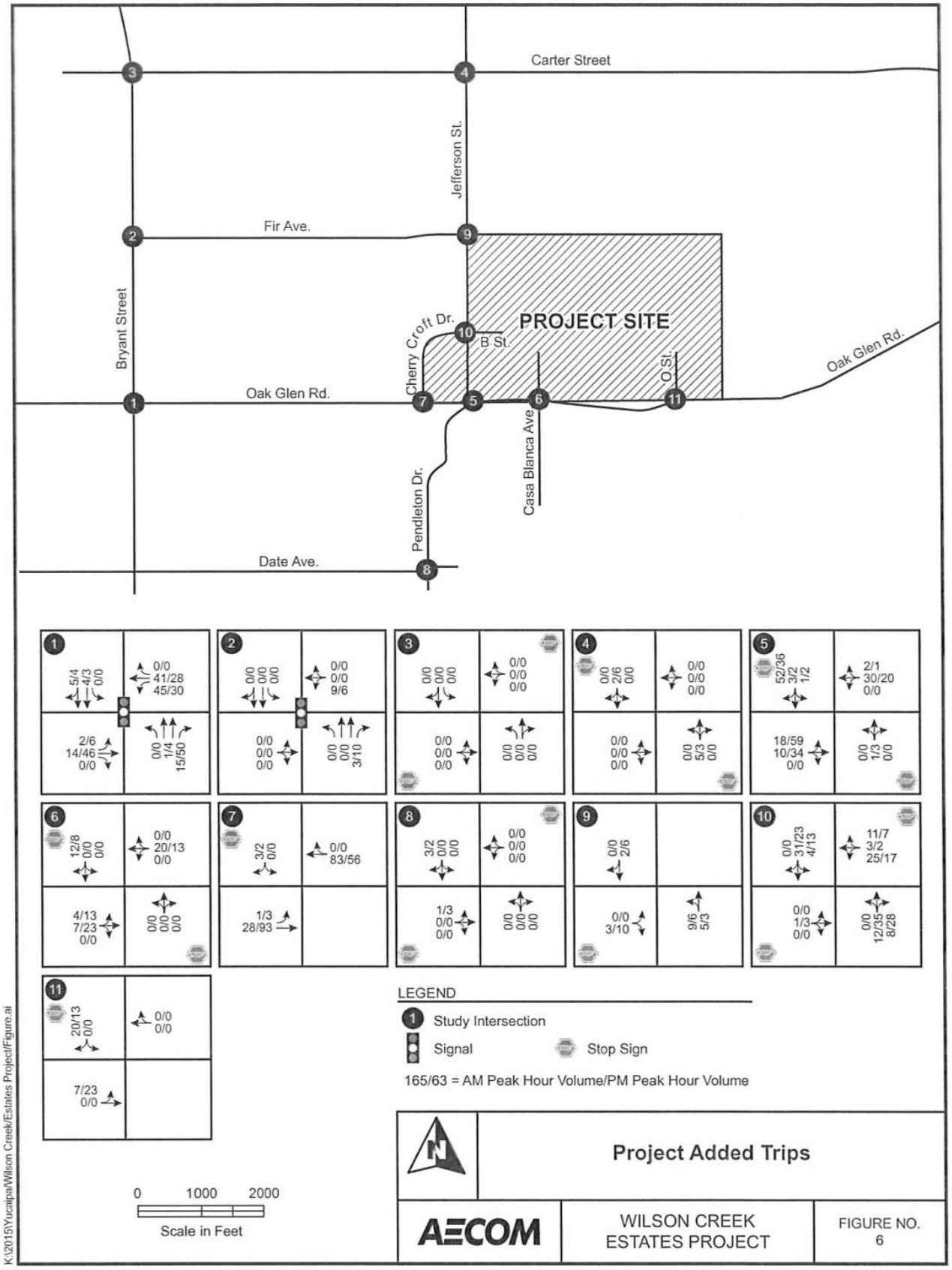

5.0 EXISTING WITH PROJECT TRAFFIC CONDITIONS

This section provides an analysis of the existing with project traffic conditions, consistent with discussions and consultation with City of Yucaipa Engineering and Planning Departments.

5.1.1 Intersection Analysis

Morning and evening Peak hour traffic volumes for the existing with project conditions were developed by adding the existing traffic volumes with the project generated trips presented in Section 4. **Figure 7** illustrates the existing with project condition traffic volumes. **Figure 8** illustrates the existing with project intersection lane geometry.

Analysis includes the existing intersection geometry without any improvements. However, the Oak Glen Road and Jefferson Street intersection was analyzed as a four-leg intersection, based on the assumption that Pendleton Road on the south will line up with the Jefferson Street on the north to form a four-leg intersection under this scenario. In addition, the analysis under this condition comprises additional intersections planned to be created during the development of the proposed project. These additional intersections will primarily serve the trips generated from the project site, and consist of the following geometric configuration:

*	Jefferson Street/Fir Avenue:	Three-way (T) intersection with stop sign on eastbound Fir Avenue.
*	Jefferson Street/B Street/Cherry-Croft Dr:	Four-way intersection with stop signs on eastbound Cherry Croft Drive and westbound B Street.
*	Oak Glen Road/ O Street:	Three-way (T) intersection with stop sign on southbound O Street.

Table 9 displays the intersection LOS and delay results under existing with project traffic conditions. The detailed intersection LOS calculation worksheets are provided in **Appendix C.**

As shown in **Table 9**, all signalized intersections analyzed in this study are expected to operate at an acceptable Level of Service, LOS C or better, during both morning and evening peak hours. All unsignalized study intersections/stop controlled approaches are expected to operate at an acceptable Level of Service, LOS B or better, during the peak hours under this condition.

Table 9
Peak Hour Intersection Analysis Results
Existing With Project Traffic Conditions

ID	Intersection Name	Intersection Control	Movement	AM Peak Hour		PM Peak Hour	
				Delay (veh/sec)	LOS	Delay (veh/sec)	LOS
1	Bryant Street/Oak Glen Road *	Signalized	Overall Int	32.4	C	18.3	B
2	Bryant Street/Fir Avenue	Signalized	Overall Int	12.0	B	3.3	A
3	Bryant Street/Carter Street	Unsignalized	EB App	13.4	B	11.6	B
			WB App	19.0	C	16.5	C
4	Jefferson Street/Carter Street	Unsignalized	NB App	9.2	A	9.0	A
			SB App	9.0	A	9.1	A
5	Oak Glen Road/Pendleton Road	Unsignalized	NB App	11.3	B	11.4	B
			SB App	9.6	A	9.3	A
6	Oak Glen Road/Casa Blanca Avenue	Unsignalized	NB App	10.0	B	10.1	B
			SB App	8.9	A	8.7	A
7	Oak Glen Road/Cherry Croft Drive	Unsignalized	SB App	9.8	A	9.6	A
8	Pendleton Road/Date Street	Unsignalized	EB App	8.4	A	8.7	A
			WB App	0.0	A	9.2	A
9	Jefferson St & Fir Ave	Unsignalized	EB App	8.3	A	8.4	A
10	Jefferson St & Cherry Croft (B St)	Unsignalized	EB App	9.3	A	9.7	A
			WB App	8.9	A	9.1	A
11	Oak Glen Rd & O St	Unsignalized	SB App	8.7	A	8.6	A

Note:
** Indicates San Bernardino Association of Governments (SANBAG) Congestion Management Program (CMP) Monitored Intersection.*

5.1.2 Roadway Segment Analysis

Table 10 summarizes the result of the roadway segment analysis under existing with project traffic conditions. The roadway segment analysis was performed using the roadway classifications and daily volume capacity obtained from the City of Yucaipa general plan and Circulation Element. The daily roadway capacity used by the City is presented in Section 2.0 of this report.

As shown in the **Table 10**, all study roadway segments are expected to operate at LOS A under the existing with project traffic conditions.

Table 10
Roadway Segment Analysis Results
Existing With Project Traffic Conditions

ID	Roadway	Segment Location	Geom.	Capacity[1]	Daily Vol	LOS	V/C
1	Bryant St	Bet. Oak Glen Rd and Fir Ave *	4 U	30,000	13,120	A	0.44
2	Bryant St	Bet. Oak Glen Rd and Date St *	4 U	30,000	13,355	A	0.45
3	Oak Glen Rd	Bet. 2nd St and Bryant St *	4 U	30,000	13,300	A	0.44
4	Oak Glen Rd	Bet. Bryant St and Fremont Ave	2 U	16,000	5,758	A	0.36
5	Oak Glen Rd	Bet. Fremont Ave and Jefferson St	2 U	16,000	4,199	A	0.26
6	Oak Glen Rd	Bet. Jefferson St and Casa Blanca Ave	2 U	16,000	3,114	A	0.19
7	Oak Glen Rd	East of Casa Blanca Ave	2 U	16,000	2,249	A	0.14
8	Fir Ave	East of Fremont St	2 U	16,000	442	A	0.03
9	Pendleton Rd	South of Oak Glen Rd	2 U	16,000	502	A	0.03
10	Pendleton Rd	North of Date St	2 U	16,000	718	A	0.04
11	Cherry Croft Rd	North of Oak Glen Rd	2 U	16,000	91	A	0.01
12	Date St	East of Bryant St	2 U	16,000	3,305	A	0.21
13	Jefferson St	South of Carter St	2 U	16,000	128	A	0.01
14	Jefferson St	North of Oak Glen Rd	2 U	16,000	968	A	0.06

Note:
** Indicates San Bernardino Association of Governments (SANBAG) Congestion Management Program (CMP) Monitored Roadway Segment.*
1. U= Undivided Highway, D = Divided Highway.

Figure 7: Existing With Project Traffic Volumes

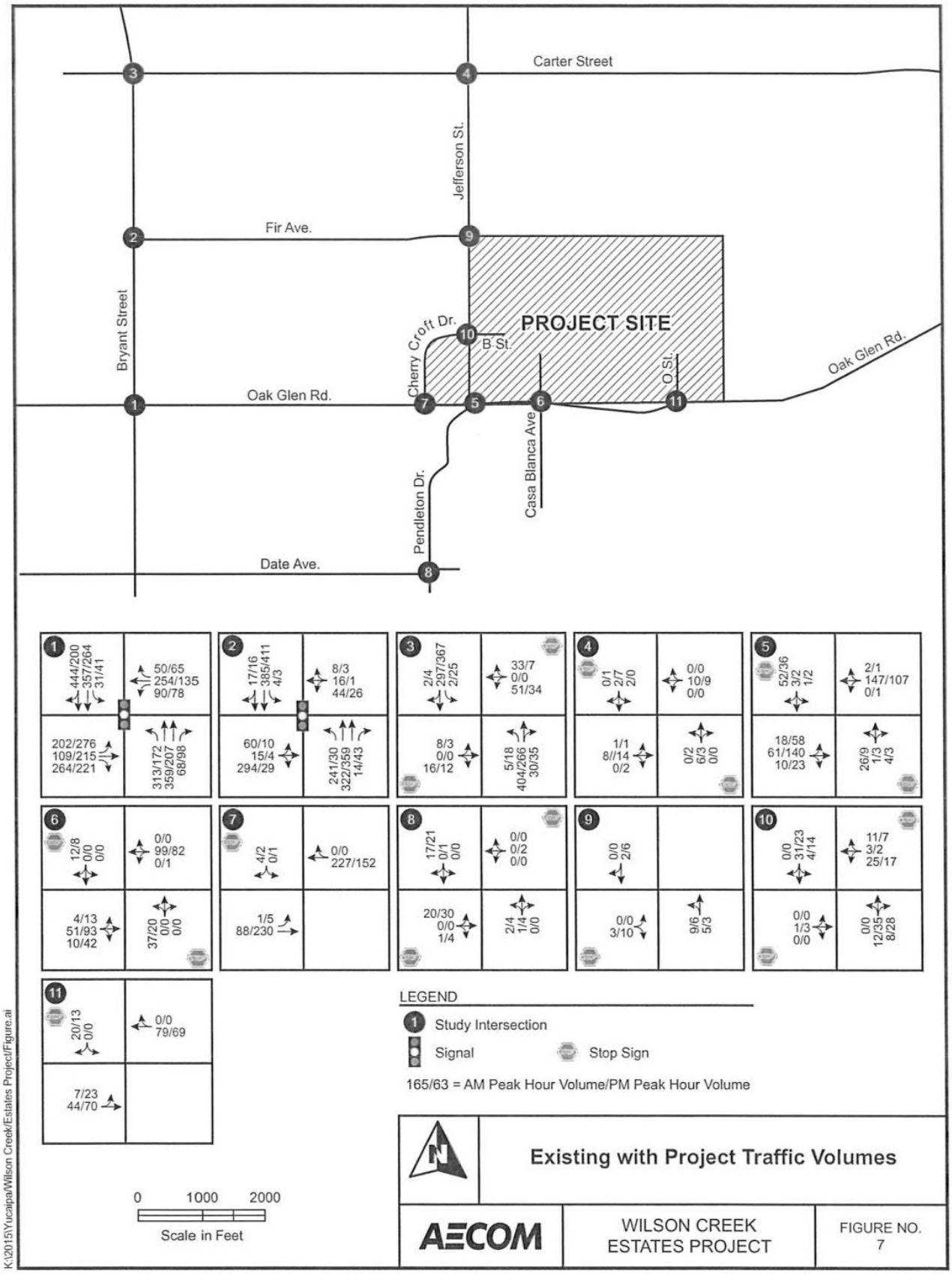

Figure 8: Existing With Project Lane Geometry

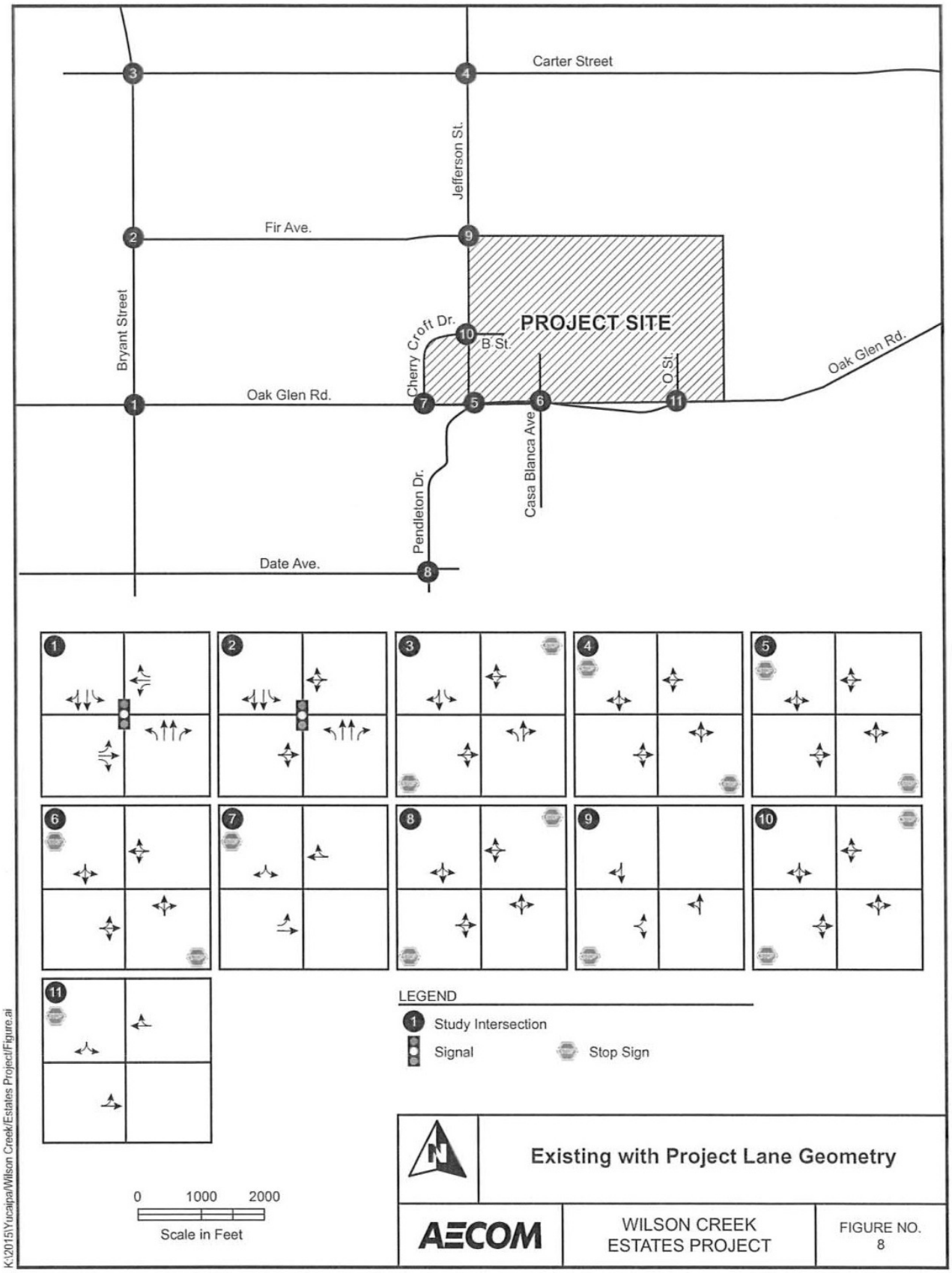

6.0 LONG TERM (2040) TRAFFIC CONDITIONS

This section provides an analysis of Long Term 2040 traffic conditions for both with and without the proposed project.

The analysis was performed using the long term forecast volumes developed based on the 2035 San Bernardino County Transportation Analysis Model (SBTAM). The long term forecast volume development process consists of three steps. First step comprises calculating the growth rate between the 2013 and 2035 SBTAM model volumes. Second step entails applying the calculated annual growth rate to the 2015 existing traffic counts for 25 years to estimate the 2040 forecast volumes. The third and final step involves checking the estimated forecast volumes and making appropriate manual adjustments based on the engineering judgment.

6.1 LONG TERM (2040) NO BUILD CONDITIONS ANALYSIS

This section provides documents the analysis performed under the 2040 No Build (No Project) traffic conditions. The 2040 No Build conditions will be used as the baseline to evaluate potential future traffic impacts associated with the operation of the proposed Wilson Creek Estates Project.

6.1.1 Intersection Analysis

This section presents the peak hour intersection analysis performed under the 2040 No Build traffic conditions. Analysis was performed using the methodology described in Section 2.0 of this report. The 2040 No Build analysis uses the existing lane geometry shown in **Figure 3** and Long Term (2040) No Build traffic volumes shown in **Figure 9**.

Table 11 displays the intersection LOS and delay results for the 2040 No Build traffic conditions. The detailed intersection LOS calculation worksheets are provided in **Appendix D.**

Table 11
Peak Hour Intersection Analysis Results
2040 No Build (No Project) Traffic Conditions

ID	Intersection Name	Intersection Control	Movement	Existing Traffic Condition			
				AM Peak Hour		PM Peak Hour	
				Delay (veh/sec)	LOS	Delay (veh/sec)	LOS
1	Bryant Street/Oak Glen Road *	Signalized	Overall Int.	18.6	B	17.9	B
2	Bryant Street/Fir Avenue	Signalized	Overall Int.	12.4	B	3.3	A
3	Bryant Street/Carter Street	Unsignalized	EB App	17.6	C	15.4	C
			WB App	36.0	E	31.5	D
4	Jefferson Street/Carter Street	Unsignalized	NB App	9.2	A	8.8	A
			SB App	8.7	A	8.8	A
5	Oak Glen Road/Pendleton Road	Unsignalized	NB App	10.0	B	10.1	B
6	Oak Glen Road/Casa Blanca Avenue	Unsignalized	NB App	9.8	A	10.0	B
7	Oak Glen Road/Cherry Croft Drive	Unsignalized	SB App	9.4	A	10.6	B
8	Pendleton Road/Date Street	Unsignalized	EB App	8.4	A	8.8	A
			WB App	0.0	A	9.3	A

Note:
** Indicates San Bernardino Association of Governments (SANBAG) Congestion Management Program (CMP) Monitored Intersection.*

As shown in **Table 11**, all signalized study intersections are expected to operate at LOS B or better during both morning and evening peak hours. All unsignalized study intersections/stop controlled approaches are also projected to operate at LOS B or better under this condition. Only exception to this is the westbound approach of the Bryant Street and Carter Street intersection, which is projected to operate at an unacceptable (by City standard) LOS E during the morning and LOS D during the evening peak hour.

6.1.2 Roadway Segment Analysis

This section presents the daily roadway segment analysis results performed for the 2040 No Build traffic conditions. **Table12** summarizes the result of the roadway segment analysis for the 2040 No Build conditions. The roadway segment analysis was performed using the roadway classifications and daily volume capacity obtained from the City of Yucaipa general plan and Circulation Element. The standard daily roadway capacity used by the City is presented in Section 2.0 of this report.

As shown in the **Table 12**, all study roadway segments are expected to operate at LOS B or better under the 2040 No Build traffic conditions.

Table 12
Roadway Segment Analysis Results
2040 No Build (No Project) Traffic Conditions

ID	Roadway	Segment Location	Geom.	Capacity[1]	Daily Vol	LOS	V/C
1	Bryant St	Bet. Oak Glen Rd and Fir Ave *	4 U	30,000	19,122	B	0.64
2	Bryant St	Bet. Oak Glen Rd and Date St *	4 U	30,000	18,794	B	0.63
3	Oak Glen Rd	Bet. 2nd St and Bryant St *	4 U	30,000	10,948	A	0.36
4	Oak Glen Rd	Bet. Bryant St and Fremont Ave	2 U	16,000	5,916	A	0.37
5	Oak Glen Rd	Bet. Fremont Ave and Jefferson St	2 U	16,000	3,911	A	0.24
6	Oak Glen Rd	Bet. Jefferson St and Casa Blanca Ave	2 U	16,000	4,051	A	0.25
7	Oak Glen Rd	East of Casa Blanca Ave	2 U	16,000	3,052	A	0.19
8	Fir Ave	East of Fremont St	2 U	16,000	479	A	0.03
9	Pendleton Rd	South of Oak Glen Rd	2 U	16,000	543	A	0.03
10	Pendleton Rd	North of Date St	2 U	16,000	919	A	0.06
11	Cherry Croft Rd	North of Oak Glen Rd	2 U	16,000	62	A	0.00
12	Date St	East of Bryant St	2 U	16,000	4,964	A	0.31
13	Jefferson St	South of Carter St	2 U	160,000	60	A	0.00

Note:
** Indicates San Bernardino Association of Governments (SANBAG) Congestion Management Program (CMP) Monitored Roadway Segment.*
1. U= Undivided Highway, D = Divided Highway.

Figure 9: 2040 No Build (No Project) Traffic Volumes

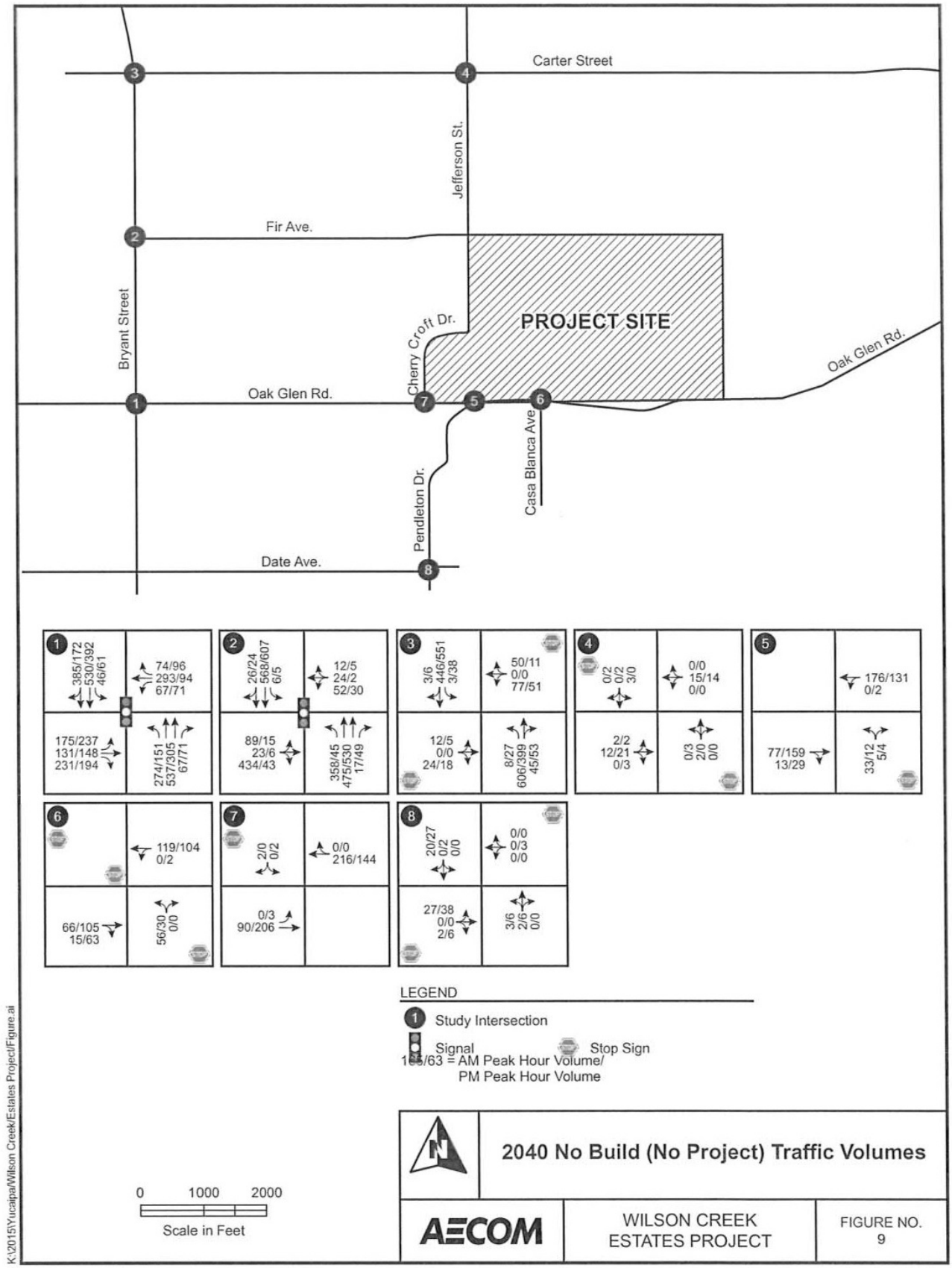

6.2 LONG TERM (2040) BUILD CONDITIONS ANALYSIS

The Long Term (2040) Build analysis shapes upon the Long Term (2040) No Build conditions and incorporates all applicable circulation facility and land use improvements that are either constructed or planned for completion by 2040.

6.2.1 Intersection Analysis

This section presents the peak hour intersection analysis performed under the 2040 Build traffic conditions. The analysis was performed using the methodology described in Section 2.0 of this report. **Figure 10** shows the Long Term (2040) Build traffic volumes used for the analysis. **Figure 11** shows the Long Term (2040) Build intersection lane geometry. **Table 13** displays intersection LOS and delay analysis results for the 2040 Build traffic conditions. The intersection LOS calculation worksheets are provided in **Appendix E.**

Table 13
Peak Hour Intersection Analysis Results
2040 Build (With Project) Traffic Conditions

ID	Intersection Name	Intersection Control	Movement	AM Peak Hour		PM Peak Hour	
				Delay (veh/sec)	LOS	Delay (veh/sec)	LOS
1	Bryant Street/Oak Glen Road *	Signalized	Overall Int	19.4	B	18.3	B
2	Bryant Street/Fir Avenue	Signalized	Overall Int	12.4	B	3.4	A
3	Bryant Street/Carter Street	Unsignalized	EB App	17.6	C	15.4	C
			WB App	36.0	**E**	31.5	D
4	Jefferson Street/Carter Street	Unsignalized	NB App	9.2	A	9.0	A
			SB App	8.9	A	9.1	A
5	Oak Glen Road/Pendleton Road	Unsignalized	NB App	11.6	B	12.5	B
			SB App	9.8	A	9.6	A
6	Oak Glen Road/Casa Blanca Avenue	Unsignalized	NB App	10.5	B	10.9	B
			SB App	9.0	A	8.9	A
7	Oak Glen Road/Cherry Croft Drive	Unsignalized	SB App	9.9	A	10.6	B
8	Pendleton Road/Date Street	Unsignalized	EB App	8.4	A	8.9	A
			WB App	0.0	A	9.3	A
9	Jefferson St & Fir Ave	Unsignalized	EB App	8.3	A	8.4	A
10	Jefferson St & Cherry Croft (B St)	Unsignalized	EB App	9.3	A	9.7	A
			WB App	8.9	A	9.1	A
11	Oak Glen Rd & O St	Unsignalized	SB App	8.9	A	8.8	A

Note:
** Indicates San Bernardino Association of Governments (SANBAG) Congestion Management Program (CMP) Monitored Intersection.*

As shown in **Table 13**, all signalized study intersections are projected to operate at LOS B or better during both morning and evening peak hours. All unsignalized study intersections/ stop controlled approaches are also projected to operate at LOS B or better under this condition. Only exception to this is westbound approach of the Bryant Street and Carter Street intersection, which is expected to operate at unacceptable (by City Standard) LOS E during the morning and LOS D during the evening peak hour. It should be noted that the project added trips are expected to increase the delay by less than 3 seconds at this approach.

6.2.2 Roadway Segment Analysis

Table 14 summarizes the result of the roadway segment analysis for the 2040 Build conditions. The roadway segment analysis was performed using the roadway classifications and daily volume capacity obtained from the City of Yucaipa general plan and Circulation Element. The standard daily roadway capacity used by the City is presented in Section 2.0 of this report. As shown in the **Table 14**, all study roadway segments are expected to operate at LOS B or better under the 2040 Build traffic conditions.

Table 14
Roadway Segment Analysis Results
2040 Build (With Project) Traffic Conditions

ID	Roadway	Segment Location	Geom.	Capacity[1]	Daily Vol	LOS	V/C
1	Bryant St	Bet. Oak Glen Rd and Fir Ave *	4 U	30,000	19,278	B	0.64
2	Bryant St	Bet. Oak Glen Rd and Date St *	4 U	30,000	19,620	B	0.65
3	Oak Glen Rd	Bet. 2nd St and Bryant St *	4 U	30,000	11,736	A	0.39
4	Oak Glen Rd	Bet. Bryant St and Fremont Ave	2 U	16,000	7,372	A	0.46
5	Oak Glen Rd	Bet. Fremont Ave and Jefferson St	2 U	16,000	5,317	A	0.33
6	Oak Glen Rd	Bet. Jefferson St and Casa Blanca Ave	2 U	16,000	4,593	A	0.29
7	Oak Glen Rd	East of Casa Blanca Ave	2 U	16,000	3,394	A	0.21
8	Fir Ave	East of Fremont St	2 U	16,000	585	A	0.04
9	Pendleton Rd	South of Oak Glen Rd	2 U	16,000	593	A	0.04
10	Pendleton Rd	North of Date St	2 U	16,000	969	A	0.06
11	Cherry Croft Rd	North of Oak Glen Rd	2 U	16,000	112	A	0.01
12	Date St	East of Bryant St	2 U	16,000	5,014	A	0.31
13	Jefferson St	South of Carter St	2 U	16,000	148	A	0.01
14	Jefferson St	North of Oak Glen Rd	2 U	16,000	968	A	0.06

Note:
** Indicates San Bernardino Association of Governments (SANBAG) Congestion Management Program (CMP) Monitored Roadway Segment.*
1. U= Undivided Highway, D = Divided Highway.

6.3 ANALYSIS WITH SEASONAL ADJUSTMENT

Additional analysis was performed based on direction from the City of Yucaipa to account for the increase in traffic volume during apple-picking season in the months of October and November along Oak Glen Road. Analysis assumes 10% increase in through traffic volume on Oak Glen Road. The purpose of the analysis was to identify any potential impact due to the seasonal variation in traffic volumes.

Table 15 shows the intersection LOS analysis results performed with the traffic volumes adjusted for the seasonal variation. As shown in **Table 15,** all study intersections are expected to operate an acceptable level of service, LOS B or better during both morning and evening peak hours under future no build and build (with project) conditions.

Table 16 shows the roadway segment analysis results performed with the traffic volumes adjusted for the seasonal variation. As shown in **Table 16,** all study roadway segments are expected to operate an acceptable level of service LOS A under future no build and build (with project) conditions.

Table 15
Intersection Peak Hour Level of Service Results with Seasonal Adjustment

INTID	INTERSECTION NAME	Control	Movement	2015 Existing				2015 Existing Plus Project				2040 No Build (No Project)				2040 Build (With Project)			
				AM Peak		PM Peak		AM Peak		PM Peak		AM Peak		PM Peak		AM Peak		PM Peak	
				Del	LOS	Del	LOS	Del	LOS	Del	LOS	Del	LOS	Del	LOS	Del	LOS	Del	LOS
1	Bryant St / Oak Glen Rd	Signalized	Overall Int	29.9	C	17.9	B	34.0	C	18.3	B	18.9	B	18.0	B	19.7	B	18.3	B
5	Pendleton Rd / Oak Glen Rd *	Unsignalized	NB App	9.6	A	9.6	A	11.3	B	11.6	B	10.2	B	10.3	B	11.9	B	12.8	B
			SB App	-	-	-	-	9.6	A	9.3	A	-	-	-	-	9.9	A	9.7	A
6	Casa Blanca Ave / Oak Glen Rd	Unsignalized	NB App	9.5	A	9.5	A	10.0	B	10.3	B	10.0	B	10.2	B	10.6	B	11.1	B
			SB App	-	-	-	-	8.9	A	8.7	A	-	-	-	-	9.1	A	8.9	A
7	Cherry Croft Drive / Oak Glen Rd	Unsignalized	SB App	9.2	A	9.9	A	9.9	A	9.7	A	9.5	A	10.9	B	10.0	B	10.8	B
11	Oak Glen Rd & O St	Unsignalized	SB App	-	-	-	-	8.7	A	8.7	A	-	-	-	-	9.0	A	8.9	A

Note:
1. Analysis was performed using Highway Capacity Manual (HCM) 2000 methodology
2. Average Vehicle delay in seconds/Vehicle.

Table 16
Summary of Roadway Segment Level of Service Results

ID	Roadway	Segment Location	Capacity	2015 Existing			2015 Existing Plus Project				2040 No Build (No Project)			2040 Build (With Project)			
				ADT	LOS	V/C	ADT	LOS	V/C	Diff	ADT	LOS	V/C	ADT	LOS	V/C	Diff
3	Oak Glen Rd	2nd St to Bryant St *	30,000	13,764	A	0.46	14,552	A	0.49	0.03	12,043	A	0.40	12,831	A	0.43	0.03
4	Oak Glen Rd	Bryant St to Fremont Ave*	16,000	4,733	A	0.30	6,189	A	0.39	0.09	6,508	A	0.41	7,964	A	0.50	0.09
5	Oak Glen Rd	Fremont Ave to Jefferson St	16,000	3,073	A	0.19	4,479	A	0.28	0.09	4,303	A	0.27	5,709	A	0.36	0.09
6	Oak Glen Rd	Jefferson St to Casa Blanca Ave	16,000	2,830	A	0.18	3,372	A	0.21	0.03	4,457	A	0.28	4,999	A	0.31	0.03
7	Oak Glen Rd	East of Casa Blanca Ave	16,000	2,098	A	0.13	2,440	A	0.15	0.02	3,358	A	0.21	3,700	A	0.23	0.02

Note:

Figure 10: 2040 Build (With Project) Traffic Volumes

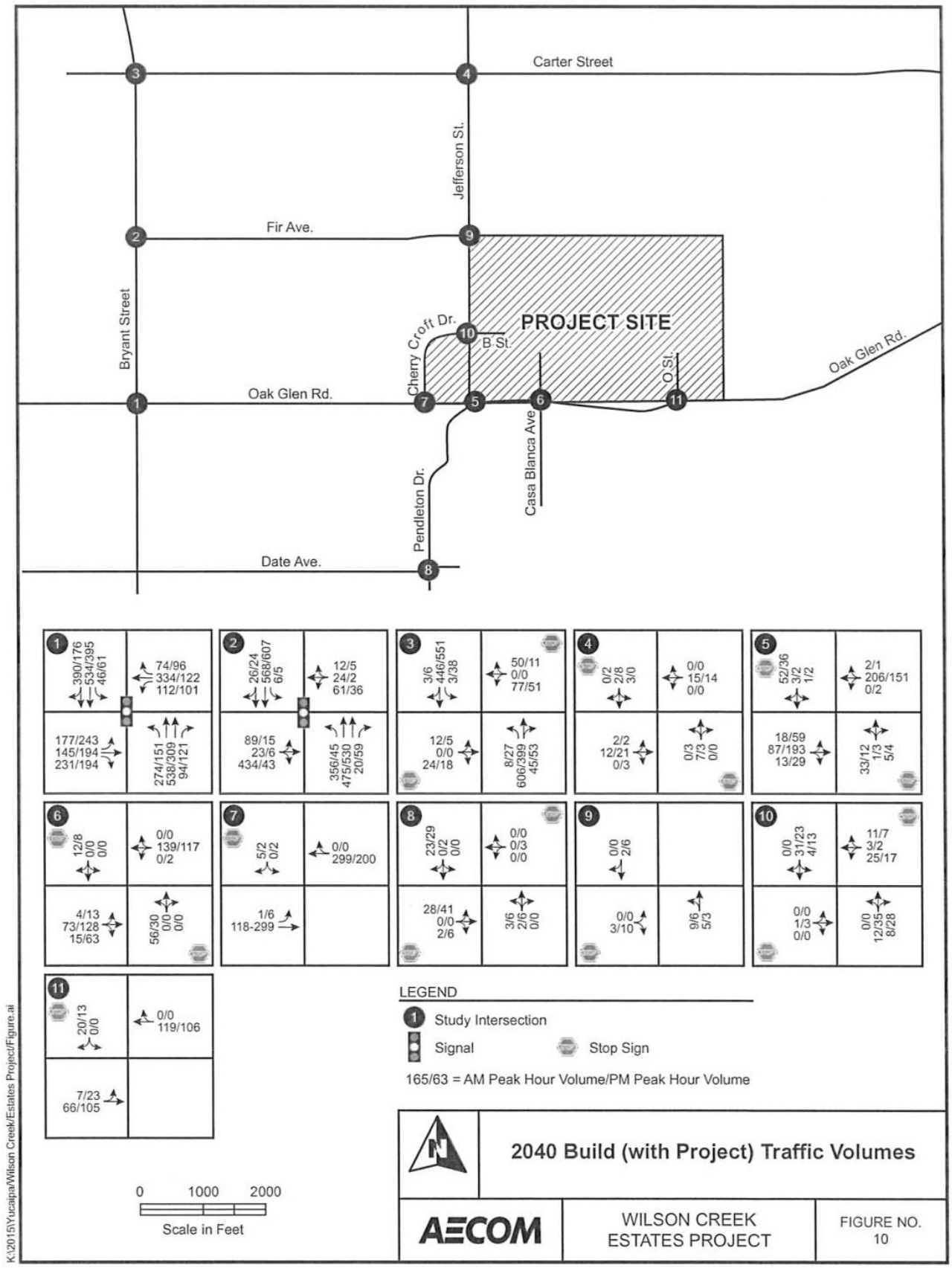

Figure 11: 2040Lane Geometry With Project

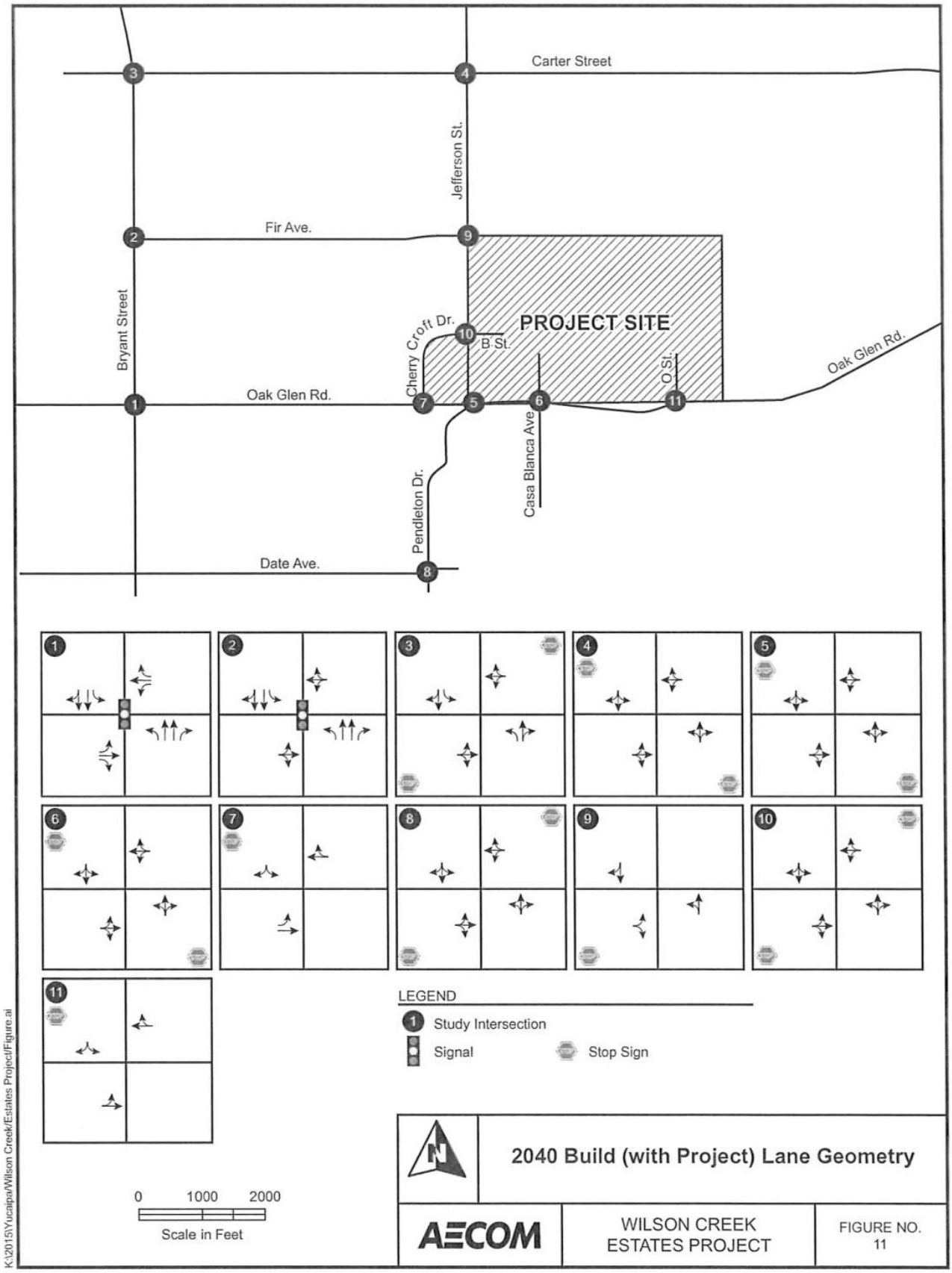

7.0 FINDINGS AND RECOMMENDATIONS

This chapter provides a summary of the key findings and study recommendations, including the LOS results for each of the scenario analyzed. Both with and without project conditions are discussed.

7.1 INTERSECTION ANALYSIS SUMMARY

Table 17 displays intersection Level of Service results for each of the analyzed scenarios.

The following key points summarize the intersection traffic analyses of the proposed Wilson Creek Estates Project:

- Under Existing conditions, all study intersections are currently operating at LOS C or better during both the morning and evening peak hours.
- Under Existing Plus Project conditions, all study intersections are forecast to operate at LOS C or better during the evening peak hour.
- Under Long Term (2040) No Build conditions, all study intersections are forecast to operate at LOS C or better during both morning and evening peak hours with the exception of Bryant Street/Carter Street which is expected to operate at LOS E during the morning peak hour and LOS D during the evening peak hour.
- Under Long Term (2040) Build conditions, all study intersections are forecast to operate at LOS C or better during both morning and evening peak hours with the exception of Bryant Street/Carter Street which is expected to operate at LOS E during the morning peak hour and LOS D during the evening peak hour. The proposed Wilson Creek Estates Project will not add any delay to this intersection.

Table 17
Summary of Intersection Peak Hour Level of Service Results

INTID	INTERSECTION NAME	Control	Movement	2015 Existing				2015 Existing Plus Project				2040 No Build (No Project)				2040 Build (With Project)			
				AM Peak		PM Peak		AM Peak		PM Peak		AM Peak		PM Peak		AM Peak		PM Peak	
				Del	LOS	Del	LOS	Del	LOS	Del	LOS	Del	LOS	Del	LOS	Del	LOS	Del	LOS
1	Bryant St / Oak Glen Rd	Signalized	Overall Int	28.6	C	17.9	B	32.4	C	18.3	B	18.6	B	17.9	B	19.4	B	18.3	B
2	Bryant St / Fir Ave	Signalized	Overall Int	12.1	B	3.2	A	12.0	B	3.3	A	12.4	B	3.3	A	12.4	B	3.4	A
3	Bryant St / Carter St	Unsignalized	EB App	13.4	B	11.6	B	13.4	B	11.6	B	17.6	C	15.4	C	17.6	C	15.4	C
			WB App	19.0	C	16.5	C	19.0	C	16.5	C	36.0	E	31.5	D	36.0	E	31.5	D
4	Jefferson St / Carter St	Unsignalized	NB App	9.2	A	8.7	A	9.2	A	9.0	A	9.2	A	8.8	A	9.2	A	9.0	A
			SB App	8.7	A	8.7	A	9.0	A	9.1	A	8.7	A	8.8	A	8.9	A	9.1	A
5	Pendleton Rd / Oak Glen Rd *	Unsignalized	NB App	9.6	A	9.5	A	11.3	B	11.4	B	10.0	B	10.1	B	11.6	B	12.5	B
			SB App	-	-	-	-	9.6	A	9.3	A	-	-	-	-	9.8	A	9.6	A
6	Casa Blanca Ave / Oak Glen Rd	Unsignalized	NB App	9.5	A	9.4	A	10.0	B	10.1	B	9.8	A	10.0	B	10.5	B	10.9	B
			SB App	-	-	-	-	8.9	A	8.7	A	-	-	-	-	9.0	A	8.9	A
7	Cherry Croft Drive / Oak Glen Rd	Unsignalized	SB App	9.2	A	9.8	A	9.8	A	9.6	A	9.4	A	10.6	B	9.9	A	10.6	B
8	Pendleton Rd / Date Ave	Unsignalized	EB App	8.4	A	8.7	A	8.4	A	8.7	A	8.4	A	8.8	A	8.4	A	8.9	A
			WB App	0.0	A		A	0.0	A		A	0.0	A	9.2	A	0.0	A	9.3	A
9	Jefferson St & Fir Ave	Unsignalized	EB App	-	-	-	-	8.3	A	8.4	A	-	-	-	-	8.3	A	8.4	A
10	Jefferson St & Cherry Croft (B St)	Unsignalized	EB App	-	-	-	-	9.3	A	9.7	A	-	-	-	-	9.3	A	9.7	A
			WB App	-	-	-	-	8.9	A	9.1	A	-	-	-	-	8.9	A	9.1	A
11	Oak Glen Rd & O St	Unsignalized	SB App	-	-	-	-	8.7	A	8.6	A	-	-	-	-	8.9	A	8.8	A

Note:
1. Analysis was performed using Highway Capacity Manual (HCM) 2000 methodology
2. Average Vehicle delay in seconds/Vehicle.

7.2 ROADWAY SEGMENT ANALYSIS SUMMARY

Table 18 display roadway segment Level of Service results for each of the analyzed scenarios.

The following key points summarize the roadway segment traffic analyses of the proposed Wilson Creek Estates Project:

- Under Existing conditions, all study segments are currently operating at LOS B or better during both morning and evening peak hours.
- Under Existing Plus Project conditions, all study roadway segments are projected to operate at LOS B or better during both morning and evening peak hours.
- Under Long Term (2040) No Build conditions, all study roadway segments are projected to operate at LOS B or better during both morning and evening peak hours.
- Under Long Term (2040) Build conditions, all study roadway segments are projected to operate at LOS B or better during both morning and evening peak hours.

Table 18
Summary of Roadway Segment Level of Service Results

				2015 Existing			2015 Existing Plus Project				2040 No Build (No Project)			2040 Build (With Project)			
ID	Roadway	Segment Location	Capacity	ADT	LOS	V/C	ADT	LOS	V/C	Diff	ADT	LOS	V/C	ADT	LOS	V/C	Diff
1	Bryant St	Oak Glen Rd to Fir Ave	30,000	12,964	A	0.43	13,120	A	0.44	0.01	19,122	B	0.64	19,278	B	0.64	0.01
2	Bryant St	Oak Glen Rd to Date St	30,000	12,529	A	0.42	13,355	A	0.45	0.03	18,794	B	0.63	19,620	B	0.65	0.03
3	Oak Glen Rd	2nd St to Bryant St *	30,000	12,512	A	0.42	13,300	A	0.44	0.03	10,948	A	0.36	11,736	A	0.39	0.03
4	Oak Glen Rd	Bryant St to Fremont Ave*	16,000	4,302	A	0.27	5,758	A	0.36	0.09	5,916	A	0.37	7,372	A	0.46	0.09
5	Oak Glen Rd	Fremont Ave to Jefferson St	16,000	2,793	A	0.17	4,199	A	0.26	0.09	3,911	A	0.24	5,317	A	0.33	0.09
6	Oak Glen Rd	Jefferson St to Casa Blanca Ave	16,000	2,572	A	0.16	3,114	A	0.19	0.03	4,051	A	0.25	4,593	A	0.29	0.03
7	Oak Glen Rd	East of Casa Blanca Ave	16,000	1,907	A	0.12	2,249	A	0.14	0.02	3,052	A	0.19	3,394	A	0.21	0.02
8	Fir Ave	East of Fremont St	16,000	336	A	0.02	442	A	0.03	0.01	479	A	0.03	585	A	0.04	0.01
9	Pendleton Rd	South of Oak Glen Rd	16,000	452	A	0.03	502	A	0.03	0.00	543	A	0.03	593	A	0.04	0.00
10	Pendleton Rd	North of Date St	16,000	668	A	0.04	718	A	0.04	0.00	919	A	0.06	969	A	0.06	0.00
11	Cherry Croft Rd	North of Oak Glen Rd	16,000	41	A	0.00	91	A	0.01	0.00	62	A	0.00	112	A	0.01	0.00
12	Date St	East of Bryant St	16,000	3,255	A	0.20	3,305	A	0.21	0.00	4,964	A	0.31	5,014	A	0.31	0.00
13	Jefferson St	South of Carter St **	16,000	40	A	0.00	128	A	0.01	0.01	60	A	0.00	148	A	0.01	0.01
14	Jefferson St	North of Oak Glen Rd	16,000	0	A	0.00	968	A	0.06	0.06	0	A	0.00	968	A	0.06	0.06

Note:

7.3 CONCLUSION & RECOMMENDATIONS

The proposed Wilson Creek Estates Project will not create any significant impact to the surrounding street network and intersections analyzed in this study. All study intersections and roadway segments are expected to operate at LOS C or better under all scenarios analyzed in this study. Only exception to this is the Bryant Street/Carter Street, which is projected to operate at LOS E during the morning peak hour and LOS D during the evening peak hour under 2040 traffic conditions both with and without the proposed project. The proposed project will not add any delay to this intersection. However, this intersection should be considered for signalization in the future when MUTCD peak hour signal warrants are met. Additional analysis was performed using seasonal adjustment factor along Oak Glen Road to identify any impact during apple season. Analysis with seasonal adjustment shows all study intersections and roadway segments along Oak Glen Road will operate at an acceptable level of service, LOS A under both no build and build (with project) conditions.

APPENDIX A – TRAFFIC COUNTS

Counts Unlimited, Inc.
PO Box 1178
Corona, CA 92878
(951)268-6268

City of Yucaipa
N/S: Bryant Street
E/W: Carter Street
Weather: Clear

File Name : YUCBRCAAM
Site Code : 19515541
Start Date : 9/29/2015
Page No : 1

Groups Printed- Total Volume

	Bryant Street Southbound				Carter Street Westbound				Bryant Street Northbound				Carter Street Eastbound				
Start Time	Left	Thru	Right	App. Total	Left	Thru	Right	App. Total	Left	Thru	Right	App. Total	Left	Thru	Right	App. Total	Int. Total
07:00 AM	1	53	1	55	10	0	9	19	0	77	4	81	3	0	7	10	165
07:15 AM	0	81	1	82	21	0	9	30	1	90	0	91	3	0	5	8	211
07:30 AM	0	91	0	91	17	0	12	29	1	103	10	114	1	0	5	6	240
07:45 AM	1	80	0	81	9	0	7	16	1	112	9	122	3	0	5	8	227
Total	2	305	2	309	57	0	37	94	3	382	23	408	10	0	22	32	843
08:00 AM	1	45	1	47	4	0	5	9	2	99	11	112	1	0	1	2	170
08:15 AM	7	48	4	59	5	0	2	7	3	63	9	75	0	0	6	6	147
08:30 AM	3	48	0	51	9	0	10	19	1	54	2	57	0	0	6	6	133
08:45 AM	2	47	0	49	11	0	3	14	1	45	6	52	0	0	2	2	117
Total	13	188	5	206	29	0	20	49	7	261	28	296	1	0	15	16	567
Grand Total	15	493	7	515	86	0	57	143	10	643	51	704	11	0	37	48	1410
Apprch %	2.9	95.7	1.4		60.1	0	39.9		1.4	91.3	7.2		22.9	0	77.1		
Total %	1.1	35	0.5	36.5	6.1	0	4	10.1	0.7	45.6	3.6	49.9	0.8	0	2.6	3.4	

	Bryant Street Southbound				Carter Street Westbound				Bryant Street Northbound				Carter Street Eastbound				
Start Time	Left	Thru	Right	App. Total	Left	Thru	Right	App. Total	Left	Thru	Right	App. Total	Left	Thru	Right	App. Total	Int. Total
Peak Hour Analysis From 07:00 AM to 08:45 AM - Peak 1 of 1																	
Peak Hour for Entire Intersection Begins at 07:15 AM																	
07:15 AM	0	81	**1**	82	**21**	0	9	**30**	1	90	0	91	**3**	0	**5**	**8**	211
07:30 AM	0	**91**	0	**91**	17	0	**12**	29	1	103	10	114	1	0	5	6	**240**
07:45 AM	**1**	80	0	81	9	0	7	16	1	**112**	9	**122**	3	0	5	8	227
08:00 AM	1	45	1	47	4	0	5	9	**2**	99	**11**	112	1	0	1	2	170
Total Volume	2	297	2	301	51	0	33	84	5	404	30	439	8	0	16	24	848
% App. Total	0.7	98.7	0.7		60.7	0	39.3		1.1	92	6.8		33.3	0	66.7		
PHF	.500	.816	.500	.827	.607	.000	.688	.700	.625	.902	.682	.900	.667	.000	.800	.750	.883

Counts Unlimited, Inc.
PO Box 1178
Corona, CA 92878
(951)268-6268

City of Yucaipa
N/S: Bryant Street
E/W: Carter Street
Weather: Clear

File Name : YUCBRCAAM
Site Code : 19515541
Start Date : 9/29/2015
Page No : 2

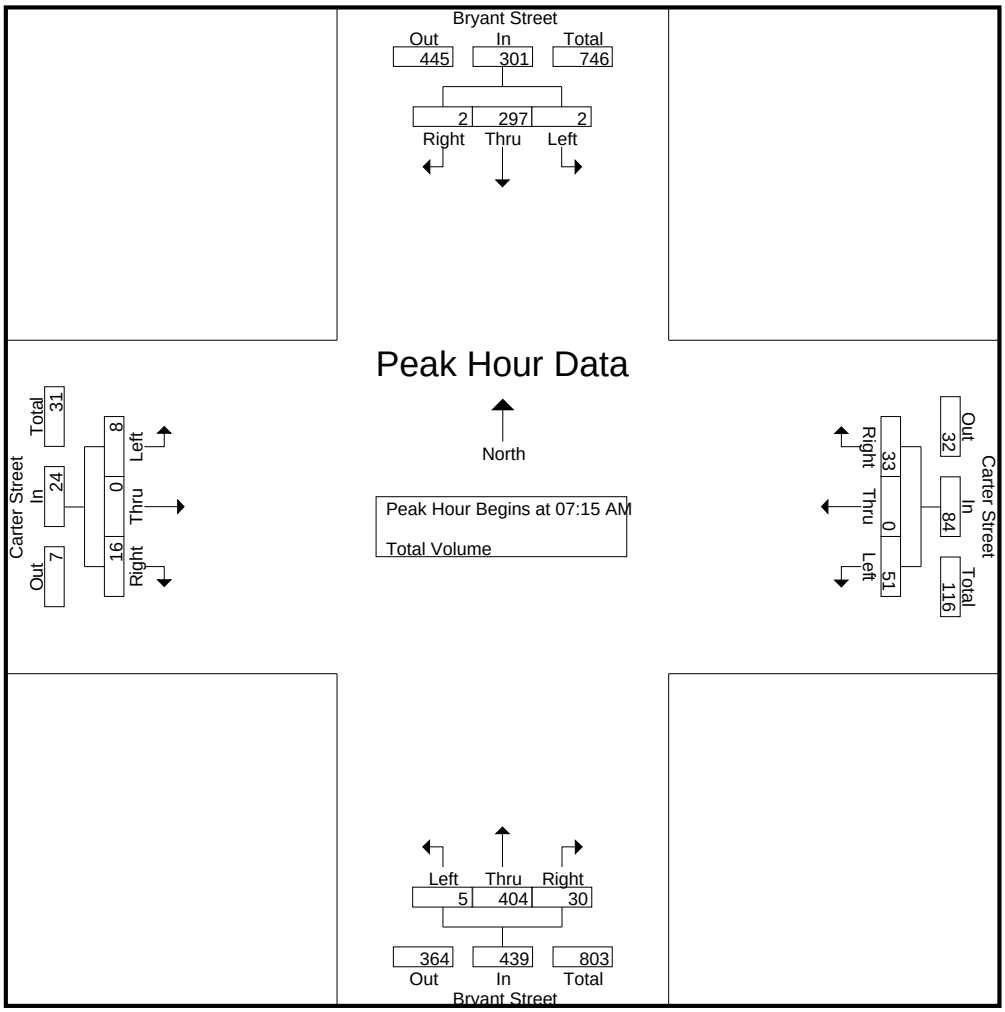

Peak Hour Analysis From 07:00 AM to 08:45 AM - Peak 1 of 1
Peak Hour for Each Approach Begins at:

	07:00 AM				07:00 AM				07:15 AM				07:00 AM			
+0 mins.	**1**	53	**1**	55	10	0	9	19	1	90	0	91	**3**	0	**7**	**10**
+15 mins.	0	81	1	82	**21**	0	9	**30**	1	103	10	114	3	0	5	8
+30 mins.	0	**91**	0	**91**	17	0	**12**	29	1	**112**	9	**122**	1	0	5	6
+45 mins.	1	80	0	81	9	0	7	16	**2**	99	**11**	112	3	0	5	8
Total Volume	2	305	2	309	57	0	37	94	5	404	30	439	10	0	22	32
% App. Total	0.6	98.7	0.6		60.6	0	39.4		1.1	92	6.8		31.2	0	68.8	
PHF	.500	.838	.500	.849	.679	.000	.771	.783	.625	.902	.682	.900	.833	.000	.786	.800

Counts Unlimited, Inc.
PO Box 1178
Corona, CA 92878
(951)268-6268

City of Yucaipa
N/S: Bryant Street
E/W: Carter Street
Weather: Clear

File Name : YUCBRCAPM
Site Code : 19515541
Start Date : 9/29/2015
Page No : 1

Groups Printed- Total Volume

	Bryant Street Southbound				Carter Street Westbound				Bryant Street Northbound				Carter Street Eastbound				
Start Time	Left	Thru	Right	App. Total	Left	Thru	Right	App. Total	Left	Thru	Right	App. Total	Left	Thru	Right	App. Total	Int. Total
04:00 PM	3	71	1	75	7	0	5	12	3	58	12	73	2	0	4	6	166
04:15 PM	3	80	1	84	9	0	3	12	5	60	9	74	0	0	2	2	172
04:30 PM	1	80	3	84	6	0	4	10	4	72	9	85	1	0	3	4	183
04:45 PM	8	83	0	91	8	0	3	11	4	54	6	64	0	0	1	1	167
Total	15	314	5	334	30	0	15	45	16	244	36	296	3	0	10	13	688
05:00 PM	7	99	0	106	9	0	2	11	4	67	9	80	0	0	1	1	198
05:15 PM	6	101	0	107	12	0	1	13	3	77	5	85	0	0	3	3	208
05:30 PM	6	77	3	86	8	0	2	10	5	67	8	80	0	0	2	2	178
05:45 PM	6	90	1	97	5	0	2	7	6	55	13	74	3	0	6	9	187
Total	25	367	4	396	34	0	7	41	18	266	35	319	3	0	12	15	771
Grand Total	40	681	9	730	64	0	22	86	34	510	71	615	6	0	22	28	1459
Apprch %	5.5	93.3	1.2		74.4	0	25.6		5.5	82.9	11.5		21.4	0	78.6		
Total %	2.7	46.7	0.6	50	4.4	0	1.5	5.9	2.3	35	4.9	42.2	0.4	0	1.5	1.9	

	Bryant Street Southbound				Carter Street Westbound				Bryant Street Northbound				Carter Street Eastbound				
Start Time	Left	Thru	Right	App. Total	Left	Thru	Right	App. Total	Left	Thru	Right	App. Total	Left	Thru	Right	App. Total	Int. Total
Peak Hour Analysis From 04:00 PM to 05:45 PM - Peak 1 of 1																	
Peak Hour for Entire Intersection Begins at 05:00 PM																	
05:00 PM	**7**	99	0	106	9	0	**2**	11	4	67	9	80	0	0	1	1	198
05:15 PM	6	**101**	0	**107**	**12**	0	1	**13**	3	**77**	5	**85**	0	0	3	3	**208**
05:30 PM	6	77	**3**	86	8	0	2	10	5	67	8	80	0	0	2	2	178
05:45 PM	6	90	1	97	5	0	2	7	**6**	55	**13**	74	**3**	0	**6**	**9**	187
Total Volume	25	367	4	396	34	0	7	41	18	266	35	319	3	0	12	15	771
% App. Total	6.3	92.7	1		82.9	0	17.1		5.6	83.4	11		20	0	80		
PHF	.893	.908	.333	.925	.708	.000	.875	.788	.750	.864	.673	.938	.250	.000	.500	.417	.927

Counts Unlimited, Inc.
PO Box 1178
Corona, CA 92878
(951)268-6268

City of Yucaipa
N/S: Bryant Street
E/W: Carter Street
Weather: Clear

File Name : YUCBRCAPM
Site Code : 19515541
Start Date : 9/29/2015
Page No : 2

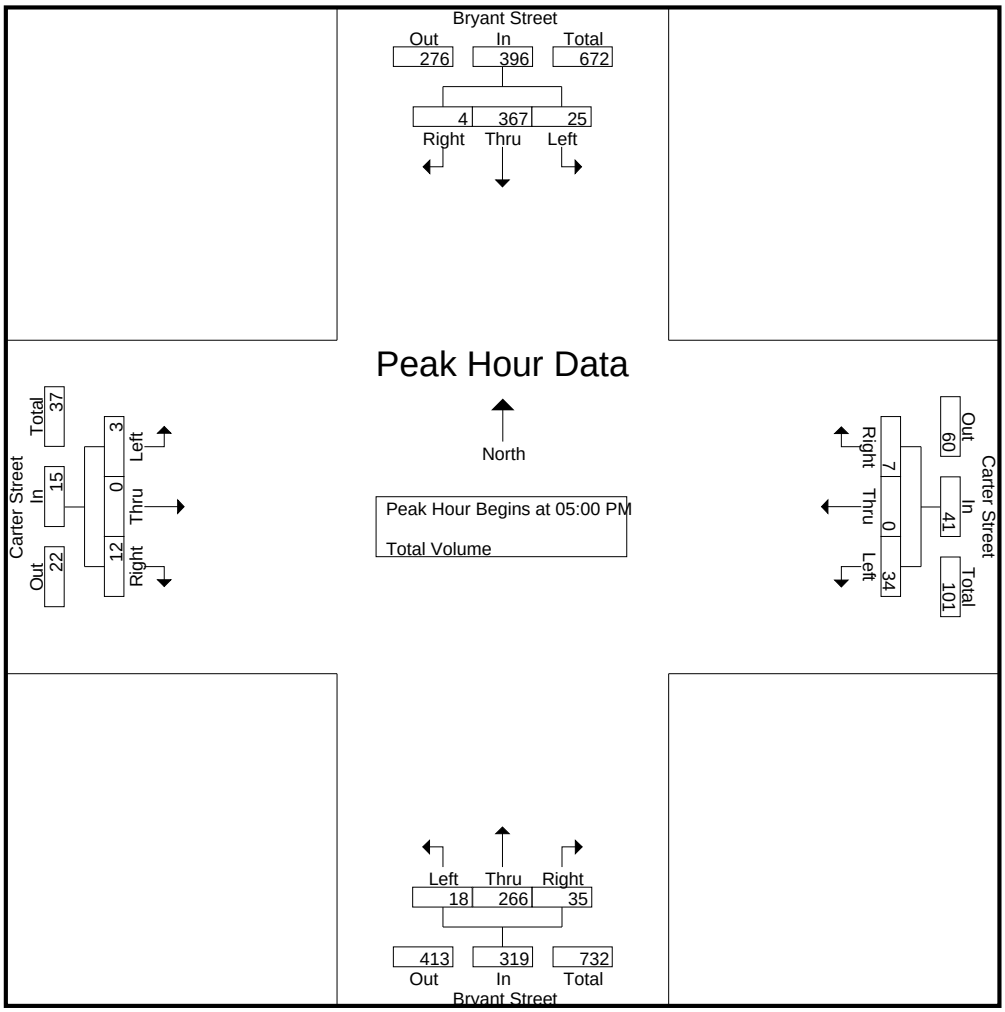

Peak Hour Analysis From 04:00 PM to 05:45 PM - Peak 1 of 1
Peak Hour for Each Approach Begins at:

	05:00 PM				04:00 PM				05:00 PM				05:00 PM			
+0 mins.	**7**	99	0	106	7	0	**5**	**12**	4	67	9	80	0	0	1	1
+15 mins.	6	**101**	0	**107**	**9**	0	3	12	3	**77**	5	**85**	0	0	3	3
+30 mins.	6	77	**3**	86	6	0	4	10	5	67	8	80	0	0	2	2
+45 mins.	6	90	1	97	8	0	3	11	**6**	55	**13**	74	**3**	0	**6**	**9**
Total Volume	25	367	4	396	30	0	15	45	18	266	35	319	3	0	12	15
% App. Total	6.3	92.7	1		66.7	0	33.3		5.6	83.4	11		20	0	80	
PHF	.893	.908	.333	.925	.833	.000	.750	.938	.750	.864	.673	.938	.250	.000	.500	.417

Counts Unlimited, Inc.
PO Box 1178
Corona, CA 92878
(951)268-6268

City of Yucaipa
N/S: Bryant Street
E/W: Fir Avenue
Weather: Clear

File Name : YUCBRFIAM
Site Code : 19515541
Start Date : 9/29/2015
Page No : 1

Groups Printed- Total Volume

	Bryant Street Southbound				Fir Avenue Westbound				Bryant Street Northbound				Fir Avenue Eastbound				
Start Time	Left	Thru	Right	App. Total	Left	Thru	Right	App. Total	Left	Thru	Right	App. Total	Left	Thru	Right	App. Total	Int. Total
07:00 AM	0	75	3	78	11	1	1	13	4	77	4	85	0	0	16	16	192
07:15 AM	1	102	5	108	11	5	2	18	23	54	1	78	14	0	23	37	241
07:30 AM	1	125	4	130	9	7	4	20	69	77	1	147	16	6	70	92	389
07:45 AM	0	101	6	107	8	4	1	13	99	103	7	209	18	4	109	131	460
Total	2	403	18	423	39	17	8	64	195	311	13	519	48	10	218	276	1282
08:00 AM	2	57	2	61	7	0	1	8	50	88	2	140	12	5	92	109	318
08:15 AM	0	60	0	60	10	1	1	12	7	59	3	69	8	3	17	28	169
08:30 AM	1	74	0	75	9	1	0	10	7	55	4	66	1	0	8	9	160
08:45 AM	0	66	0	66	3	1	1	5	5	50	5	60	5	1	8	14	145
Total	3	257	2	262	29	3	3	35	69	252	14	335	26	9	125	160	792
Grand Total	5	660	20	685	68	20	11	99	264	563	27	854	74	19	343	436	2074
Apprch %	0.7	96.4	2.9		68.7	20.2	11.1		30.9	65.9	3.2		17	4.4	78.7		
Total %	0.2	31.8	1	33	3.3	1	0.5	4.8	12.7	27.1	1.3	41.2	3.6	0.9	16.5	21	

	Bryant Street Southbound				Fir Avenue Westbound				Bryant Street Northbound				Fir Avenue Eastbound				
Start Time	Left	Thru	Right	App. Total	Left	Thru	Right	App. Total	Left	Thru	Right	App. Total	Left	Thru	Right	App. Total	Int. Total
Peak Hour Analysis From 07:00 AM to 08:45 AM - Peak 1 of 1																	
Peak Hour for Entire Intersection Begins at 07:15 AM																	
07:15 AM	1	102	5	108	**11**	5	2	18	23	54	1	78	14	0	23	37	241
07:30 AM	1	**125**	4	**130**	9	**7**	**4**	**20**	69	77	1	147	16	**6**	70	92	389
07:45 AM	0	101	**6**	107	8	4	1	13	**99**	**103**	**7**	**209**	**18**	4	**109**	**131**	**460**
08:00 AM	**2**	57	2	61	7	0	1	8	50	88	2	140	12	5	92	109	318
Total Volume	4	385	17	406	35	16	8	59	241	322	11	574	60	15	294	369	1408
% App. Total	1	94.8	4.2		59.3	27.1	13.6		42	56.1	1.9		16.3	4.1	79.7		
PHF	.500	.770	.708	.781	.795	.571	.500	.738	.609	.782	.393	.687	.833	.625	.674	.704	.765

Counts Unlimited, Inc.
PO Box 1178
Corona, CA 92878
(951)268-6268

City of Yucaipa
N/S: Bryant Street
E/W: Fir Avenue
Weather: Clear

File Name : YUCBRFIAM
Site Code : 19515541
Start Date : 9/29/2015
Page No : 2

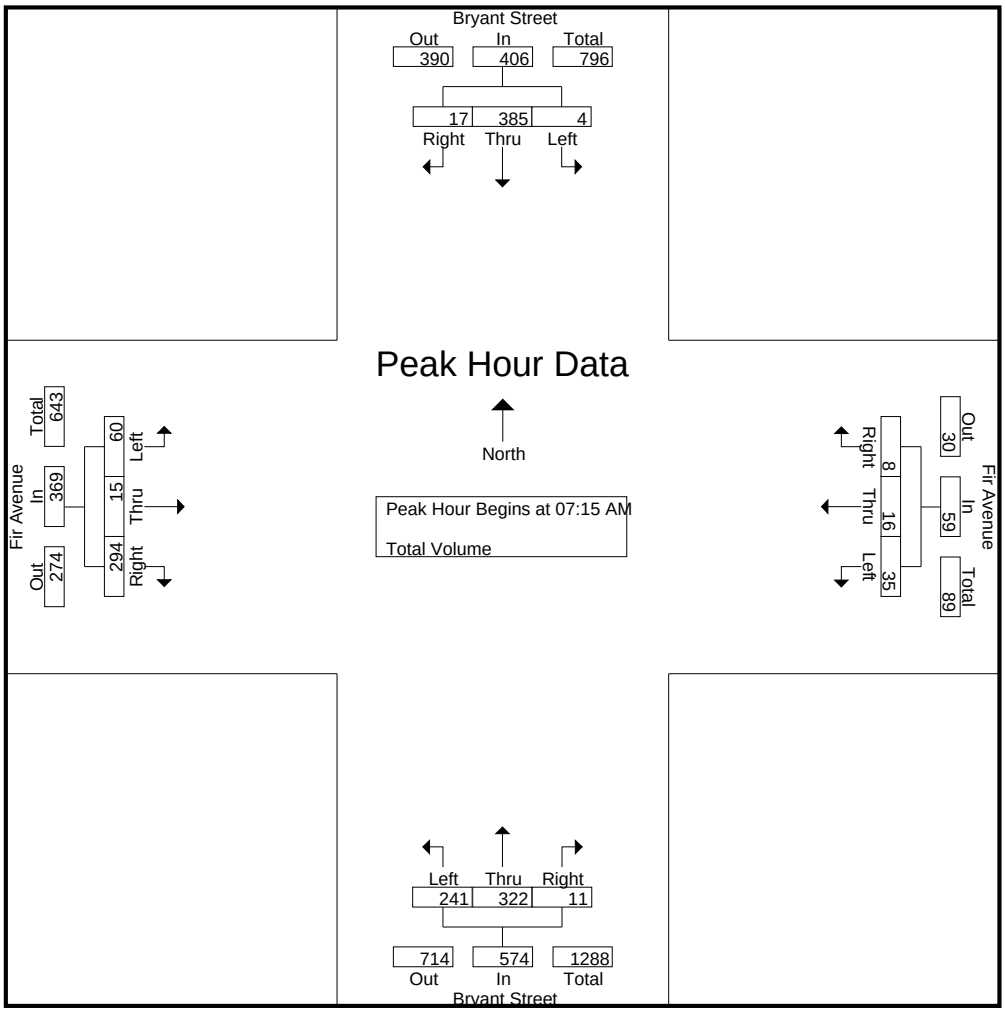

Peak Hour Analysis From 07:00 AM to 08:45 AM - Peak 1 of 1
Peak Hour for Each Approach Begins at:

	07:00 AM				07:00 AM				07:15 AM				07:15 AM			
+0 mins.	0	75	3	78	**11**	1	1	13	23	54	1	78	14	0	23	37
+15 mins.	**1**	102	5	108	11	5	2	18	69	77	1	147	16	**6**	70	92
+30 mins.	1	**125**	4	**130**	9	**7**	**4**	**20**	**99**	**103**	**7**	**209**	**18**	4	**109**	**131**
+45 mins.	0	101	**6**	107	8	4	1	13	50	88	2	140	12	5	92	109
Total Volume	2	403	18	423	39	17	8	64	241	322	11	574	60	15	294	369
% App. Total	0.5	95.3	4.3		60.9	26.6	12.5		42	56.1	1.9		16.3	4.1	79.7	
PHF	.500	.806	.750	.813	.886	.607	.500	.800	.609	.782	.393	.687	.833	.625	.674	.704

Counts Unlimited, Inc.
PO Box 1178
Corona, CA 92878
(951)268-6268

City of Yucaipa
N/S: Bryant Street
E/W: Fir Avenue
Weather: Clear

File Name : YUCBRFIPM
Site Code : 19515541
Start Date : 9/29/2015
Page No : 1

Groups Printed- Total Volume

	Bryant Street Southbound				Fir Avenue Westbound				Bryant Street Northbound				Fir Avenue Eastbound				
Start Time	Left	Thru	Right	App. Total	Left	Thru	Right	App. Total	Left	Thru	Right	App. Total	Left	Thru	Right	App. Total	Int. Total
04:00 PM	0	65	5	70	6	0	0	6	8	82	3	93	2	1	8	11	180
04:15 PM	0	79	9	88	7	0	1	8	10	81	8	99	0	0	4	4	199
04:30 PM	1	88	3	92	4	0	0	4	6	95	9	110	6	0	6	12	218
04:45 PM	0	111	2	113	6	0	2	8	8	81	5	94	1	1	3	5	220
Total	1	343	19	363	23	0	3	26	32	339	25	396	9	2	21	32	817
05:00 PM	1	102	5	108	3	0	1	4	5	91	8	104	3	3	12	18	234
05:15 PM	1	110	6	117	7	1	0	8	11	92	11	114	0	0	8	8	247
05:30 PM	3	84	1	88	5	1	3	9	10	85	8	103	4	1	6	11	211
05:45 PM	1	98	5	104	4	1	0	5	6	84	10	100	5	1	5	11	220
Total	6	394	17	417	19	3	4	26	32	352	37	421	12	5	31	48	912
Grand Total	7	737	36	780	42	3	7	52	64	691	62	817	21	7	52	80	1729
Apprch %	0.9	94.5	4.6		80.8	5.8	13.5		7.8	84.6	7.6		26.2	8.8	65		
Total %	0.4	42.6	2.1	45.1	2.4	0.2	0.4	3	3.7	40	3.6	47.3	1.2	0.4	3	4.6	

	Bryant Street Southbound				Fir Avenue Westbound				Bryant Street Northbound				Fir Avenue Eastbound				
Start Time	Left	Thru	Right	App. Total	Left	Thru	Right	App. Total	Left	Thru	Right	App. Total	Left	Thru	Right	App. Total	Int. Total
Peak Hour Analysis From 04:00 PM to 05:45 PM - Peak 1 of 1																	
Peak Hour for Entire Intersection Begins at 04:30 PM																	
04:30 PM	**1**	88	3	92	4	0	0	4	6	**95**	9	110	**6**	0	6	12	218
04:45 PM	0	**111**	2	113	6	0	**2**	**8**	8	81	5	94	1	1	3	5	220
05:00 PM	1	102	5	108	3	0	1	4	5	91	8	104	3	**3**	**12**	**18**	234
05:15 PM	1	110	**6**	**117**	**7**	**1**	0	8	**11**	92	**11**	**114**	0	0	8	8	**247**
Total Volume	3	411	16	430	20	1	3	24	30	359	33	422	10	4	29	43	919
% App. Total	0.7	95.6	3.7		83.3	4.2	12.5		7.1	85.1	7.8		23.3	9.3	67.4		
PHF	.750	.926	.667	.919	.714	.250	.375	.750	.682	.945	.750	.925	.417	.333	.604	.597	.930

Counts Unlimited, Inc.
PO Box 1178
Corona, CA 92878
(951)268-6268

City of Yucaipa
N/S: Bryant Street
E/W: Fir Avenue
Weather: Clear

File Name : YUCBRFIPM
Site Code : 19515541
Start Date : 9/29/2015
Page No : 2

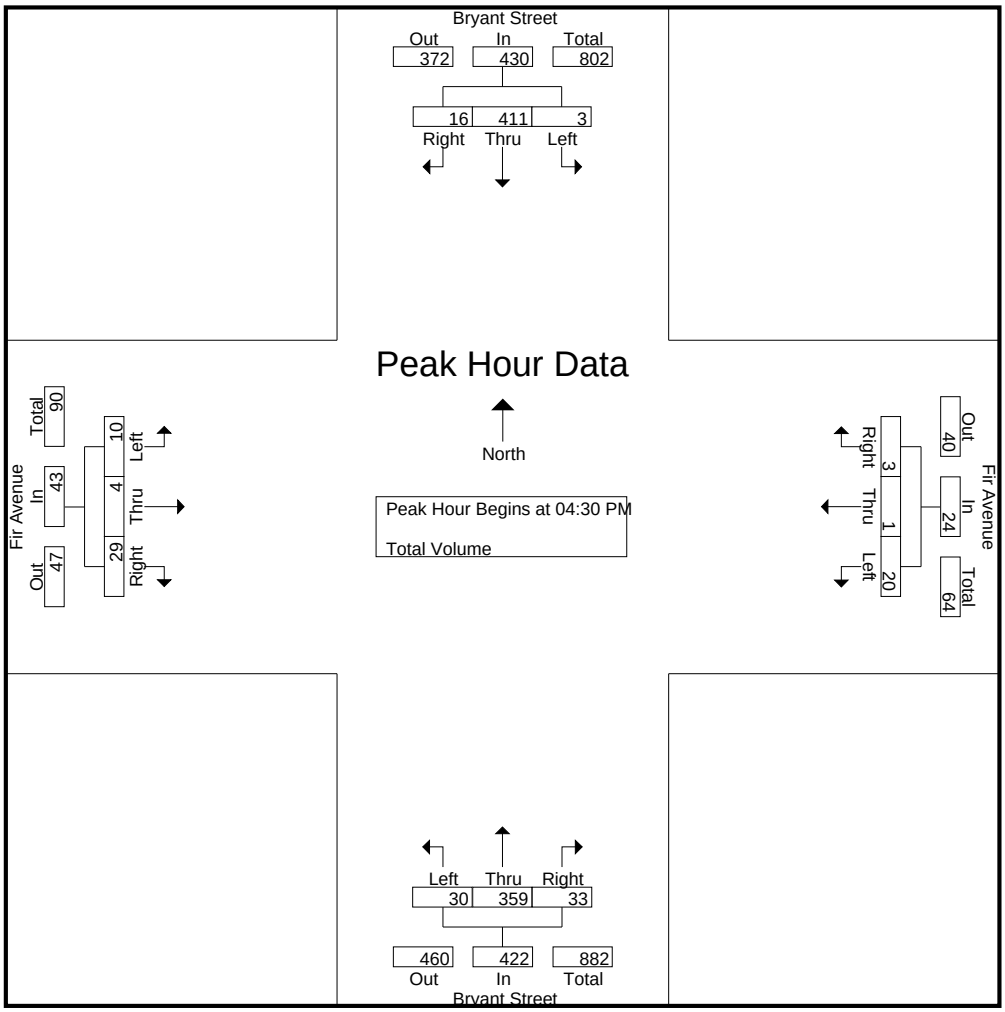

Peak Hour Analysis From 04:00 PM to 05:45 PM - Peak 1 of 1
Peak Hour for Each Approach Begins at:

	04:30 PM				04:45 PM				04:30 PM				05:00 PM			
+0 mins.	**1**	88	3	92	6	0	2	8	6	**95**	9	110	3	**3**	**12**	**18**
+15 mins.	0	**111**	2	113	3	0	1	4	8	81	5	94	0	0	8	8
+30 mins.	1	102	5	108	**7**	**1**	0	8	5	91	8	104	4	1	6	11
+45 mins.	1	110	**6**	**117**	5	1	**3**	**9**	**11**	92	**11**	**114**	**5**	1	5	11
Total Volume	3	411	16	430	21	2	6	29	30	359	33	422	12	5	31	48
% App. Total	0.7	95.6	3.7		72.4	6.9	20.7		7.1	85.1	7.8		25	10.4	64.6	
PHF	.750	.926	.667	.919	.750	.500	.500	.806	.682	.945	.750	.925	.600	.417	.646	.667

Counts Unlimited, Inc.
PO Box 1178
Corona, CA 92878
(951)268-6268

City of Yucaipa
N/S: Bryant Street
E/W: Oak Glen Road
Weather: Clear

File Name : YUCBROAAM
Site Code : 19515541
Start Date : 9/29/2015
Page No : 1

Groups Printed- Total Volume

	Bryant Street Southbound				Oak Glen Road Westbound				Bryant Street Northbound				Oak Glen Road Eastbound				
Start Time	Left	Thru	Right	App. Total	Left	Thru	Right	App. Total	Left	Thru	Right	App. Total	Left	Thru	Right	App. Total	Int. Total
07:00 AM	6	39	79	124	5	43	6	54	66	66	9	141	12	8	15	35	354
07:15 AM	6	55	128	189	11	68	13	92	94	56	9	159	15	7	27	49	489
07:30 AM	5	88	132	225	12	68	16	96	82	96	16	194	41	23	65	129	644
07:45 AM	10	133	108	251	10	57	12	79	81	123	19	223	88	39	75	202	755
Total	27	315	447	789	38	236	47	321	323	341	53	717	156	77	182	415	2242
08:00 AM	10	77	71	158	12	20	9	41	56	83	9	148	56	26	97	179	526
08:15 AM	7	42	59	108	3	23	8	34	33	37	7	77	25	18	39	82	301
08:30 AM	7	50	57	114	12	23	12	47	34	36	7	77	28	20	15	63	301
08:45 AM	5	36	51	92	6	28	2	36	51	42	12	105	27	18	22	67	300
Total	29	205	238	472	33	94	31	158	174	198	35	407	136	82	173	391	1428
Grand Total	56	520	685	1261	71	330	78	479	497	539	88	1124	292	159	355	806	3670
Apprch %	4.4	41.2	54.3		14.8	68.9	16.3		44.2	48	7.8		36.2	19.7	44		
Total %	1.5	14.2	18.7	34.4	1.9	9	2.1	13.1	13.5	14.7	2.4	30.6	8	4.3	9.7	22	

	Bryant Street Southbound				Oak Glen Road Westbound				Bryant Street Northbound				Oak Glen Road Eastbound				
Start Time	Left	Thru	Right	App. Total	Left	Thru	Right	App. Total	Left	Thru	Right	App. Total	Left	Thru	Right	App. Total	Int. Total
Peak Hour Analysis From 07:00 AM to 08:45 AM - Peak 1 of 1																	
Peak Hour for Entire Intersection Begins at 07:15 AM																	
07:15 AM	6	55	128	189	11	**68**	13	92	**94**	56	9	159	15	7	27	49	489
07:30 AM	5	88	**132**	225	**12**	68	**16**	**96**	82	96	16	194	41	23	65	129	644
07:45 AM	**10**	**133**	108	**251**	10	57	12	79	81	**123**	**19**	**223**	**88**	**39**	75	**202**	**755**
08:00 AM	10	77	71	158	12	20	9	41	56	83	9	148	56	26	**97**	179	526
Total Volume	31	353	439	823	45	213	50	308	313	358	53	724	200	95	264	559	2414
% App. Total	3.8	42.9	53.3		14.6	69.2	16.2		43.2	49.4	7.3		35.8	17	47.2		
PHF	.775	.664	.831	.820	.938	.783	.781	.802	.832	.728	.697	.812	.568	.609	.680	.692	.799

Counts Unlimited, Inc.
PO Box 1178
Corona, CA 92878
(951)268-6268

City of Yucaipa
N/S: Bryant Street
E/W: Oak Glen Road
Weather: Clear

File Name : YUCBROAAM
Site Code : 19515541
Start Date : 9/29/2015
Page No : 2

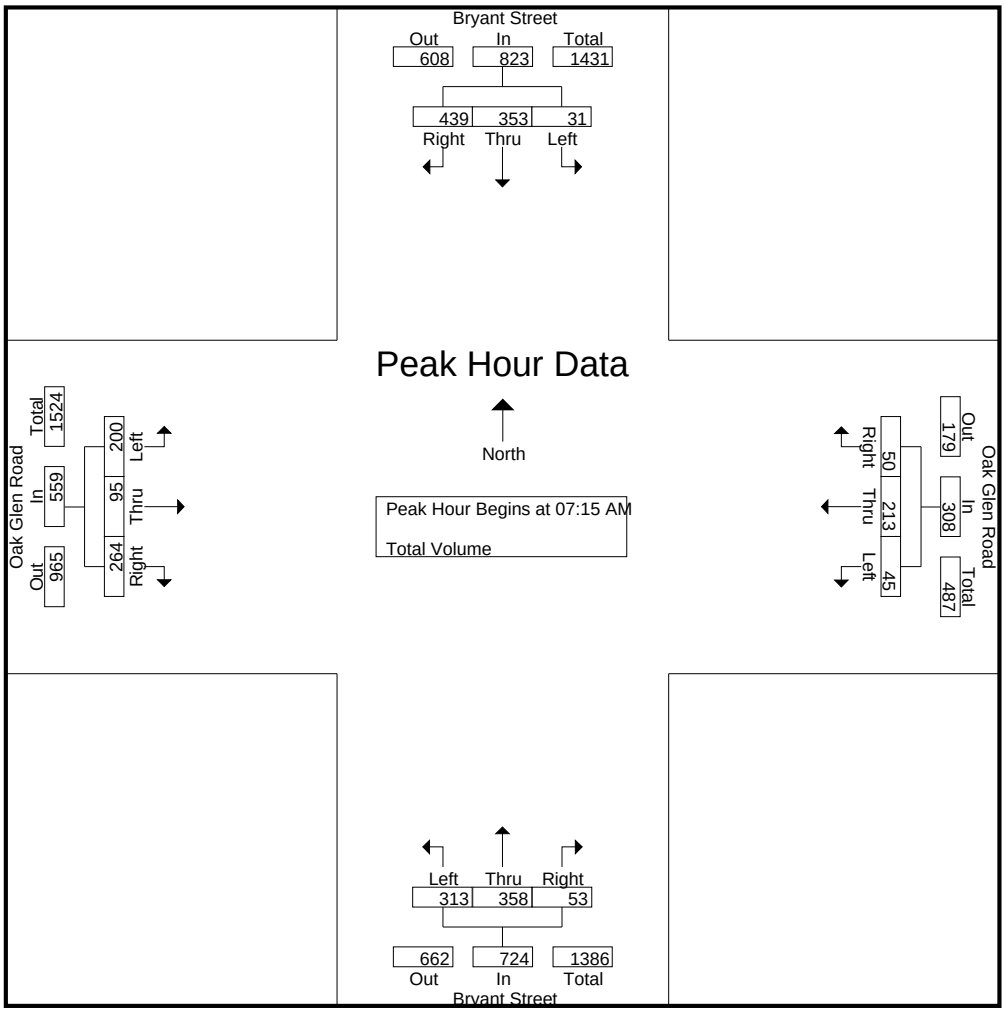

Peak Hour Analysis From 07:00 AM to 08:45 AM - Peak 1 of 1
Peak Hour for Each Approach Begins at:

	07:15 AM				07:00 AM				07:15 AM				07:30 AM			
+0 mins.	6	55	128	189	5	43	6	54	**94**	56	9	159	41	23	65	129
+15 mins.	5	88	**132**	225	11	**68**	13	92	82	96	16	194	**88**	**39**	75	**202**
+30 mins.	**10**	**133**	108	**251**	**12**	68	**16**	**96**	81	**123**	**19**	**223**	56	26	**97**	179
+45 mins.	10	77	71	158	10	57	12	79	56	83	9	148	25	18	39	82
Total Volume	31	353	439	823	38	236	47	321	313	358	53	724	210	106	276	592
% App. Total	3.8	42.9	53.3		11.8	73.5	14.6		43.2	49.4	7.3		35.5	17.9	46.6	
PHF	.775	.664	.831	.820	.792	.868	.734	.836	.832	.728	.697	.812	.597	.679	.711	.733

Counts Unlimited, Inc.
PO Box 1178
Corona, CA 92878
(951)268-6268

City of Yucaipa
N/S: Bryant Street
E/W: Oak Glen Road
Weather: Clear

File Name : YUCBROAPM
Site Code : 19515541
Start Date : 9/29/2015
Page No : 1

Groups Printed- Total Volume

	Bryant Street Southbound				Oak Glen Road Westbound				Bryant Street Northbound				Oak Glen Road Eastbound				
Start Time	Left	Thru	Right	App. Total	Left	Thru	Right	App. Total	Left	Thru	Right	App. Total	Left	Thru	Right	App. Total	Int. Total
04:00 PM	7	49	40	96	10	23	15	48	27	47	5	79	55	37	51	143	366
04:15 PM	6	49	43	98	13	21	14	48	50	50	7	107	57	38	51	146	399
04:30 PM	16	56	49	121	12	20	9	41	34	64	9	107	56	38	49	143	412
04:45 PM	8	65	47	120	11	25	9	45	31	50	11	92	46	31	54	131	388
Total	37	219	179	435	46	89	47	182	142	211	32	385	214	144	205	563	1565
05:00 PM	10	65	45	120	14	35	14	63	41	55	15	111	60	42	42	144	438
05:15 PM	13	71	53	137	9	19	15	43	55	59	7	121	73	39	56	168	469
05:30 PM	10	47	53	110	10	33	21	64	44	46	17	107	62	43	68	173	454
05:45 PM	8	78	45	131	15	20	15	50	32	43	9	84	75	45	55	175	440
Total	41	261	196	498	48	107	65	220	172	203	48	423	270	169	221	660	1801
Grand Total	78	480	375	933	94	196	112	402	314	414	80	808	484	313	426	1223	3366
Apprch %	8.4	51.4	40.2		23.4	48.8	27.9		38.9	51.2	9.9		39.6	25.6	34.8		
Total %	2.3	14.3	11.1	27.7	2.8	5.8	3.3	11.9	9.3	12.3	2.4	24	14.4	9.3	12.7	36.3	

	Bryant Street Southbound				Oak Glen Road Westbound				Bryant Street Northbound				Oak Glen Road Eastbound				
Start Time	Left	Thru	Right	App. Total	Left	Thru	Right	App. Total	Left	Thru	Right	App. Total	Left	Thru	Right	App. Total	Int. Total
Peak Hour Analysis From 04:00 PM to 05:45 PM - Peak 1 of 1																	
Peak Hour for Entire Intersection Begins at 05:00 PM																	
05:00 PM	10	65	45	120	14	**35**	14	63	41	55	15	111	60	42	42	144	438
05:15 PM	**13**	71	**53**	**137**	9	19	15	43	**55**	**59**	7	**121**	73	39	56	168	**469**
05:30 PM	10	47	53	110	10	33	**21**	**64**	44	46	**17**	107	62	43	**68**	173	454
05:45 PM	8	**78**	45	131	**15**	20	15	50	32	43	9	84	**75**	**45**	55	**175**	440
Total Volume	41	261	196	498	48	107	65	220	172	203	48	423	270	169	221	660	1801
% App. Total	8.2	52.4	39.4		21.8	48.6	29.5		40.7	48	11.3		40.9	25.6	33.5		
PHF	.788	.837	.925	.909	.800	.764	.774	.859	.782	.860	.706	.874	.900	.939	.813	.943	.960

Counts Unlimited, Inc.
PO Box 1178
Corona, CA 92878
(951)268-6268

City of Yucaipa
N/S: Bryant Street
E/W: Oak Glen Road
Weather: Clear

File Name : YUCBROAPM
Site Code : 19515541
Start Date : 9/29/2015
Page No : 2

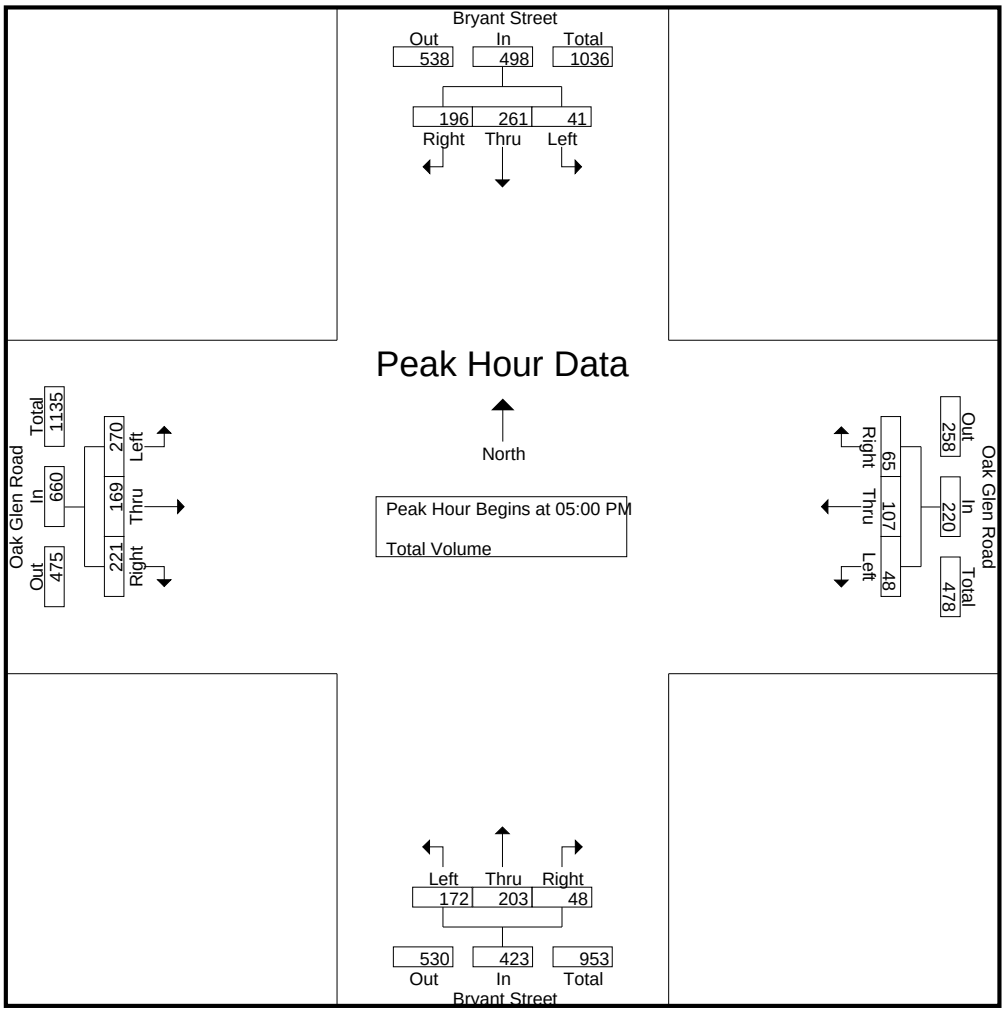

Peak Hour Analysis From 04:00 PM to 05:45 PM - Peak 1 of 1
Peak Hour for Each Approach Begins at:

	04:30 PM				05:00 PM				04:30 PM				05:00 PM			
+0 mins.	**16**	56	49	121	14	**35**	14	63	34	**64**	9	107	60	42	42	144
+15 mins.	8	65	47	120	9	19	15	43	31	50	11	92	73	39	56	168
+30 mins.	10	65	45	120	10	33	**21**	**64**	41	55	**15**	111	62	43	**68**	173
+45 mins.	13	**71**	**53**	**137**	**15**	20	15	50	**55**	59	7	**121**	**75**	**45**	55	**175**
Total Volume	47	257	194	498	48	107	65	220	161	228	42	431	270	169	221	660
% App. Total	9.4	51.6	39		21.8	48.6	29.5		37.4	52.9	9.7		40.9	25.6	33.5	
PHF	.734	.905	.915	.909	.800	.764	.774	.859	.732	.891	.700	.890	.900	.939	.813	.943

Counts Unlimited, Inc.
PO Box 1178
Corona, CA 92878
(951)268-6268

City of Yucaipa
N/S: Casa Blanca Avenue
E/W: Oak Glen Road
Weather: Clear

File Name : YUCCAOAAM
Site Code : 19515541
Start Date : 9/29/2015
Page No : 1

Groups Printed- Total Volume

	Oak Glen Road Westbound			Casa Blanca Avenue Northbound			Oak Glen Road Eastbound			
Start Time	Left	Thru	App. Total	Left	Right	App. Total	Thru	Right	App. Total	Int. Total
07:00 AM	0	25	25	8	0	8	8	3	11	44
07:15 AM	0	18	18	11	0	11	5	1	6	35
07:30 AM	0	15	15	10	0	10	13	4	17	42
07:45 AM	0	21	21	8	0	8	18	2	20	49
Total	0	79	79	37	0	37	44	10	54	170
08:00 AM	0	13	13	4	0	4	20	6	26	43
08:15 AM	0	12	12	3	0	3	7	4	11	26
08:30 AM	0	14	14	4	0	4	15	8	23	41
08:45 AM	0	8	8	7	0	7	19	1	20	35
Total	0	47	47	18	0	18	61	19	80	145
Grand Total	0	126	126	55	0	55	105	29	134	315
Apprch %	0	100		100	0		78.4	21.6		
Total %	0	40	40	17.5	0	17.5	33.3	9.2	42.5	

	Oak Glen Road Westbound			Casa Blanca Avenue Northbound			Oak Glen Road Eastbound			
Start Time	Left	Thru	App. Total	Left	Right	App. Total	Thru	Right	App. Total	Int. Total
Peak Hour Analysis From 07:00 AM to 08:45 AM - Peak 1 of 1										
Peak Hour for Entire Intersection Begins at 07:00 AM										
07:00 AM	0	**25**	**25**	8	0	8	8	3	11	44
07:15 AM	0	18	18	**11**	0	**11**	5	1	6	35
07:30 AM	0	15	15	10	0	10	13	**4**	17	42
07:45 AM	0	21	21	8	0	8	**18**	2	**20**	**49**
Total Volume	0	79	79	37	0	37	44	10	54	170
% App. Total	0	100		100	0		81.5	18.5		
PHF	.000	.790	.790	.841	.000	.841	.611	.625	.675	.867

Counts Unlimited, Inc.
PO Box 1178
Corona, CA 92878
(951)268-6268

City of Yucaipa
N/S: Casa Blanca Avenue
E/W: Oak Glen Road
Weather: Clear

File Name : YUCCAOAAM
Site Code : 19515541
Start Date : 9/29/2015
Page No : 2

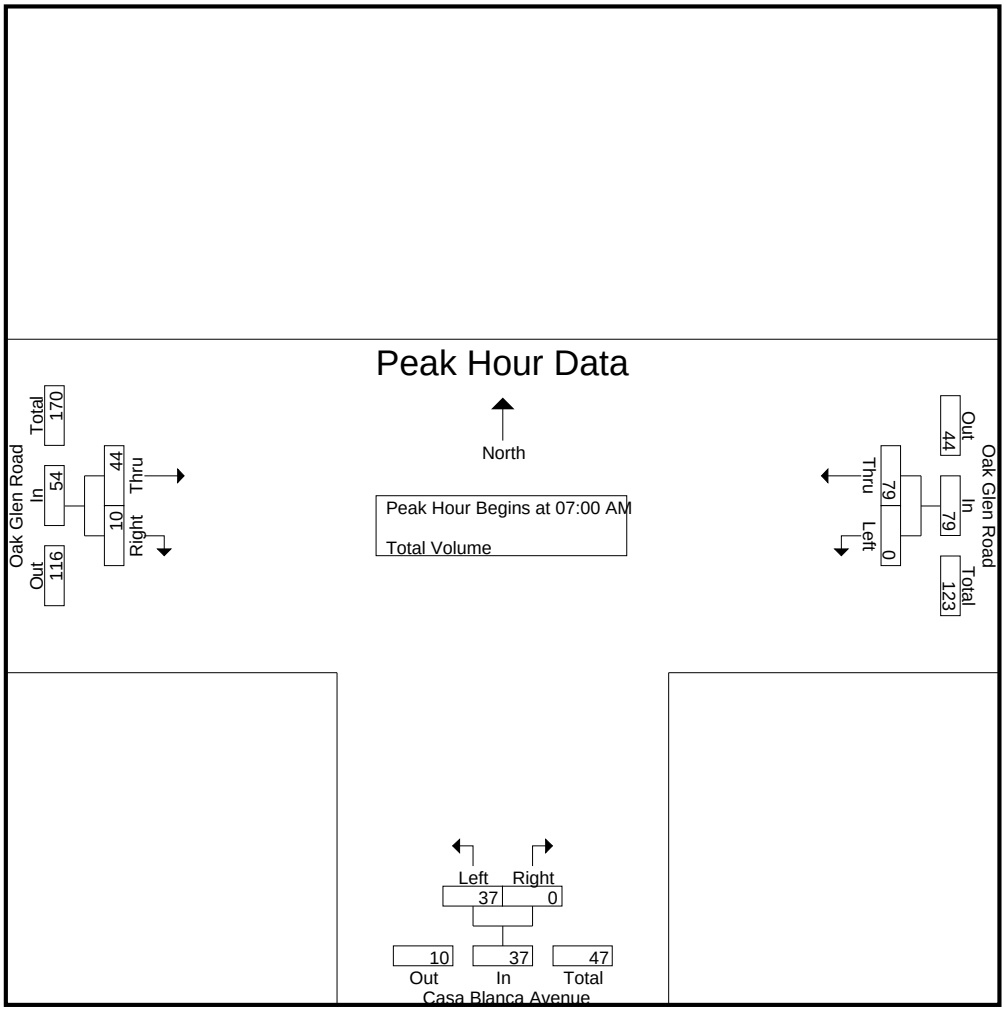

Peak Hour Analysis From 07:00 AM to 08:45 AM - Peak 1 of 1
Peak Hour for Each Approach Begins at:

	07:00 AM			07:00 AM			07:45 AM		
+0 mins.	0	**25**	**25**	8	0	8	18	2	20
+15 mins.	0	18	18	**11**	0	**11**	**20**	6	**26**
+30 mins.	0	15	15	10	0	10	7	4	11
+45 mins.	0	21	21	8	0	8	15	**8**	23
Total Volume	0	79	79	37	0	37	60	20	80
% App. Total	0	100		100	0		75	25	
PHF	.000	.790	.790	.841	.000	.841	.750	.625	.769

Counts Unlimited, Inc.
PO Box 1178
Corona, CA 92878
(951)268-6268

City of Yucaipa
N/S: Casa Blanca Avenue
E/W: Oak Glen Road
Weather: Clear

File Name : YUCCAOAPM
Site Code : 19515541
Start Date : 9/29/2015
Page No : 1

Groups Printed- Total Volume

	Oak Glen Road Westbound			Casa Blanca Avenue Northbound			Oak Glen Road Eastbound			
Start Time	Left	Thru	App. Total	Left	Right	App. Total	Thru	Right	App. Total	Int. Total
04:00 PM	0	15	15	6	0	6	22	4	26	47
04:15 PM	1	18	19	1	1	2	13	5	18	39
04:30 PM	0	18	18	5	0	5	23	6	29	52
04:45 PM	0	12	12	1	0	1	17	5	22	35
Total	1	63	64	13	1	14	75	20	95	173
05:00 PM	0	18	18	3	0	3	19	11	30	51
05:15 PM	0	20	20	5	0	5	15	13	28	53
05:30 PM	0	17	17	6	0	6	19	9	28	51
05:45 PM	1	14	15	6	0	6	17	9	26	47
Total	1	69	70	20	0	20	70	42	112	202
Grand Total	2	132	134	33	1	34	145	62	207	375
Apprch %	1.5	98.5		97.1	2.9		70	30		
Total %	0.5	35.2	35.7	8.8	0.3	9.1	38.7	16.5	55.2	

	Oak Glen Road Westbound			Casa Blanca Avenue Northbound			Oak Glen Road Eastbound			
Start Time	Left	Thru	App. Total	Left	Right	App. Total	Thru	Right	App. Total	Int. Total
Peak Hour Analysis From 04:00 PM to 05:45 PM - Peak 1 of 1										
Peak Hour for Entire Intersection Begins at 05:00 PM										
05:00 PM	0	18	18	3	0	3	**19**	11	**30**	51
05:15 PM	0	**20**	**20**	5	0	5	15	**13**	28	**53**
05:30 PM	0	17	17	**6**	0	**6**	19	9	28	51
05:45 PM	**1**	14	15	6	0	6	17	9	26	47
Total Volume	1	69	70	20	0	20	70	42	112	202
% App. Total	1.4	98.6		100	0		62.5	37.5		
PHF	.250	.863	.875	.833	.000	.833	.921	.808	.933	.953

Counts Unlimited, Inc.
PO Box 1178
Corona, CA 92878
(951)268-6268

City of Yucaipa
N/S: Casa Blanca Avenue
E/W: Oak Glen Road
Weather: Clear

File Name : YUCCAOAPM
Site Code : 19515541
Start Date : 9/29/2015
Page No : 2

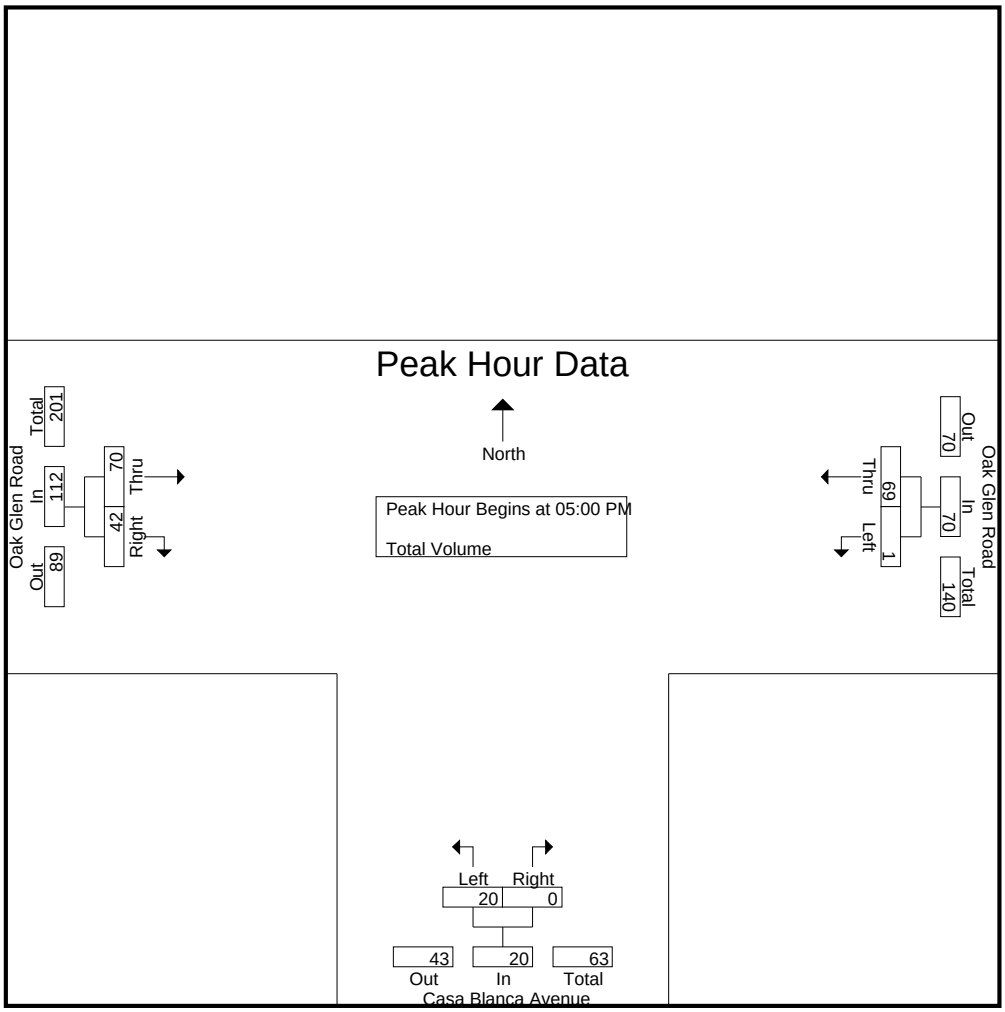

Peak Hour Analysis From 04:00 PM to 05:45 PM - Peak 1 of 1
Peak Hour for Each Approach Begins at:

	05:00 PM			05:00 PM			05:00 PM		
+0 mins.	0	18	18	3	0	3	**19**	11	**30**
+15 mins.	0	**20**	**20**	5	0	5	15	**13**	28
+30 mins.	0	17	17	**6**	0	**6**	19	9	28
+45 mins.	**1**	14	15	6	0	6	17	9	26
Total Volume	1	69	70	20	0	20	70	42	112
% App. Total	1.4	98.6		100	0		62.5	37.5	
PHF	.250	.863	.875	.833	.000	.833	.921	.808	.933

Counts Unlimited, Inc.
PO Box 1178
Corona, CA 92878
(951)268-6268

City of Yucaipa
N/S: Cherry Croft Drive
E/W: Oak Glen Road
Weather: Clear

File Name : YUCCHOAAM
Site Code : 19515541
Start Date : 9/29/2015
Page No : 1

Groups Printed- Total Volume

	Cherry Croft Drive Southbound			Oak Glen Road Westbound			Oak Glen Road Eastbound			
Start Time	Left	Right	App. Total	Thru	Right	App. Total	Left	Thru	App. Total	Int. Total
07:00 AM	0	0	0	40	0	40	0	10	10	50
07:15 AM	0	1	1	35	0	35	0	9	9	45
07:30 AM	0	0	0	28	0	28	0	18	18	46
07:45 AM	0	0	0	41	0	41	0	23	23	64
Total	0	1	1	144	0	144	0	60	60	205
08:00 AM	0	2	2	20	1	21	0	24	24	47
08:15 AM	0	0	0	18	1	19	0	14	14	33
08:30 AM	0	0	0	19	0	19	0	26	26	45
08:45 AM	0	0	0	17	0	17	0	17	17	34
Total	0	2	2	74	2	76	0	81	81	159
Grand Total	0	3	3	218	2	220	0	141	141	364
Apprch %	0	100		99.1	0.9		0	100		
Total %	0	0.8	0.8	59.9	0.5	60.4	0	38.7	38.7	

	Cherry Croft Drive Southbound			Oak Glen Road Westbound			Oak Glen Road Eastbound			
Start Time	Left	Right	App. Total	Thru	Right	App. Total	Left	Thru	App. Total	Int. Total
Peak Hour Analysis From 07:00 AM to 08:45 AM - Peak 1 of 1										
Peak Hour for Entire Intersection Begins at 07:00 AM										
07:00 AM	0	0	0	40	0	40	0	10	10	50
07:15 AM	0	**1**	**1**	35	0	35	0	9	9	45
07:30 AM	0	0	0	28	0	28	0	18	18	46
07:45 AM	0	0	0	**41**	0	**41**	0	**23**	**23**	**64**
Total Volume	0	1	1	144	0	144	0	60	60	205
% App. Total	0	100		100	0		0	100		
PHF	.000	.250	.250	.878	.000	.878	.000	.652	.652	.801

Counts Unlimited, Inc.
PO Box 1178
Corona, CA 92878
(951)268-6268

City of Yucaipa
N/S: Cherry Croft Drive
E/W: Oak Glen Road
Weather: Clear

File Name : YUCCHOAAM
Site Code : 19515541
Start Date : 9/29/2015
Page No : 2

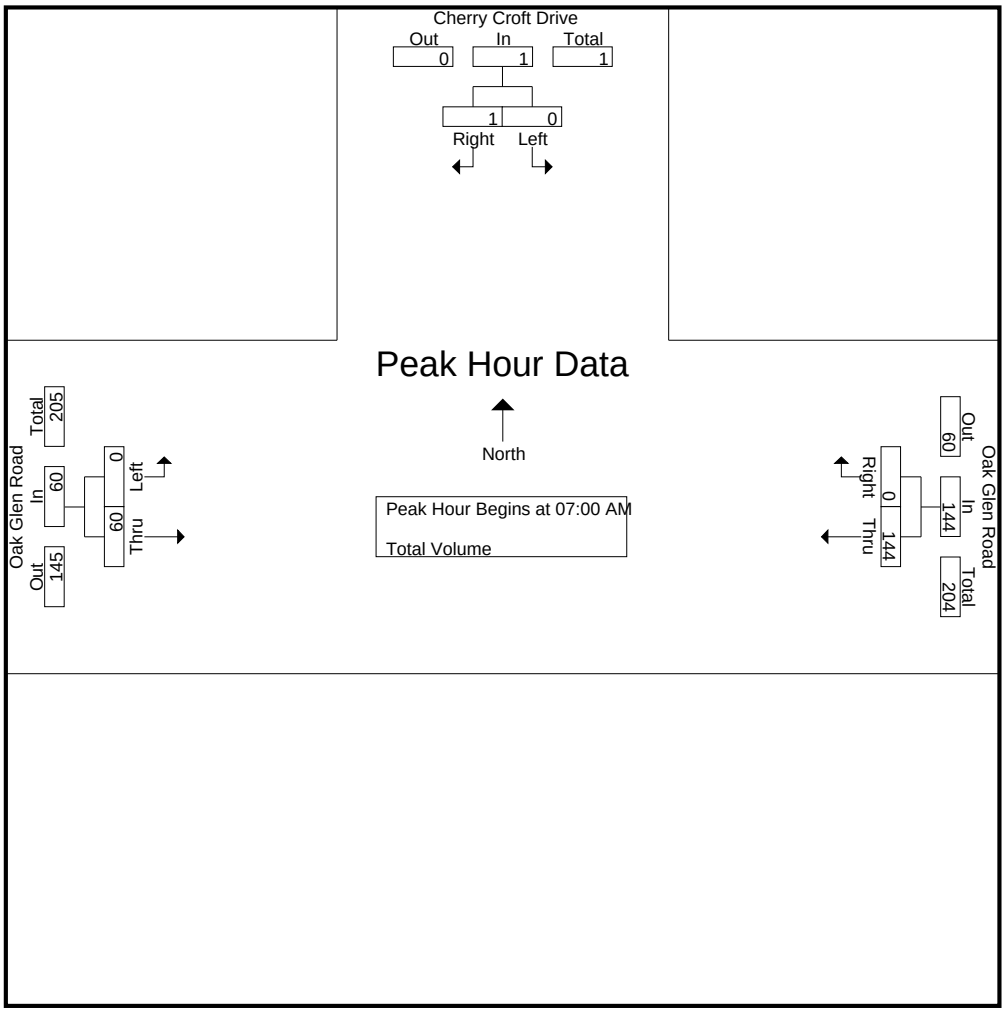

Peak Hour Analysis From 07:00 AM to 08:45 AM - Peak 1 of 1
Peak Hour for Each Approach Begins at:

	07:15 AM			07:00 AM			07:45 AM		
+0 mins.	0	1	1	40	0	40	0	23	23
+15 mins.	0	0	0	35	0	35	0	24	24
+30 mins.	0	0	0	28	0	28	0	14	14
+45 mins.	0	**2**	**2**	**41**	0	**41**	0	**26**	**26**
Total Volume	0	3	3	144	0	144	0	87	87
% App. Total	0	100		100	0		0	100	
PHF	.000	.375	.375	.878	.000	.878	.000	.837	.837

Counts Unlimited, Inc.
PO Box 1178
Corona, CA 92878
(951)268-6268

City of Yucaipa
N/S: Cherry Croft Drive
E/W: Oak Glen Road
Weather: Clear

File Name : YUCCHOAPM
Site Code : 19515541
Start Date : 9/29/2015
Page No : 1

Groups Printed- Total Volume

	Cherry Croft Drive Southbound			Oak Glen Road Westbound			Oak Glen Road Eastbound			
Start Time	Left	Right	App. Total	Thru	Right	App. Total	Left	Thru	App. Total	Int. Total
04:00 PM	0	1	1	26	0	26	0	25	25	52
04:15 PM	0	0	0	19	0	19	0	22	22	41
04:30 PM	0	1	1	25	0	25	0	33	33	59
04:45 PM	0	0	0	17	0	17	1	21	22	39
Total	0	2	2	87	0	87	1	101	102	191
05:00 PM	0	0	0	25	0	25	1	35	36	61
05:15 PM	0	0	0	26	0	26	0	32	32	58
05:30 PM	0	0	0	25	0	25	1	38	39	64
05:45 PM	1	0	1	20	0	20	0	32	32	53
Total	1	0	1	96	0	96	2	137	139	236
Grand Total	1	2	3	183	0	183	3	238	241	427
Apprch %	33.3	66.7		100	0		1.2	98.8		
Total %	0.2	0.5	0.7	42.9	0	42.9	0.7	55.7	56.4	

	Cherry Croft Drive Southbound			Oak Glen Road Westbound			Oak Glen Road Eastbound			
Start Time	Left	Right	App. Total	Thru	Right	App. Total	Left	Thru	App. Total	Int. Total
Peak Hour Analysis From 04:00 PM to 05:45 PM - Peak 1 of 1										
Peak Hour for Entire Intersection Begins at 05:00 PM										
05:00 PM	0	0	0	25	0	25	**1**	35	36	61
05:15 PM	0	0	0	**26**	0	**26**	0	32	32	58
05:30 PM	0	0	0	25	0	25	1	**38**	**39**	**64**
05:45 PM	**1**	0	**1**	20	0	20	0	32	32	53
Total Volume	1	0	1	96	0	96	2	137	139	236
% App. Total	100	0		100	0		1.4	98.6		
PHF	.250	.000	.250	.923	.000	.923	.500	.901	.891	.922

Counts Unlimited, Inc.
PO Box 1178
Corona, CA 92878
(951)268-6268

City of Yucaipa
N/S: Cherry Croft Drive
E/W: Oak Glen Road
Weather: Clear

File Name : YUCCHOAPM
Site Code : 19515541
Start Date : 9/29/2015
Page No : 2

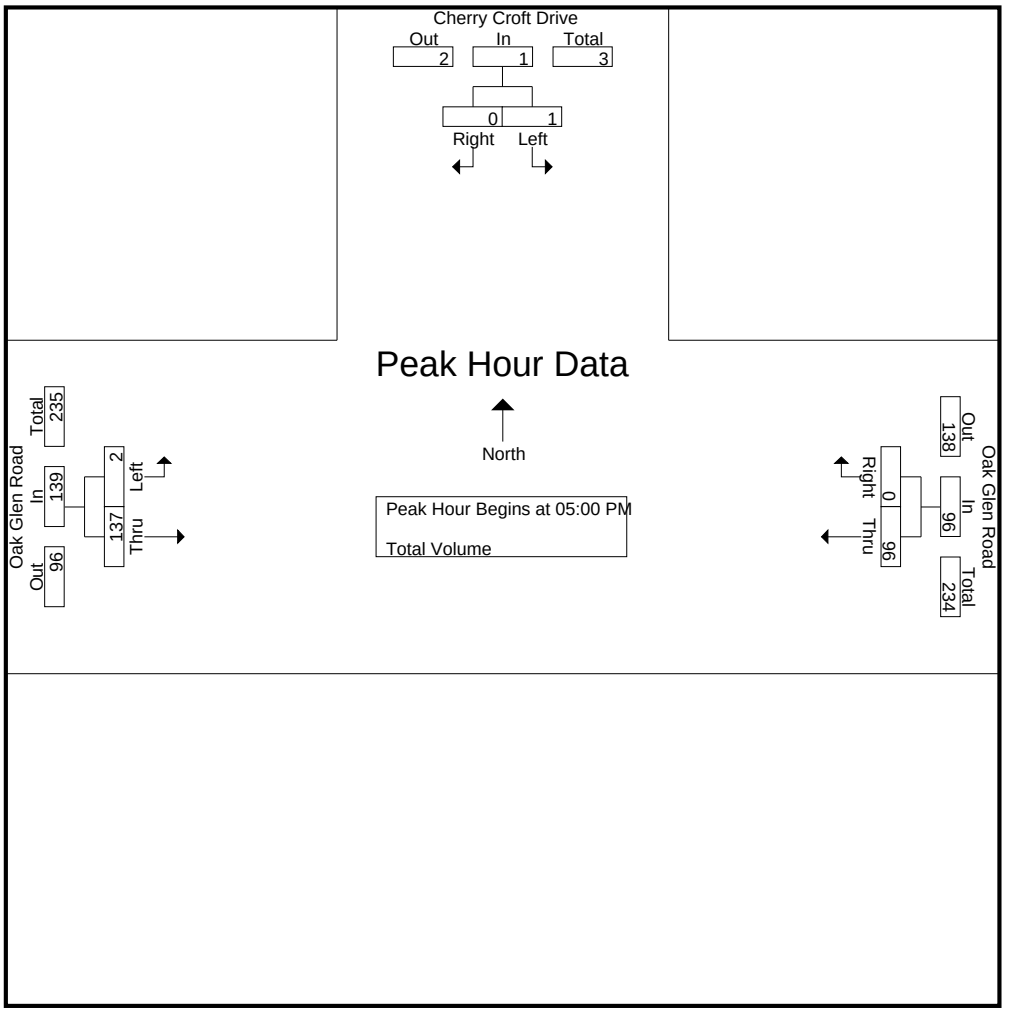

Peak Hour Analysis From 04:00 PM to 05:45 PM - Peak 1 of 1
Peak Hour for Each Approach Begins at:

	04:00 PM			05:00 PM			05:00 PM		
+0 mins.	0	**1**	**1**	25	0	25	**1**	35	36
+15 mins.	0	0	0	**26**	0	**26**	0	32	32
+30 mins.	0	1	1	25	0	25	1	**38**	**39**
+45 mins.	0	0	0	20	0	20	0	32	32
Total Volume	0	2	2	96	0	96	2	137	139
% App. Total	0	100		100	0		1.4	98.6	
PHF	.000	.500	.500	.923	.000	.923	.500	.901	.891

Counts Unlimited, Inc.
PO Box 1178
Corona, CA 92878
(951)268-6268

City of Yucaipa
N/S: Jefferson Street
E/W: Carter Street
Weather: Clear

File Name : YUCJECAAM
Site Code : 19515541
Start Date : 9/29/2015
Page No : 1

Groups Printed- Total Volume

	Jefferson Street Southbound				Carter Street Westbound				Jefferson Street Northbound				Carter Street Eastbound				
Start Time	Left	Thru	Right	App. Total	Left	Thru	Right	App. Total	Left	Thru	Right	App. Total	Left	Thru	Right	App. Total	Int. Total
07:00 AM	0	0	0	0	0	1	0	1	1	0	0	1	1	2	0	3	5
07:15 AM	0	0	0	0	0	6	0	6	0	0	0	0	0	0	0	0	6
07:30 AM	0	0	0	0	0	4	0	4	0	0	0	0	0	0	0	0	4
07:45 AM	0	0	0	0	0	2	0	2	0	0	0	0	0	3	0	3	5
Total	0	0	0	0	0	13	0	13	1	0	0	1	1	5	0	6	20
08:00 AM	0	0	0	0	0	2	0	2	0	0	0	0	0	1	0	1	3
08:15 AM	1	0	0	1	0	2	0	2	0	0	0	0	1	2	0	3	6
08:30 AM	1	0	0	1	0	4	0	4	0	1	0	1	0	2	0	2	8
08:45 AM	0	0	0	0	0	3	0	3	0	0	0	0	0	1	0	1	4
Total	2	0	0	2	0	11	0	11	0	1	0	1	1	6	0	7	21
Grand Total	2	0	0	2	0	24	0	24	1	1	0	2	2	11	0	13	41
Apprch %	100	0	0		0	100	0		50	50	0		15.4	84.6	0		
Total %	4.9	0	0	4.9	0	58.5	0	58.5	2.4	2.4	0	4.9	4.9	26.8	0	31.7	

	Jefferson Street Southbound				Carter Street Westbound				Jefferson Street Northbound				Carter Street Eastbound				
Start Time	Left	Thru	Right	App. Total	Left	Thru	Right	App. Total	Left	Thru	Right	App. Total	Left	Thru	Right	App. Total	Int. Total
Peak Hour Analysis From 07:00 AM to 08:45 AM - Peak 1 of 1																	
Peak Hour for Entire Intersection Begins at 07:45 AM																	
07:45 AM	0	0	0	0	0	2	0	2	0	0	0	0	0	**3**	0	**3**	5
08:00 AM	0	0	0	0	0	2	0	2	0	0	0	0	0	1	0	1	3
08:15 AM	**1**	0	0	**1**	0	2	0	2	0	0	0	0	**1**	2	0	3	6
08:30 AM	1	0	0	1	0	**4**	0	**4**	0	**1**	0	**1**	0	2	0	2	**8**
Total Volume	2	0	0	2	0	10	0	10	0	1	0	1	1	8	0	9	22
% App. Total	100	0	0		0	100	0		0	100	0		11.1	88.9	0		
PHF	.500	.000	.000	.500	.000	.625	.000	.625	.000	.250	.000	.250	.250	.667	.000	.750	.688

Counts Unlimited, Inc.
PO Box 1178
Corona, CA 92878
(951)268-6268

City of Yucaipa
N/S: Jefferson Street
E/W: Carter Street
Weather: Clear

File Name : YUCJECAAM
Site Code : 19515541
Start Date : 9/29/2015
Page No : 2

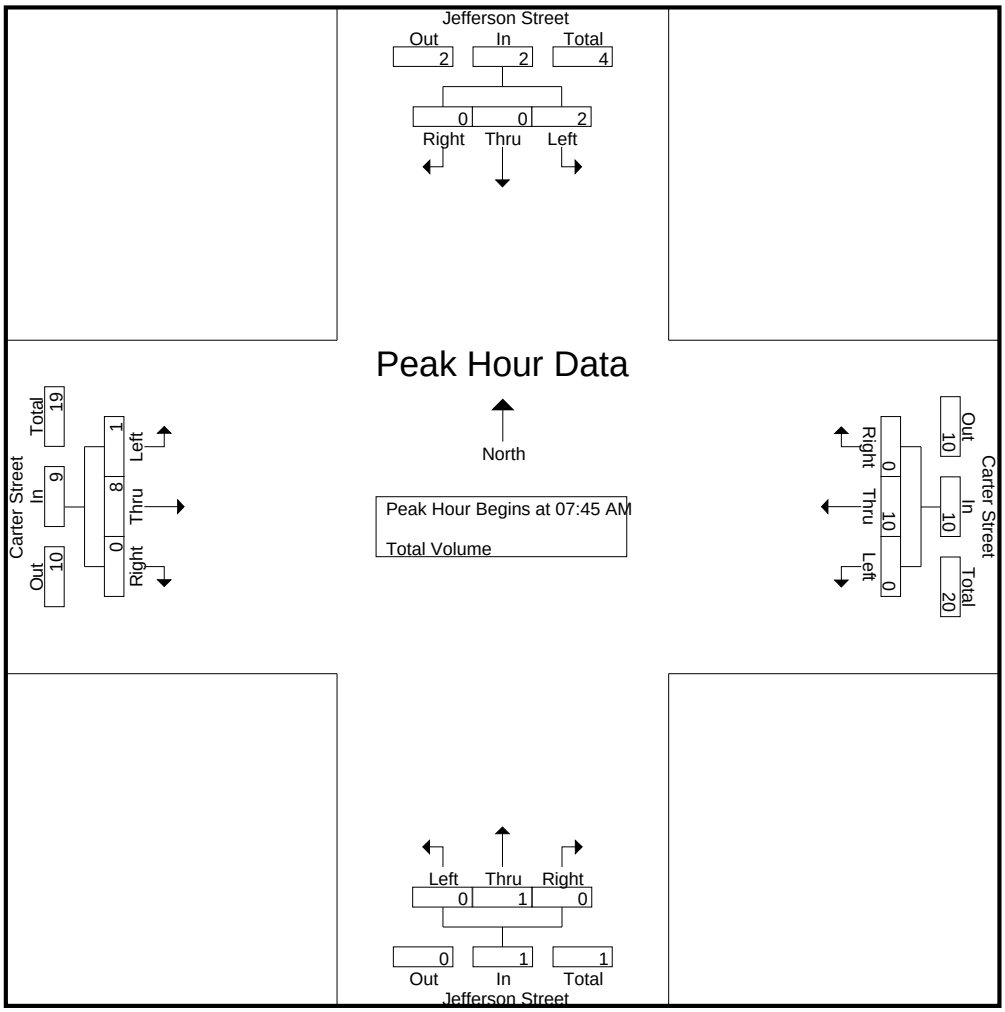

Peak Hour Analysis From 07:00 AM to 08:45 AM - Peak 1 of 1
Peak Hour for Each Approach Begins at:

	07:45 AM				07:15 AM				07:00 AM				07:45 AM			
+0 mins.	0	0	0	0	0	**6**	0	**6**	**1**	0	0	**1**	0	**3**	0	**3**
+15 mins.	0	0	0	0	0	4	0	4	0	0	0	0	0	1	0	1
+30 mins.	**1**	0	0	**1**	0	2	0	2	0	0	0	0	**1**	2	0	3
+45 mins.	1	0	0	1	0	2	0	2	0	0	0	0	0	2	0	2
Total Volume	2	0	0	2	0	14	0	14	1	0	0	1	1	8	0	9
% App. Total	100	0	0		0	100	0		100	0	0		11.1	88.9	0	
PHF	.500	.000	.000	.500	.000	.583	.000	.583	.250	.000	.000	.250	.250	.667	.000	.750

Counts Unlimited, Inc.
PO Box 1178
Corona, CA 92878
(951)268-6268

City of Yucaipa
N/S: Jefferson Street
E/W: Carter Street
Weather: Clear

File Name : YUCJECAPM
Site Code : 19515541
Start Date : 9/29/2015
Page No : 1

Groups Printed- Total Volume

	Jefferson Street Southbound				Carter Street Westbound				Jefferson Street Northbound				Carter Street Eastbound				
Start Time	Left	Thru	Right	App. Total	Left	Thru	Right	App. Total	Left	Thru	Right	App. Total	Left	Thru	Right	App. Total	Int. Total
04:00 PM	0	0	0	0	0	3	0	3	0	0	0	0	1	2	0	3	6
04:15 PM	0	0	0	0	0	3	0	3	0	0	0	0	0	1	0	1	4
04:30 PM	0	0	0	0	0	1	0	1	0	0	0	0	0	4	1	5	6
04:45 PM	0	1	1	2	0	4	0	4	1	0	0	1	0	3	1	4	11
Total	0	1	1	2	0	11	0	11	1	0	0	1	1	10	2	13	27
05:00 PM	0	0	0	0	0	2	0	2	1	0	0	1	1	0	0	1	4
05:15 PM	0	0	0	0	0	2	0	2	0	0	0	0	0	7	0	7	9
05:30 PM	0	0	0	0	0	4	0	4	0	0	0	0	0	0	0	0	4
05:45 PM	0	0	0	0	0	1	0	1	0	0	0	0	0	3	0	3	4
Total	0	0	0	0	0	9	0	9	1	0	0	1	1	10	0	11	21
Grand Total	0	1	1	2	0	20	0	20	2	0	0	2	2	20	2	24	48
Apprch %	0	50	50		0	100	0		100	0	0		8.3	83.3	8.3		
Total %	0	2.1	2.1	4.2	0	41.7	0	41.7	4.2	0	0	4.2	4.2	41.7	4.2	50	

	Jefferson Street Southbound				Carter Street Westbound				Jefferson Street Northbound				Carter Street Eastbound				
Start Time	Left	Thru	Right	App. Total	Left	Thru	Right	App. Total	Left	Thru	Right	App. Total	Left	Thru	Right	App. Total	Int. Total
Peak Hour Analysis From 04:00 PM to 05:45 PM - Peak 1 of 1																	
Peak Hour for Entire Intersection Begins at 04:30 PM																	
04:30 PM	0	0	0	0	0	1	0	1	0	0	0	0	0	4	**1**	5	6
04:45 PM	0	**1**	**1**	**2**	0	**4**	0	**4**	**1**	0	0	**1**	0	3	1	4	**11**
05:00 PM	0	0	0	0	0	2	0	2	1	0	0	1	**1**	0	0	1	4
05:15 PM	0	0	0	0	0	2	0	2	0	0	0	0	0	**7**	0	**7**	9
Total Volume	0	1	1	2	0	9	0	9	2	0	0	2	1	14	2	17	30
% App. Total	0	50	50		0	100	0		100	0	0		5.9	82.4	11.8		
PHF	.000	.250	.250	.250	.000	.563	.000	.563	.500	.000	.000	.500	.250	.500	.500	.607	.682

Counts Unlimited, Inc.
PO Box 1178
Corona, CA 92878
(951)268-6268

City of Yucaipa
N/S: Jefferson Street
E/W: Carter Street
Weather: Clear

File Name : YUCJECAPM
Site Code : 19515541
Start Date : 9/29/2015
Page No : 2

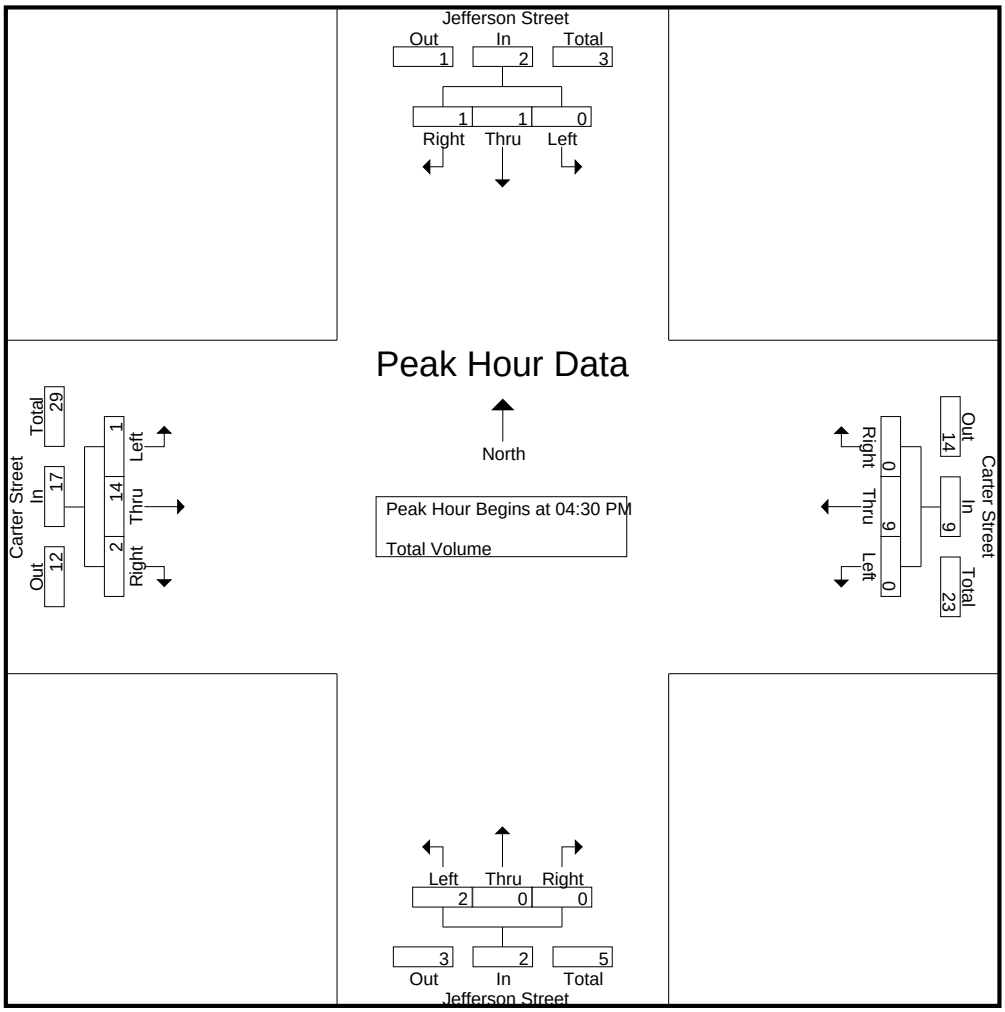

Peak Hour Analysis From 04:00 PM to 05:45 PM - Peak 1 of 1
Peak Hour for Each Approach Begins at:

	04:00 PM				04:45 PM				04:15 PM				04:30 PM			
+0 mins.	0	0	0	0	0	**4**	0	**4**	0	0	0	0	0	4	**1**	5
+15 mins.	0	0	0	0	0	2	0	2	0	0	0	0	0	3	1	4
+30 mins.	0	0	0	0	0	2	0	2	**1**	0	0	**1**	**1**	0	0	1
+45 mins.	0	**1**	**1**	**2**	0	4	0	4	1	0	0	1	0	**7**	0	**7**
Total Volume	0	1	1	2	0	12	0	12	2	0	0	2	1	14	2	17
% App. Total	0	50	50		0	100	0		100	0	0		5.9	82.4	11.8	
PHF	.000	.250	.250	.250	.000	.750	.000	.750	.500	.000	.000	.500	.250	.500	.500	.607

Counts Unlimited, Inc.
PO Box 1178
Corona, CA 92878
(951)268-6268

City of Yucaipa
N/S: Pendleton Road
E/W: Date Avenue
Weather: Clear

File Name : YUCPEDAAM
Site Code : 19515541
Start Date : 9/29/2015
Page No : 1

Groups Printed- Total Volume

	Pendleton Road Southbound				Private Driveway Westbound				Pendleton Road Northbound				Date Avenue Eastbound				
Start Time	Left	Thru	Right	App. Total	Left	Thru	Right	App. Total	Left	Thru	Right	App. Total	Left	Thru	Right	App. Total	Int. Total
07:00 AM	0	0	1	1	0	0	0	0	0	0	0	0	1	0	0	1	2
07:15 AM	0	0	6	6	0	0	0	0	0	0	0	0	5	0	0	5	11
07:30 AM	0	0	3	3	0	0	0	0	1	0	0	1	5	0	0	5	9
07:45 AM	0	0	2	2	0	0	0	0	0	0	0	0	4	0	0	4	6
Total	0	0	12	12	0	0	0	0	1	0	0	1	15	0	0	15	28
08:00 AM	0	0	3	3	0	0	0	0	1	1	0	2	5	0	1	6	11
08:15 AM	0	0	3	3	0	0	0	0	0	0	0	0	3	0	0	3	6
08:30 AM	0	2	5	7	0	0	0	0	2	0	0	2	2	0	0	2	11
08:45 AM	0	0	4	4	0	0	0	0	0	0	0	0	4	0	0	4	8
Total	0	2	15	17	0	0	0	0	3	1	0	4	14	0	1	15	36
Grand Total	0	2	27	29	0	0	0	0	4	1	0	5	29	0	1	30	64
Apprch %	0	6.9	93.1		0	0	0		80	20	0		96.7	0	3.3		
Total %	0	3.1	42.2	45.3	0	0	0	0	6.2	1.6	0	7.8	45.3	0	1.6	46.9	

	Pendleton Road Southbound				Private Driveway Westbound				Pendleton Road Northbound				Date Avenue Eastbound				
Start Time	Left	Thru	Right	App. Total	Left	Thru	Right	App. Total	Left	Thru	Right	App. Total	Left	Thru	Right	App. Total	Int. Total
Peak Hour Analysis From 07:00 AM to 08:45 AM - Peak 1 of 1																	
Peak Hour for Entire Intersection Begins at 07:15 AM																	
07:15 AM	0	0	**6**	**6**	0	0	0	0	0	0	0	0	**5**	0	0	5	**11**
07:30 AM	0	0	3	3	0	0	0	0	**1**	0	0	1	5	0	0	5	9
07:45 AM	0	0	2	2	0	0	0	0	0	0	0	0	4	0	0	4	6
08:00 AM	0	0	3	3	0	0	0	0	1	**1**	0	**2**	5	0	**1**	**6**	11
Total Volume	0	0	14	14	0	0	0	0	2	1	0	3	19	0	1	20	37
% App. Total	0	0	100		0	0	0		66.7	33.3	0		95	0	5		
PHF	.000	.000	.583	.583	.000	.000	.000	.000	.500	.250	.000	.375	.950	.000	.250	.833	.841

Counts Unlimited, Inc.
PO Box 1178
Corona, CA 92878
(951)268-6268

City of Yucaipa
N/S: Pendleton Road
E/W: Date Avenue
Weather: Clear

File Name : YUCPEDAAM
Site Code : 19515541
Start Date : 9/29/2015
Page No : 2

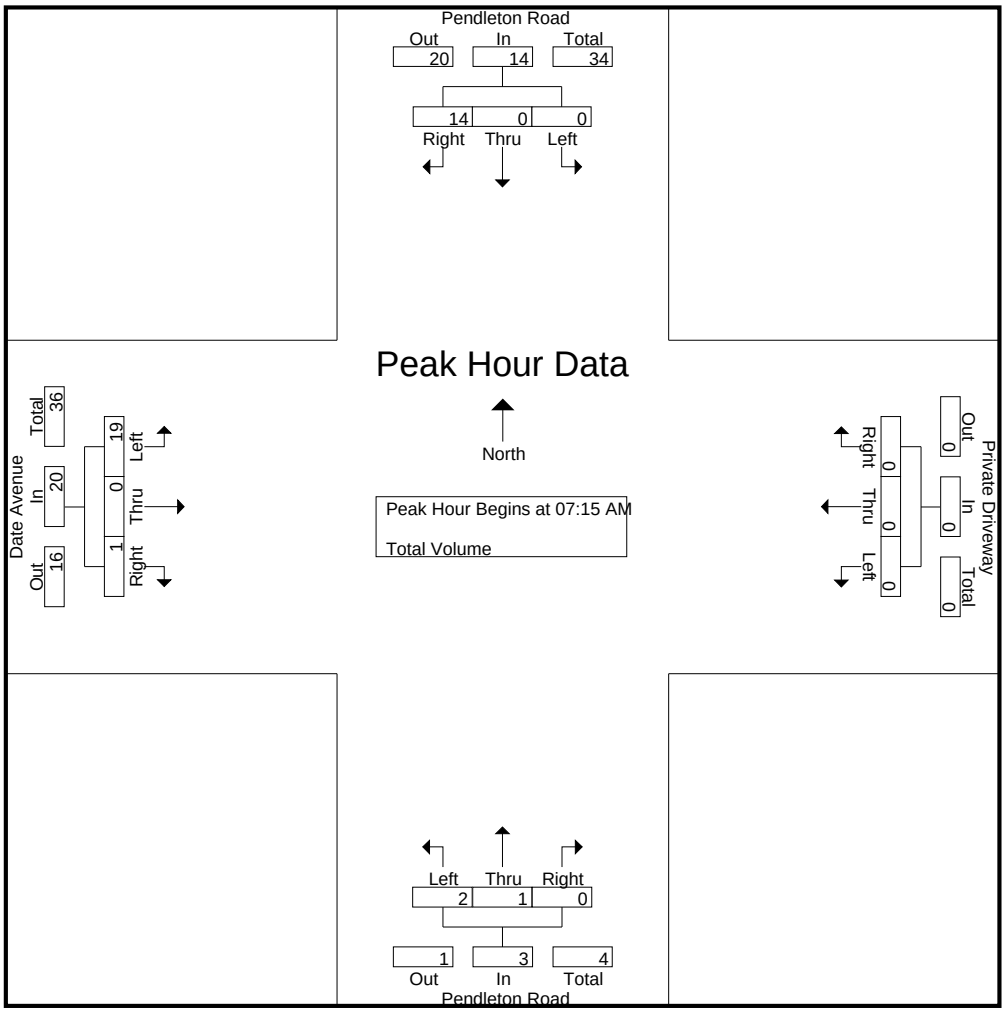

Peak Hour Analysis From 07:00 AM to 08:45 AM - Peak 1 of 1
Peak Hour for Each Approach Begins at:

	08:00 AM				07:00 AM				07:45 AM				07:15 AM			
+0 mins.	0	0	3	3	0	0	0	0	0	0	0	0	**5**	0	0	5
+15 mins.	0	0	3	3	0	0	0	0	1	**1**	0	**2**	5	0	0	5
+30 mins.	0	**2**	**5**	**7**	0	0	0	0	0	0	0	0	4	0	0	4
+45 mins.	0	0	4	4	0	0	0	0	**2**	0	0	2	5	0	**1**	**6**
Total Volume	0	2	15	17	0	0	0	0	3	1	0	4	19	0	1	20
% App. Total	0	11.8	88.2		0	0	0		75	25	0		95	0	5	
PHF	.000	.250	.750	.607	.000	.000	.000	.000	.375	.250	.000	.500	.950	.000	.250	.833

Counts Unlimited, Inc.
PO Box 1178
Corona, CA 92878
(951)268-6268

City of Yucaipa
N/S: Pendleton Road
E/W: Date Avenue
Weather: Clear

File Name : YUCPEDAPM
Site Code : 19515541
Start Date : 9/29/2015
Page No : 1

Groups Printed- Total Volume

	Pendleton Road Southbound				Private Driveway Westbound				Pendleton Road Northbound				Date Avenue Eastbound				
Start Time	Left	Thru	Right	App. Total	Left	Thru	Right	App. Total	Left	Thru	Right	App. Total	Left	Thru	Right	App. Total	Int. Total
04:00 PM	1	0	2	3	0	0	0	0	0	0	0	0	6	0	2	8	11
04:15 PM	0	0	5	5	0	0	0	0	0	1	0	1	4	0	0	4	10
04:30 PM	0	0	4	4	0	0	0	0	0	1	0	1	5	0	0	5	10
04:45 PM	0	0	8	8	0	0	0	0	1	1	0	2	5	0	2	7	17
Total	1	0	19	20	0	0	0	0	1	3	0	4	20	0	4	24	48
05:00 PM	0	0	4	4	0	1	0	1	0	1	0	1	6	0	2	8	14
05:15 PM	0	1	3	4	0	0	0	0	0	1	0	1	9	0	0	9	14
05:30 PM	0	0	4	4	0	1	0	1	3	1	0	4	7	0	0	7	16
05:45 PM	0	0	8	8	0	0	0	0	1	0	0	1	5	0	1	6	15
Total	0	1	19	20	0	2	0	2	4	3	0	7	27	0	3	30	59
Grand Total	1	1	38	40	0	2	0	2	5	6	0	11	47	0	7	54	107
Apprch %	2.5	2.5	95		0	100	0		45.5	54.5	0		87	0	13		
Total %	0.9	0.9	35.5	37.4	0	1.9	0	1.9	4.7	5.6	0	10.3	43.9	0	6.5	50.5	

	Pendleton Road Southbound				Private Driveway Westbound				Pendleton Road Northbound				Date Avenue Eastbound				
Start Time	Left	Thru	Right	App. Total	Left	Thru	Right	App. Total	Left	Thru	Right	App. Total	Left	Thru	Right	App. Total	Int. Total
Peak Hour Analysis From 04:00 PM to 05:45 PM - Peak 1 of 1																	
Peak Hour for Entire Intersection Begins at 04:45 PM																	
04:45 PM	0	0	**8**	**8**	0	0	0	0	1	**1**	0	2	5	0	**2**	7	**17**
05:00 PM	0	0	4	4	0	**1**	0	**1**	0	1	0	1	6	0	2	8	14
05:15 PM	0	**1**	3	4	0	0	0	0	0	1	0	1	**9**	0	0	**9**	14
05:30 PM	0	0	4	4	0	1	0	1	**3**	1	0	**4**	7	0	0	7	16
Total Volume	0	1	19	20	0	2	0	2	4	4	0	8	27	0	4	31	61
% App. Total	0	5	95		0	100	0		50	50	0		87.1	0	12.9		
PHF	.000	.250	.594	.625	.000	.500	.000	.500	.333	1.00	.000	.500	.750	.000	.500	.861	.897

Counts Unlimited, Inc.
PO Box 1178
Corona, CA 92878
(951)268-6268

City of Yucaipa
N/S: Pendleton Road
E/W: Date Avenue
Weather: Clear

File Name : YUCPEDAPM
Site Code : 19515541
Start Date : 9/29/2015
Page No : 2

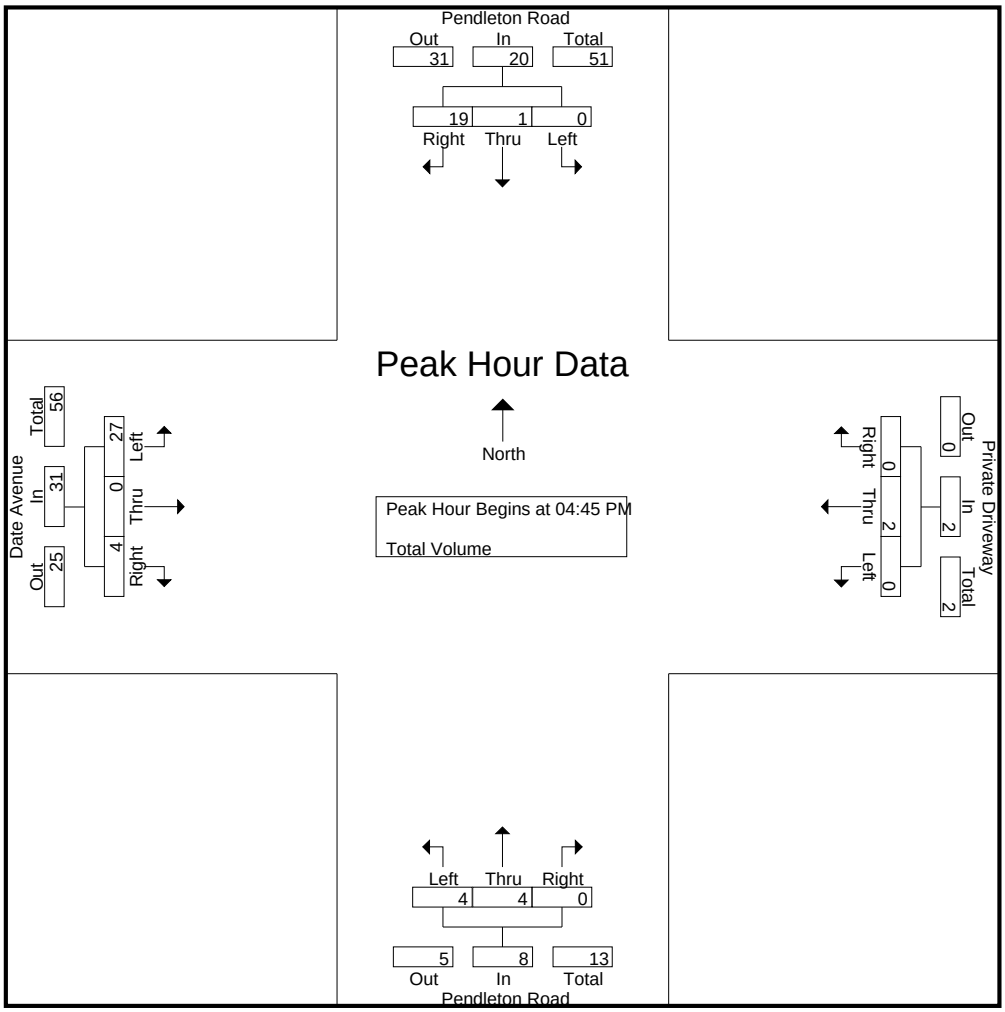

Peak Hour Analysis From 04:00 PM to 05:45 PM - Peak 1 of 1
Peak Hour for Each Approach Begins at:

	04:15 PM				04:45 PM				04:45 PM				04:45 PM			
+0 mins.	0	0	5	5	0	0	0	0	1	**1**	0	2	5	0	**2**	7
+15 mins.	0	0	4	4	0	**1**	0	**1**	0	1	0	1	6	0	2	8
+30 mins.	0	0	**8**	**8**	0	0	0	0	0	1	0	1	**9**	0	0	**9**
+45 mins.	0	0	4	4	0	1	0	1	**3**	1	0	**4**	7	0	0	7
Total Volume	0	0	21	21	0	2	0	2	4	4	0	8	27	0	4	31
% App. Total	0	0	100		0	100	0		50	50	0		87.1	0	12.9	
PHF	.000	.000	.656	.656	.000	.500	.000	.500	.333	1.000	.000	.500	.750	.000	.500	.861

Counts Unlimited, Inc.
PO Box 1178
Corona, CA 92878
(951)268-6268

City of Yucaipa
N/S: Pendleton Road
E/W: Oak Glen Road
Weather: Clear

File Name : YUCPEOAAM
Site Code : 19515541
Start Date : 9/29/2015
Page No : 1

Groups Printed- Total Volume

	Oak Glen Road Westbound			Pendleton Road Northbound			Oak Glen Road Eastbound			
Start Time	Left	Thru	App. Total	Left	Right	App. Total	Thru	Right	App. Total	Int. Total
07:00 AM	0	33	33	6	1	7	10	1	11	51
07:15 AM	0	30	30	5	0	5	7	3	10	45
07:30 AM	0	25	25	5	2	7	15	3	18	50
07:45 AM	0	29	29	10	1	11	19	3	22	62
Total	0	117	117	26	4	30	51	10	61	208
08:00 AM	0	18	18	4	3	7	23	2	25	50
08:15 AM	0	14	14	4	1	5	10	5	15	34
08:30 AM	1	17	18	4	0	4	23	1	24	46
08:45 AM	0	15	15	1	2	3	17	1	18	36
Total	1	64	65	13	6	19	73	9	82	166
Grand Total	1	181	182	39	10	49	124	19	143	374
Apprch %	0.5	99.5		79.6	20.4		86.7	13.3		
Total %	0.3	48.4	48.7	10.4	2.7	13.1	33.2	5.1	38.2	

	Oak Glen Road Westbound			Pendleton Road Northbound			Oak Glen Road Eastbound			
Start Time	Left	Thru	App. Total	Left	Right	App. Total	Thru	Right	App. Total	Int. Total
Peak Hour Analysis From 07:00 AM to 08:45 AM - Peak 1 of 1										
Peak Hour for Entire Intersection Begins at 07:00 AM										
07:00 AM	0	**33**	**33**	6	1	7	10	1	11	51
07:15 AM	0	30	30	5	0	5	7	**3**	10	45
07:30 AM	0	25	25	5	**2**	7	15	3	18	50
07:45 AM	0	29	29	**10**	1	**11**	**19**	3	**22**	**62**
Total Volume	0	117	117	26	4	30	51	10	61	208
% App. Total	0	100		86.7	13.3		83.6	16.4		
PHF	.000	.886	.886	.650	.500	.682	.671	.833	.693	.839

Counts Unlimited, Inc.
PO Box 1178
Corona, CA 92878
(951)268-6268

City of Yucaipa
N/S: Pendleton Road
E/W: Oak Glen Road
Weather: Clear

File Name : YUCPEOAAM
Site Code : 19515541
Start Date : 9/29/2015
Page No : 2

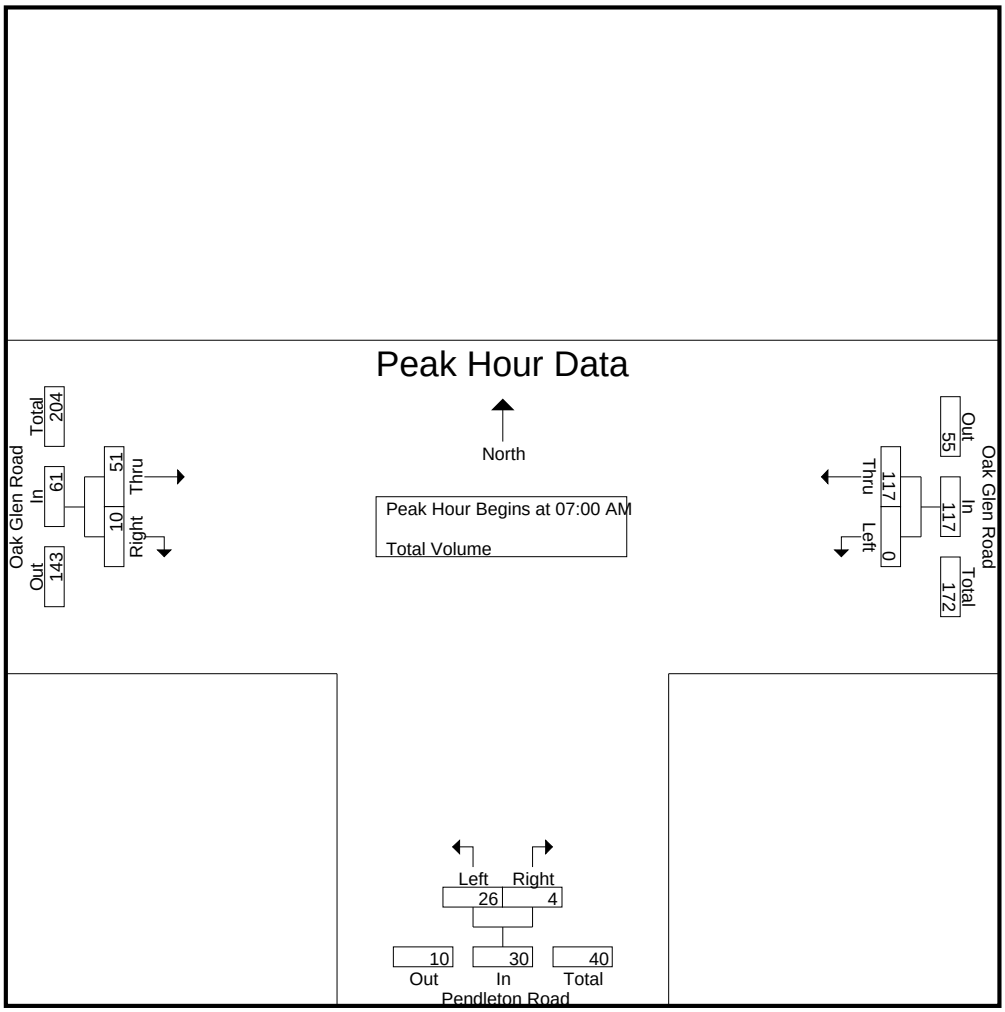

Peak Hour Analysis From 07:00 AM to 08:45 AM - Peak 1 of 1
Peak Hour for Each Approach Begins at:

	07:00 AM			07:00 AM			07:45 AM		
+0 mins.	0	**33**	**33**	6	1	7	19	3	22
+15 mins.	0	30	30	5	0	5	**23**	2	**25**
+30 mins.	0	25	25	5	**2**	7	10	**5**	15
+45 mins.	0	29	29	**10**	1	**11**	23	1	24
Total Volume	0	117	117	26	4	30	75	11	86
% App. Total	0	100		86.7	13.3		87.2	12.8	
PHF	.000	.886	.886	.650	.500	.682	.815	.550	.860

Counts Unlimited, Inc.
PO Box 1178
Corona, CA 92878
(951)268-6268

City of Yucaipa
N/S: Pendleton Road
E/W: Oak Glen Road
Weather: Clear

File Name : YUCPEOAPM
Site Code : 19515541
Start Date : 9/29/2015
Page No : 1

Groups Printed- Total Volume

	Oak Glen Road Westbound			Pendleton Road Northbound			Oak Glen Road Eastbound			
Start Time	Left	Thru	App. Total	Left	Right	App. Total	Thru	Right	App. Total	Int. Total
04:00 PM	0	24	24	4	1	5	23	3	26	55
04:15 PM	2	16	18	2	1	3	18	2	20	41
04:30 PM	1	25	26	1	0	1	30	4	34	61
04:45 PM	0	10	10	2	1	3	20	4	24	37
Total	3	75	78	9	3	12	91	13	104	194
05:00 PM	0	20	20	2	0	2	30	5	35	57
05:15 PM	1	24	25	4	1	5	27	2	29	59
05:30 PM	0	24	24	2	0	2	24	8	32	58
05:45 PM	0	19	19	1	2	3	25	8	33	55
Total	1	87	88	9	3	12	106	23	129	229
Grand Total	4	162	166	18	6	24	197	36	233	423
Apprch %	2.4	97.6		75	25		84.5	15.5		
Total %	0.9	38.3	39.2	4.3	1.4	5.7	46.6	8.5	55.1	

	Oak Glen Road Westbound			Pendleton Road Northbound			Oak Glen Road Eastbound			
Start Time	Left	Thru	App. Total	Left	Right	App. Total	Thru	Right	App. Total	Int. Total
Peak Hour Analysis From 04:00 PM to 05:45 PM - Peak 1 of 1										
Peak Hour for Entire Intersection Begins at 05:00 PM										
05:00 PM	0	20	20	2	0	2	**30**	5	**35**	57
05:15 PM	**1**	**24**	**25**	**4**	1	**5**	27	2	29	**59**
05:30 PM	0	24	24	2	0	2	24	**8**	32	58
05:45 PM	0	19	19	1	**2**	3	25	8	33	55
Total Volume	1	87	88	9	3	12	106	23	129	229
% App. Total	1.1	98.9		75	25		82.2	17.8		
PHF	.250	.906	.880	.563	.375	.600	.883	.719	.921	.970

Counts Unlimited, Inc.
PO Box 1178
Corona, CA 92878
(951)268-6268

City of Yucaipa
N/S: Pendleton Road
E/W: Oak Glen Road
Weather: Clear

File Name : YUCPEOAPM
Site Code : 19515541
Start Date : 9/29/2015
Page No : 2

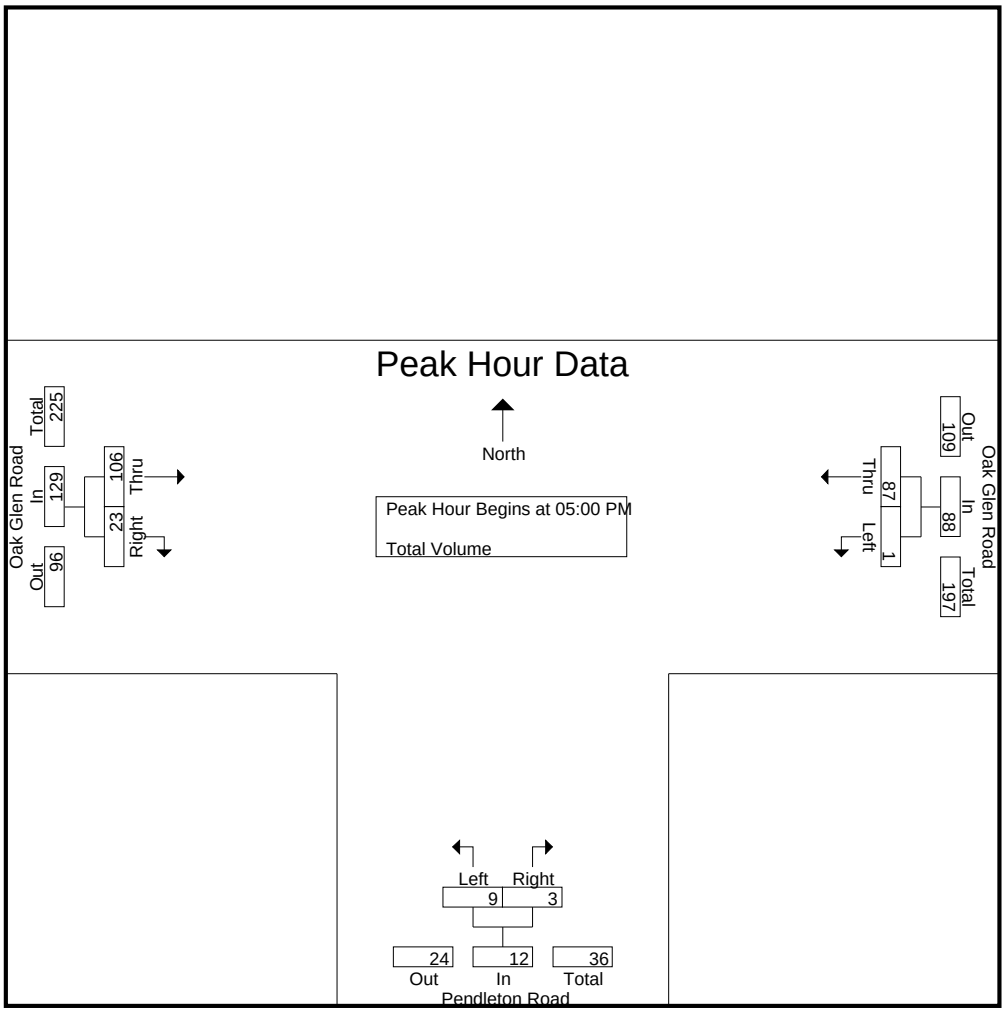

Peak Hour Analysis From 04:00 PM to 05:45 PM - Peak 1 of 1
Peak Hour for Each Approach Begins at:

	05:00 PM			04:00 PM			05:00 PM		
+0 mins.	0	20	20	**4**	**1**	**5**	**30**	5	**35**
+15 mins.	**1**	**24**	**25**	2	1	3	27	2	29
+30 mins.	0	24	24	1	0	1	24	**8**	32
+45 mins.	0	19	19	2	1	3	25	8	33
Total Volume	1	87	88	9	3	12	106	23	129
% App. Total	1.1	98.9		75	25		82.2	17.8	
PHF	.250	.906	.880	.563	.750	.600	.883	.719	.921

Counts Unlimited, Inc

PO Box 1178
Corona, CA 92878
Phone: 951-268-6268
email: counts@countsunlimited.com

City of Yucaipa
Bryant Avenue
B/ Oak Glen Road - Date Street
24 Hour Directional Volume Count

YUC002
Site Code: 195-15541

Start Time	29-Sep-15 Tue	Northbound Morning	Northbound Afternoon	Hour Totals Morning	Hour Totals Afternoon	Southbound Morning	Southbound Afternoon	Hour Totals Morning	Hour Totals Afternoon	Combined Totals Morning	Combined Totals Afternoon
12:00		7	79			8	72				
12:15		8	81			7	78				
12:30		4	88			4	80				
12:45		2	63	21	311	3	107	22	337	43	648
01:00		6	75			5	88				
01:15		4	105			1	87				
01:30		1	86			6	87				
01:45		1	102	12	368	7	90	19	352	31	720
02:00		4	128			4	106				
02:15		1	**157**			3	109				
02:30		5	**141**			0	**220**				
02:45		1	**140**	11	566	1	**137**	8	572	19	1138
03:00		3	**145**			3	**251**				
03:15		4	100			1	**168**				
03:30		4	98			2	132				
03:45		5	112	16	455	3	126	9	677	25	1132
04:00		5	93			5	129				
04:15		12	108			7	131				
04:30		6	123			7	130				
04:45		12	106	35	430	8	128	27	518	62	948
05:00		13	116			7	129				
05:15		22	131			9	142				
05:30		29	108			18	128				
05:45		26	95	90	450	15	159	49	558	139	1008
06:00		44	97			19	157				
06:15		62	102			30	140				
06:30		67	105			36	119				
06:45		106	117	279	421	44	104	129	520	408	941
07:00		142	86			59	114				
07:15		**170**	68			87	96				
07:30		**247**	52			**162**	67				
07:45		**215**	62	774	268	**193**	67	501	344	1275	612
08:00		**150**	54			**200**	77				
08:15		77	58			**94**	73				
08:30		86	52			80	73				
08:45		106	47	419	211	66	75	440	298	859	509
09:00		82	43			52	69				
09:15		66	36			74	44				
09:30		59	36			61	30				
09:45		67	24	274	139	77	35	264	178	538	317
10:00		75	28			74	31				
10:15		84	19			80	29				
10:30		75	12			82	21				
10:45		77	13	311	72	81	8	317	89	628	161
11:00		75	11			97	23				
11:15		97	6			98	13				
11:30		87	6			93	7				
11:45		80	8	339	31	94	8	382	51	721	82
Total		2581	3722	2581	3722	2167	4494	2167	4494	4748	8216
Combined Total		6303		6303		6661		6661		12964	
AM Peak	-	07:15	-	-	-	07:30	-	-	-	-	-
Vol.	-	782	-	-	-	649	-	-	-	-	-
P.H.F.		0.791				0.811					
PM Peak	-	-	02:15	-	-	-	02:30	-	-	-	-
Vol.	-	-	583	-	-	-	776	-	-	-	-
P.H.F.			0.928				0.773				
Percentage		40.9%	59.1%			32.5%	67.5%				
ADT/AADT		ADT 12,964		AADT 12,964							

Counts Unlimited, Inc

PO Box 1178
Corona, CA 92878
Phone: 951-268-6268
email: counts@countsunlimited.com

City of Yuciapa
Bryant Avenue
B/ Oak Glen Road - Fir Avenue
24 Hour Directional Volume Count

YUC001
Site Code: 195-15541

Start Time	29-Sep-15 Tue	Northbound Morning	Northbound Afternoon	Hour Totals Morning	Hour Totals Afternoon	Southbound Morning	Southbound Afternoon	Hour Totals Morning	Hour Totals Afternoon	Combined Totals Morning	Combined Totals Afternoon
12:00		12	83			4	86				
12:15		10	85			9	65				
12:30		8	73			4	63				
12:45		8	73	38	314	3	82	20	296	58	610
01:00		12	82			2	72				
01:15		7	90			2	84				
01:30		3	89			6	85				
01:45		6	89	28	350	5	78	15	319	43	669
02:00		8	119			2	91				
02:15		8	114			2	**153**				
02:30		2	**126**			1	**138**				
02:45		4	**133**	22	492	3	**119**	8	501	30	993
03:00		4	**128**			6	**140**				
03:15		3	**141**			3	93				
03:30		5	122			5	101				
03:45		2	115	14	506	7	93	21	427	35	933
04:00		2	117			13	80				
04:15		10	121			19	94				
04:30		3	125			17	98				
04:45		8	108	23	471	22	108	71	380	94	851
05:00		7	128			20	114				
05:15		12	141			31	126				
05:30		24	126			47	109				
05:45		20	130	63	525	47	129	145	478	208	1003
06:00		34	105			35	126				
06:15		43	118			79	96				
06:30		45	108			81	106				
06:45		65	110	187	441	101	95	296	423	483	864
07:00		82	112			126	93				
07:15		**87**	81			**189**	57				
07:30		**157**	83			**223**	64				
07:45		**211**	83	537	359	**226**	53	764	267	1301	626
08:00		**146**	72			**149**	34				
08:15		67	97			102	45				
08:30		77	69			110	42				
08:45		70	66	360	304	101	44	462	165	822	469
09:00		69	62			76	33				
09:15		66	49			108	38				
09:30		60	51			74	18				
09:45		62	38	257	200	77	23	335	112	592	312
10:00		75	25			85	18				
10:15		78	23			96	15				
10:30		75	18			72	13				
10:45		88	22	316	88	85	7	338	53	654	141
11:00		79	23			67	16				
11:15		81	16			96	10				
11:30		99	11			69	3				
11:45		76	9	335	59	79	4	311	33	646	92
Total		2180	4109	2180	4109	2786	3454	2786	3454	4966	7563
Combined Total		6289		6289		6240		6240		12529	
AM Peak	-	07:15	-	-	-	07:15	-	-	-	-	-
Vol.	-	601	-	-	-	787	-	-	-	-	-
P.H.F.		0.712				0.871					
PM Peak	-	-	02:30	-	-	-	02:15	-	-	-	-
Vol.	-	-	528	-	-	-	550	-	-	-	-
P.H.F.			0.936				0.899				
Percentage		34.7%	65.3%			44.6%	55.4%				
ADT/AADT		ADT 12,529		AADT 12,529							

Counts Unlimited, Inc

PO Box 1178
Corona, CA 92878
Phone: 951-268-6268
email: counts@countsunlimited.com

City of Yucaipa
Oak Glen Road
B/ Freemont Street - Jefferson Street
24 Hour Directional Volume Count

YUC006
Site Code: 195-15541

Start Time	29-Sep-15 Tue	Eastbound Morning	Eastbound Afternoon	Hour Totals Morning	Hour Totals Afternoon	Westbound Morning	Westbound Afternoon	Hour Totals Morning	Hour Totals Afternoon	Combined Totals Morning	Combined Totals Afternoon
12:00		1	19			0	**29**				
12:15		2	28			0	**23**				
12:30		0	42			0	**36**				
12:45		3	17	6	106	1	**29**	1	117	7	223
01:00		1	30			0	26				
01:15		0	26			0	23				
01:30		1	17			0	29				
01:45		0	26	2	99	0	29	0	107	2	206
02:00		1	28			0	24				
02:15		2	26			0	30				
02:30		1	43			1	17				
02:45		0	39	4	136	1	20	2	91	6	227
03:00		1	36			0	35				
03:15		1	26			0	14				
03:30		0	34			4	9				
03:45		1	28	3	124	2	20	6	78	9	202
04:00		1	25			2	18				
04:15		2	34			4	18				
04:30		2	23			5	13				
04:45		1	**39**	6	121	6	15	17	64	23	185
05:00		0	**33**			10	25				
05:15		4	**45**			12	15				
05:30		1	**33**			8	18				
05:45		3	30	8	141	19	17	49	75	57	216
06:00		4	29			14	18				
06:15		10	27			25	5				
06:30		18	24			19	17				
06:45		12	32	44	112	**45**	5	103	45	147	157
07:00		11	23			**37**	3				
07:15		18	22			**30**	4				
07:30		26	22			**39**	7				
07:45		27	17	82	84	18	2	124	16	206	100
08:00		17	7			14	8				
08:15		26	11			20	7				
08:30		17	19			14	1				
08:45		20	11	80	48	10	2	58	18	138	66
09:00		27	20			19	0				
09:15		24	10			13	2				
09:30		25	6			14	2				
09:45		27	2	103	38	16	0	62	4	165	42
10:00		26	9			22	0				
10:15		23	6			23	4				
10:30		18	5			20	0				
10:45		**30**	6	97	26	12	2	77	6	174	32
11:00		**27**	3			21	0				
11:15		**33**	4			14	1				
11:30		**28**	4			22	2				
11:45		27	2	115	13	15	0	72	3	187	16
Total		550	1048	550	1048	571	624	571	624	1121	1672
Combined Total		1598		1598		1195		1195		2793	
AM Peak	-	10:45	-	-	-	06:45	-	-	-	-	-
Vol.	-	118	-	-	-	151	-	-	-	-	-
P.H.F.		0.894				0.839					
PM Peak	-	-	04:45	-	-	-	12:00	-	-	-	-
Vol.	-	-	150	-	-	-	117	-	-	-	-
P.H.F.			0.833				0.813				
Percentage		34.4%	65.6%			47.8%	52.2%				
ADT/AADT		ADT 2,793		AADT 2,793							

Counts Unlimited, Inc

PO Box 1178
Corona, CA 92878
Phone: 951-268-6268
email: counts@countsunlimited.com

City of Yucaipa
Oak Glen Road
B/ Jefferson Street - Casa Blanca Avenue
24 Hour Directional Volume Count

YUC007
Site Code: 195-15541

Start Time	29-Sep-15 Tue	Lane 1 Morning	Lane 1 Afternoon	Hour Totals Morning	Hour Totals Afternoon	Lane 2 Morning	Lane 2 Afternoon	Hour Totals Morning	Hour Totals Afternoon	Combined Totals Morning	Combined Totals Afternoon
12:00		5	20			0	24				
12:15		1	24			0	21				
12:30		0	40			0	27				
12:45		3	15	9	99	0	25	0	97	9	196
01:00		1	28			0	20				
01:15		0	21			0	21				
01:30		0	20			0	25				
01:45		0	22	1	91	0	23	0	89	1	180
02:00		1	21			0	24				
02:15		1	**22**			0	**25**				
02:30		0	**35**			0	**23**				
02:45		1	**31**	3	109	0	**27**	0	99	3	208
03:00		1	**32**			0	**32**				
03:15		0	22			0	23				
03:30		3	26			0	18				
03:45		2	26	6	106	0	20	0	93	6	199
04:00		1	25			2	12				
04:15		4	28			0	26				
04:30		2	20			5	16				
04:45		1	28	8	101	4	21	11	75	19	176
05:00		1	30			3	26				
05:15		3	30			6	18				
05:30		1	22			3	27				
05:45		4	26	9	108	13	16	25	87	34	195
06:00		4	26			14	19				
06:15		8	17			18	11				
06:30		14	18			20	19				
06:45		11	25	37	86	**33**	8	85	57	122	143
07:00		9	18			**29**	5				
07:15		15	20			**29**	5				
07:30		20	13			**28**	7				
07:45		23	15	67	66	25	10	111	27	178	93
08:00		11	8			14	8				
08:15		20	6			20	4				
08:30		20	18			16	5				
08:45		18	10	69	42	14	3	64	20	133	62
09:00		18	17			23	3				
09:15		20	8			18	5				
09:30		21	5			14	4				
09:45		23	2	82	32	16	0	71	12	153	44
10:00		25	7			22	1				
10:15		24	5			20	4				
10:30		17	4			15	3				
10:45		**25**	3	91	19	20	2	77	10	168	29
11:00		**25**	3			22	0				
11:15		**35**	2			20	1				
11:30		**35**	3			30	2				
11:45		22	2	117	10	19	0	91	3	208	13
Total		499	869	499	869	535	669	535	669	1034	1538
Combined Total		1368		1368		1204		1204		2572	
AM Peak	-	10:45	-	-	-	06:45	-	-	-	-	-
Vol.	-	120	-	-	-	119	-	-	-	-	-
P.H.F.		0.857				0.902					
PM Peak	-	-	02:15	-	-	-	02:15	-	-	-	-
Vol.	-	-	120	-	-	-	107	-	-	-	-
P.H.F.			0.857				0.836				
Percentage		36.5%	63.5%			44.4%	55.6%				
ADT/AADT		ADT 2,572		AADT 2,572							

Counts Unlimited, Inc

PO Box 1178
Corona, CA 92878
Phone: 951-268-6268
email: counts@countsunlimited.com

City of Yucaipa
Oak Glen Road
E/ Casa Blanca Avenue
24 Hour Directional Volume Count

YUC008
Site Code: 195-15541

Start Time	29-Sep-15 Tue	Northbound Morning	Northbound Afternoon	Hour Totals Morning	Hour Totals Afternoon	Southbound Morning	Southbound Afternoon	Hour Totals Morning	Hour Totals Afternoon	Combined Totals Morning	Combined Totals Afternoon
12:00		2	12			0	**24**				
12:15		1	18			0	**16**				
12:30		0	24			0	**29**				
12:45		3	10	6	64	0	**24**	0	93	6	157
01:00		1	23			0	16				
01:15		0	16			0	18				
01:30		0	14			0	24				
01:45		0	12	1	65	0	19	0	77	1	142
02:00		1	12			0	17				
02:15		0	12			0	18				
02:30		0	19			0	24				
02:45		0	**23**	1	66	0	20	0	79	1	145
03:00		0	**20**			0	29				
03:15		0	**14**			0	18				
03:30		0	**23**			0	14				
03:45		0	19	0	76	0	15	0	76	0	152
04:00		1	15			1	19				
04:15		1	22			0	20				
04:30		1	15			5	12				
04:45		0	21	3	73	1	19	7	70	10	143
05:00		0	17			2	16				
05:15		2	15			4	19				
05:30		0	19			2	15				
05:45		3	13	5	64	11	16	19	66	24	130
06:00		3	16			6	14				
06:15		8	14			9	8				
06:30		11	9			11	16				
06:45		7	24	29	63	**24**	8	50	46	79	109
07:00		7	13			**17**	2				
07:15		13	10			**13**	5				
07:30		18	11			**21**	4				
07:45		20	11	58	45	11	6	62	17	120	62
08:00		8	4			11	4				
08:15		18	4			13	5				
08:30		16	11			9	3				
08:45		18	11	60	30	9	2	42	14	102	44
09:00		18	13			14	2				
09:15		21	6			12	2				
09:30		23	3			10	3				
09:45		20	2	82	24	14	0	50	7	132	31
10:00		22	6			13	1				
10:15		19	1			14	2				
10:30		12	2			13	2				
10:45		**24**	2	77	11	15	1	55	6	132	17
11:00		**23**	3			21	0				
11:15		**23**	2			15	1				
11:30		**23**	2			20	1				
11:45		17	2	86	9	15	0	71	2	157	11
Total		408	590	408	590	356	553	356	553	764	1143
Combined Total		998		998		909		909		1907	
AM Peak	-	10:45	-	-	-	06:45	-	-	-	-	-
Vol.	-	93	-	-	-	75	-	-	-	-	-
P.H.F.		0.969				0.781					
PM Peak	-	-	02:45	-	-	-	12:00	-	-	-	-
Vol.	-	-	80	-	-	-	93	-	-	-	-
P.H.F.			0.870				0.802				
Percentage		40.9%	59.1%			39.2%	60.8%				
ADT/AADT		ADT 1,907		AADT 1,907							

Counts Unlimited, Inc

PO Box 1178
Corona, CA 92878
Phone: 951-268-6268
email: counts@countsunlimited.com

City of Yucaipa
Fir Avenue
E/ Freemont Street
24 Hour Directional Volume Count

YUC005
Site Code: 195-15541

Start Time	29-Sep-15 Tue	Eastbound Morning	Eastbound Afternoon	Hour Totals Morning	Hour Totals Afternoon	Westbound Morning	Westbound Afternoon	Hour Totals Morning	Hour Totals Afternoon	Combined Totals Morning	Combined Totals Afternoon
12:00		1	3			0	2				
12:15		0	3			0	3				
12:30		0	6			0	3				
12:45		0	2	1	14	0	2	0	10	1	24
01:00		1	2			1	3				
01:15		0	2			0	3				
01:30		1	2			0	2				
01:45		0	1	2	7	0	**7**	1	15	3	22
02:00		0	5			0	**3**				
02:15		0	8			0	**4**				
02:30		1	3			0	**6**				
02:45		0	2	1	18	1	1	1	14	2	32
03:00		0	6			0	1				
03:15		0	1			0	2				
03:30		0	1			0	1				
03:45		0	1	0	9	0	3	0	7	0	16
04:00		0	2			1	3				
04:15		0	2			3	1				
04:30		0	2			0	2				
04:45		0	4	0	10	2	5	6	11	6	21
05:00		0	3			0	2				
05:15		0	**5**			0	1				
05:30		0	**5**			1	2				
05:45		0	**5**	0	18	1	5	2	10	2	28
06:00		1	**9**			2	4				
06:15		2	3			2	2				
06:30		0	2			**6**	2				
06:45		1	3	4	17	**7**	2	17	10	21	27
07:00		0	2			**5**	3				
07:15		1	1			**7**	0				
07:30		**4**	0			5	0				
07:45		**5**	1	10	4	1	2	18	5	28	9
08:00		**4**	1			3	3				
08:15		**4**	2			8	0				
08:30		2	3			1	0				
08:45		0	1	10	7	6	0	18	3	28	10
09:00		4	0			4	0				
09:15		1	0			1	1				
09:30		0	1			5	0				
09:45		2	1	7	2	0	0	10	1	17	3
10:00		2	2			2	0				
10:15		0	0			4	0				
10:30		2	1			1	0				
10:45		0	0	4	3	2	0	9	0	13	3
11:00		1	0			1	0				
11:15		3	1			2	0				
11:30		3	3			1	0				
11:45		0	2	7	6	3	0	7	0	14	6
Total		46	115	46	115	89	86	89	86	135	201
Combined Total		161		161		175		175		336	
AM Peak	-	07:30	-	-	-	06:30	-	-	-	-	-
Vol.	-	17	-	-	-	25	-	-	-	-	-
P.H.F.		0.850				0.893					
PM Peak	-	-	05:15	-	-	-	01:45	-	-	-	-
Vol.	-	-	24	-	-	-	20	-	-	-	-
P.H.F.			0.667				0.714				
Percentage		28.6%	71.4%			50.9%	49.1%				
ADT/AADT		ADT 336		AADT 336							

Counts Unlimited, Inc

PO Box 1178
Corona, CA 92878
Phone: 951-268-6268
email: counts@countsunlimited.com

City of Yucipa
Pendleton Road
S/ Oak Glen Road
24 Hour Directional Volume Count

YUC003
Site Code: 195-15541

Start Time	29-Sep-15 Tue	Northbound Morning	Northbound Afternoon	Hour Totals Morning	Hour Totals Afternoon	Southbound Morning	Southbound Afternoon	Hour Totals Morning	Hour Totals Afternoon	Combined Totals Morning	Combined Totals Afternoon
12:00		0	0			0	5				
12:15		1	1			1	3				
12:30		0	5			1	3				
12:45		1	2	2	8	0	5	2	16	4	24
01:00		1	**4**			1	5				
01:15		0	**9**			0	2				
01:30		0	**3**			0	2				
01:45		0	**5**	1	21	1	2	2	11	3	32
02:00		0	4			0	3				
02:15		0	2			0	7				
02:30		0	6			1	4				
02:45		1	4	1	16	0	6	1	20	2	36
03:00		0	6			0	7				
03:15		0	3			0	5				
03:30		0	1			0	6				
03:45		1	1	1	11	0	5	0	23	1	34
04:00		0	8			0	2				
04:15		0	3			0	6				
04:30		0	1			0	3				
04:45		0	4	0	16	1	4	1	15	1	31
05:00		1	2			0	5				
05:15		1	4			0	3				
05:30		4	2			0	**9**				
05:45		5	2	11	10	0	**8**	0	25	11	35
06:00		4	4			0	**9**				
06:15		2	5			0	**5**				
06:30		6	5			1	5				
06:45		2	2	14	16	1	4	2	23	16	39
07:00		7	1			1	5				
07:15		4	2			2	4				
07:30		**7**	0			**4**	2				
07:45		**11**	6	29	9	**3**	2	10	13	39	22
08:00		**6**	0			**4**	2				
08:15		**6**	2			**5**	2				
08:30		5	1			1	2				
08:45		4	1	21	4	0	0	10	6	31	10
09:00		4	3			2	0				
09:15		0	0			0	2				
09:30		1	2			1	1				
09:45		4	0	9	5	2	2	5	5	14	10
10:00		4	0			2	0				
10:15		4	0			5	2				
10:30		1	0			0	1				
10:45		2	0	11	0	0	1	7	4	18	4
11:00		5	0			4	0				
11:15		3	0			4	2				
11:30		1	2			3	2				
11:45		5	0	14	2	2	2	13	6	27	8
Total		114	118	114	118	53	167	53	167	167	285
Combined Total		232		232		220		220		452	
AM Peak	-	07:30	-	-	-	07:30	-	-	-	-	-
Vol.	-	30	-	-	-	16	-	-	-	-	-
P.H.F.		0.682				0.800					
PM Peak	-	-	01:00	-	-	-	05:30	-	-	-	-
Vol.	-	-	21	-	-	-	31	-	-	-	-
P.H.F.			0.583				0.861				
Percentage		49.1%	50.9%			24.1%	75.9%				
ADT/AADT		ADT 452		AADT 452							

Counts Unlimited, Inc

PO Box 1178
Corona, CA 92878
Phone: 951-268-6268
email: counts@countsunlimited.com

City of Yucaipa
Cherry Croft Road
N/ Oak Glen Road
24 Hour Directional Volume Count

YUC010
Site Code: 195-15541

Start Time	29-Sep-15 Tue	Northbound Morning	Northbound Afternoon	Hour Totals Morning	Hour Totals Afternoon	Southbound Morning	Southbound Afternoon	Hour Totals Morning	Hour Totals Afternoon	Combined Totals Morning	Combined Totals Afternoon
12:00		0	0			0	0				
12:15		0	0			0	1				
12:30		0	0			0	0				
12:45		0	0	0	0	0	0	0	1	0	1
01:00		0	1			0	1				
01:15		0	0			0	0				
01:30		0	0			0	0				
01:45		0	1	0	2	0	0	0	1	0	3
02:00		0	0			0	0				
02:15		0	0			0	**0**				
02:30		0	0			0	**0**				
02:45		0	1	0	1	0	**2**	0	2	0	3
03:00		0	0			0	**2**				
03:15		0	1			0	0				
03:30		1	0			0	0				
03:45		1	1	2	2	0	0	0	2	2	4
04:00		0	0			0	0				
04:15		0	0			0	0				
04:30		0	0			0	0				
04:45		0	1	0	1	0	0	0	0	0	1
05:00		0	0			0	0				
05:15		0	0			0	0				
05:30		0	0			0	0				
05:45		0	**0**	0	0	0	0	0	0	0	0
06:00		0	**1**			0	0				
06:15		0	**1**			0	0				
06:30		2	**1**			0	1				
06:45		0	0	2	3	0	0	0	1	2	4
07:00		0	1			0	1				
07:15		1	0			0	0				
07:30		0	0			**0**	0				
07:45		0	0	1	1	**0**	0	0	1	1	2
08:00		2	0			**0**	0				
08:15		1	0			**1**	0				
08:30		0	0			0	0				
08:45		0	0	3	0	0	0	1	0	4	0
09:00		0	0			0	0				
09:15		0	0			0	0				
09:30		0	0			0	0				
09:45		0	0	0	0	0	1	0	1	0	1
10:00		0	0			0	0				
10:15		0	0			0	0				
10:30		0	0			1	0				
10:45		**0**	0	0	0	0	0	1	0	1	0
11:00		**3**	2			0	2				
11:15		**3**	0			0	0				
11:30		**1**	0			0	0				
11:45		0	0	7	2	1	0	1	2	8	4
Total		15	12	15	12	3	11	3	11	18	23
Combined Total		27		27		14		14		41	
AM Peak	-	10:45	-	-	-	07:30	-	-	-	-	-
Vol.	-	7	-	-	-	1	-	-	-	-	-
P.H.F.		0.583				0.250					
PM Peak	-	-	05:45	-	-	-	02:15	-	-	-	-
Vol.	-	-	3	-	-	-	4	-	-	-	-
P.H.F.			0.750				0.500				
Percentage		55.6%	44.4%			21.4%	78.6%				
ADT/AADT		ADT 41		AADT 41							

Counts Unlimited, Inc

PO Box 1178
Corona, CA 92878
Phone: 951-268-6268
email: counts@countsunlimited.com

City of Yucaipa
Date Street
N/ Oak Glen Road
24 Hour Directional Volume Count

YUC004
Site Code: 195-15541

Start Time	29-Sep-15 Tue	Northbound Morning	Northbound Afternoon	Hour Totals Morning	Hour Totals Afternoon	Southbound Morning	Southbound Afternoon	Hour Totals Morning	Hour Totals Afternoon	Combined Totals Morning	Combined Totals Afternoon
12:00		1	6			1	8				
12:15		0	4			1	11				
12:30		0	0			0	4				
12:45		1	3	2	13	1	8	3	31	5	44
01:00		0	4			1	9				
01:15		0	4			1	6				
01:30		2	9			2	6				
01:45		0	2	2	19	0	8	4	29	6	48
02:00		0	1			0	6				
02:15		0	5			0	9				
02:30		0	2			0	6				
02:45		0	4	0	12	0	10	0	31	0	43
03:00		0	7			0	11				
03:15		0	4			0	9				
03:30		0	6			1	8				
03:45		0	4	0	21	0	7	1	35	1	56
04:00		0	2			1	6				
04:15		0	3			2	8				
04:30		0	3			2	8				
04:45		1	3	1	11	2	8	7	30	8	41
05:00		0	5			2	8				
05:15		1	3			1	5				
05:30		0	4			1	**13**				
05:45		0	**6**	1	18	1	**12**	5	38	6	56
06:00		1	**11**			3	**10**				
06:15		2	**11**			5	**7**				
06:30		0	**7**			5	3				
06:45		2	3	5	32	3	6	16	26	21	58
07:00		1	5			6	6				
07:15		2	1			8	6				
07:30		4	2			6	4				
07:45		4	2	11	10	5	6	25	22	36	32
08:00		2	2			5	4				
08:15		1	2			5	4				
08:30		3	3			6	4				
08:45		0	1	6	8	8	4	24	16	30	24
09:00		4	0			3	2				
09:15		1	1			12	2				
09:30		4	1			7	3				
09:45		7	1	16	3	11	0	33	7	49	10
10:00		1	0			3	2				
10:15		2	1			5	3				
10:30		2	0			4	0				
10:45		4	0	9	1	**8**	1	20	6	29	7
11:00		**5**	1			**7**	0				
11:15		**5**	0			**10**	2				
11:30		**3**	1			**10**	0				
11:45		**8**	0	21	2	6	0	33	2	54	4
Total		74	150	74	150	171	273	171	273	245	423
Combined Total		224		224		444		444		668	
AM Peak	-	11:00	-	-	-	10:45	-	-	-	-	-
Vol.	-	21	-	-	-	35	-	-	-	-	-
P.H.F.		0.656				0.729					
PM Peak	-	-	05:45	-	-	-	05:30	-	-	-	-
Vol.	-	-	35	-	-	-	42	-	-	-	-
P.H.F.			0.795				0.808				
Percentage		33.0%	67.0%			38.5%	61.5%				
ADT/AADT		ADT 668		AADT 668							

Counts Unlimited, Inc

PO Box 1178
Corona, CA 92878
Phone: 951-268-6268
email: counts@countsunlimited.com

City of Yucaipa
Date Street
E/ Bryant Street
24 Hour Directional Volume Count

YUC009
Site Code: 195-15541

Start Time	29-Sep-15 Tue	Eastbound Morning	Eastbound Afternoon	Hour Totals Morning	Hour Totals Afternoon	Westbound Morning	Westbound Afternoon	Hour Totals Morning	Hour Totals Afternoon	Combined Totals Morning	Combined Totals Afternoon
12:00		2	12			0	10				
12:15		0	14			0	34				
12:30		0	14			0	25				
12:45		0	12	2	52	1	26	1	95	3	147
01:00		0	21			1	27				
01:15		1	16			0	28				
01:30		0	16			1	37				
01:45		1	26	2	79	0	30	2	122	4	201
02:00		0	12			1	44				
02:15		0	42			1	39				
02:30		0	32			2	33				
02:45		2	52	2	138	0	39	4	155	6	293
03:00		0	32			1	30				
03:15		0	29			1	32				
03:30		0	45			1	35				
03:45		1	39	1	145	2	23	5	120	6	265
04:00		0	33			2	27				
04:15		0	28			6	35				
04:30		1	34			9	33				
04:45		0	**38**	1	133	11	40	28	135	29	268
05:00		2	**38**			11	30				
05:15		1	**42**			8	**36**				
05:30		1	**48**			12	**43**				
05:45		2	34	6	162	18	**43**	49	152	55	314
06:00		1	21			31	**36**				
06:15		6	31			28	21				
06:30		14	22			32	41				
06:45		10	23	31	97	**44**	27	135	125	166	222
07:00		5	30			**58**	17				
07:15		**16**	14			**70**	13				
07:30		**23**	21			**54**	22				
07:45		**40**	23	84	88	33	14	215	66	299	154
08:00		**27**	21			26	17				
08:15		9	18			26	13				
08:30		8	15			34	12				
08:45		9	18	53	72	35	13	121	55	174	127
09:00		14	8			23	10				
09:15		9	8			20	9				
09:30		17	9			20	5				
09:45		11	4	51	29	24	6	87	30	138	59
10:00		8	9			24	7				
10:15		13	1			27	0				
10:30		15	2			24	3				
10:45		10	6	46	18	18	6	93	16	139	34
11:00		10	2			23	0				
11:15		15	2			31	2				
11:30		15	2			17	4				
11:45		14	1	54	7	13	1	84	7	138	14
Total		333	1020	333	1020	824	1078	824	1078	1157	2098
Combined Total		1353		1353		1902		1902		3255	
AM Peak	-	07:15	-	-	-	06:45	-	-	-	-	-
Vol.	-	106	-	-	-	226	-	-	-	-	-
P.H.F.		0.663				0.807					
PM Peak	-	-	04:45	-	-	-	05:15	-	-	-	-
Vol.	-	-	166	-	-	-	158	-	-	-	-
P.H.F.			0.798				0.919				
Percentage		24.6%	75.4%			43.3%	56.7%				
ADT/AADT		ADT 3,255		AADT 3,255							

APPENDIX B

INTERSECTION ANALYSIS WORKSHEETS

EXISTING CONDITIONS

Wilson Creek Estates
Traffic Impact Analysis

Level Of Service Computation Report
2000 HCM Operations Method (Base Volume Alternative)

Intersection #1 Oak Glen Rd & Bryant St

Cycle (sec): 60 Critical Vol./Cap. (X): 0.891
Loss Time (sec): 4 (Y+R = 4 sec) Average Delay (sec/veh): 28.6
Optimal Cycle:OPTIMIZED Level Of Service: C

Approach:	North Bound			South Bound			East Bound			West Bound		
Movement:	L - T - R			L - T - R			L - T - R			L - T - R		
Control:	Protected			Protected			Protected			Protected		
Rights:	Include			Include			Include			Include		
Min. Green:	0	0	0	0	0	0	0	0	0	0	0	0
Lanes:	1 0 2 0 1			1 0 2 0 1			1 0 1 0 1			1 0 1 0 1		
Volume Module:												
Base Vol:	313	358	53	31	353	439	200	95	264	45	213	50
Growth Adj:	1.00	1.00	1.00	1.00	1.00	1.00	1.00	1.00	1.00	1.00	1.00	1.00
Initial Bse:	313	358	53	31	353	439	200	95	264	45	213	50
User Adj:	1.00	1.00	1.00	1.00	1.00	1.00	1.00	1.00	1.00	1.00	1.00	1.00
PHF Adj:	0.80	0.80	0.80	0.80	0.80	0.80	0.80	0.80	0.80	0.80	0.80	0.80
PHF Volume:	391	447	66	39	441	549	250	119	330	56	266	63
Reduct Vol:	0	0	0	0	0	0	0	0	0	0	0	0
Reduced Vol:	391	447	66	39	441	549	250	119	330	56	266	63
PCE Adj:	1.00	1.00	1.00	1.00	1.00	1.00	1.00	1.00	1.00	1.00	1.00	1.00
MLF Adj:	1.00	1.00	1.00	1.00	1.00	1.00	1.00	1.00	1.00	1.00	1.00	1.00
Final Vol.:	391	447	66	39	441	549	250	119	330	56	266	63
Saturation Flow Module:												
Sat/Lane:	1800	1800	1800	1800	1800	1800	1800	1800	1800	1800	1800	1800
Adjustment:	0.94	1.00	1.00	0.94	1.00	1.00	0.94	1.00	1.00	0.94	1.00	1.00
Lanes:	1.00	2.00	1.00	1.00	2.00	1.00	1.00	1.00	1.00	1.00	1.00	1.00
Final Sat.:	1692	3600	1800	1692	3600	1800	1692	1800	1800	1692	1800	1800
Capacity Analysis Module:												
Vol/Sat:	0.23	0.12	0.04	0.02	0.12	0.30	0.15	0.07	0.18	0.03	0.15	0.03
Crit Moves:	****					****	****				****	
Green/Cycle:	0.26	0.51	0.51	0.09	0.34	0.34	0.17	0.28	0.28	0.05	0.17	0.17
Volume/Cap:	0.89	0.24	0.07	0.24	0.36	0.89	0.89	0.23	0.65	0.65	0.89	0.21
Delay/Veh:	41.2	8.4	7.6	26.0	15.0	33.8	52.2	16.9	22.0	44.4	50.9	22.0
User DelAdj:	1.00	1.00	1.00	1.00	1.00	1.00	1.00	1.00	1.00	1.00	1.00	1.00
AdjDel/Veh:	41.2	8.4	7.6	26.0	15.0	33.8	52.2	16.9	22.0	44.4	50.9	22.0
HCM2kAvg:	11	2	1	1	3	14	8	2	7	2	8	1

Wilson Creek Estates
Traffic Impact Analysis

Level Of Service Computation Report
2000 HCM Operations Method (Base Volume Alternative)

Intersection #2 Bryant St & Fir Ave

Cycle (sec): 60 Critical Vol./Cap. (X): 0.486
Loss Time (sec): 4 (Y+R = 4 sec) Average Delay (sec/veh): 12.1
Optimal Cycle: 21 Level Of Service: B

Approach:	North Bound				South Bound				East Bound				West Bound			
Movement:	L	- T	- R		L	- T	- R		L	- T	- R		L	- T	- R	
Control:	Permitted				Permitted				Permitted				Permitted			
Rights:	Include				Include				Include				Include			
Min. Green:	0	0	0		0	0	0		0	0	0		0	0	0	
Lanes:	1	0 2	0 1		1	0 1	1 0		0	0 1!	0 0		0	0 1!	0 0	
Volume Module:																
Base Vol:	241	322	11		4	385	17		60	15	294		35	16	8	
Growth Adj:	1.00	1.00	1.00		1.00	1.00	1.00		1.00	1.00	1.00		1.00	1.00	1.00	
Initial Bse:	241	322	11		4	385	17		60	15	294		35	16	8	
User Adj:	1.00	1.00	1.00		1.00	1.00	1.00		1.00	1.00	1.00		1.00	1.00	1.00	
PHF Adj:	0.77	0.77	0.77		0.77	0.77	0.77		0.77	0.77	0.77		0.77	0.77	0.77	
PHF Volume:	313	418	14		5	500	22		78	19	382		45	21	10	
Reduct Vol:	0	0	0		0	0	0		0	0	0		0	0	0	
Reduced Vol:	313	418	14		5	500	22		78	19	382		45	21	10	
PCE Adj:	1.00	1.00	1.00		1.00	1.00	1.00		1.00	1.00	1.00		1.00	1.00	1.00	
MLF Adj:	1.00	1.00	1.00		1.00	1.00	1.00		1.00	1.00	1.00		1.00	1.00	1.00	
Final Vol.:	313	418	14		5	500	22		78	19	382		45	21	10	
Saturation Flow Module:																
Sat/Lane:	1800	1800	1800		1800	1800	1800		1800	1800	1800		1800	1800	1800	
Adjustment:	0.94	1.00	1.00		0.94	1.00	1.00		0.94	1.00	1.00		0.94	1.00	1.00	
Lanes:	1.00	2.00	1.00		1.00	1.92	0.08		0.17	0.04	0.79		0.61	0.26	0.13	
Final Sat.:	1692	3600	1800		1692	3448	152		290	72	1419		1029	470	235	
Capacity Analysis Module:																
Vol/Sat:	0.18	0.12	0.01		0.00	0.15	0.15		0.27	0.27	0.27		0.04	0.04	0.04	
Crit Moves:	****									****						
Green/Cycle:	0.38	0.38	0.38		0.38	0.38	0.38		0.55	0.55	0.55		0.55	0.55	0.55	
Volume/Cap:	0.49	0.31	0.02		0.01	0.38	0.38		0.49	0.49	0.49		0.08	0.08	0.08	
Delay/Veh:	14.7	13.2	11.6		11.6	13.7	13.7		8.6	8.6	8.6		6.3	6.3	6.3	
User DelAdj:	1.00	1.00	1.00		1.00	1.00	1.00		1.00	1.00	1.00		1.00	1.00	1.00	
AdjDel/Veh:	14.7	13.2	11.6		11.6	13.7	13.7		8.6	8.6	8.6		6.3	6.3	6.3	
HCM2kAvg:	5	3	0		0	4	4		6	6	6		1	1	1	

Wilson Creek Estates
Traffic Impact Analysis

Level Of Service Computation Report
2000 HCM Unsignalized Method (Base Volume Alternative)

Intersection #3 Bryant St & Carter St

Average Delay (sec/veh): 2.3 Worst Case Level Of Service: C[19.0]

Approach:	North Bound			South Bound			East Bound			West Bound		
Movement:	L	T	R	L	T	R	L	T	R	L	T	R
Control:	Uncontrolled			Uncontrolled			Stop Sign			Stop Sign		
Rights:	Include			Include			Include			Include		
Lanes:	1 0 0 1 0			1 0 0 1 0			0 0 1! 0 0			0 0 1! 0 0		
Volume Module:												
Base Vol:	5	404	30	2	297	2	8	0	16	51	0	33
Growth Adj:	1.00	1.00	1.00	1.00	1.00	1.00	1.00	1.00	1.00	1.00	1.00	1.00
Initial Bse:	5	404	30	2	297	2	8	0	16	51	0	33
User Adj:	1.00	1.00	1.00	1.00	1.00	1.00	1.00	1.00	1.00	1.00	1.00	1.00
PHF Adj:	0.88	0.88	0.88	0.88	0.88	0.88	0.88	0.88	0.88	0.88	0.88	0.88
PHF Volume:	6	459	34	2	338	2	9	0	18	58	0	38
Reduct Vol:	0	0	0	0	0	0	0	0	0	0	0	0
Final Vol.:	6	459	34	2	338	2	9	0	18	58	0	38
Critical Gap Module:												
Critical Gp:	4.1	xxxx	xxxxx	4.1	xxxx	xxxxx	7.1	xxxx	6.2	7.1	xxxx	6.2
FollowUpTim:	2.2	xxxx	xxxxx	2.2	xxxx	xxxxx	3.5	xxxx	3.3	3.5	xxxx	3.3
Capacity Module:												
Cnflict Vol:	340	xxxx	xxxxx	493	xxxx	xxxxx	849	xxxx	339	840	xxxx	476
Potent Cap.:	1231	xxxx	xxxxx	1081	xxxx	xxxxx	283	xxxx	708	287	xxxx	593
Move Cap.:	1231	xxxx	xxxxx	1081	xxxx	xxxxx	264	xxxx	708	278	xxxx	593
Volume/Cap:	0.00	xxxx	xxxx	0.00	xxxx	xxxx	0.03	xxxx	0.03	0.21	xxxx	0.06
Level Of Service Module:												
Queue:	0.0	xxxx	xxxxx	0.0	xxxx	xxxxx	xxxxx	xxxx	xxxxx	xxxxx	xxxx	xxxxx
Stopped Del:	7.9	xxxx	xxxxx	8.3	xxxx	xxxxx	xxxxx	xxxx	xxxxx	xxxxx	xxxx	xxxxx
LOS by Move:	A	*	*	A	*	*	*	*	*	*	*	*
Movement:	LT	LTR	RT	LT	LTR	RT	LT	LTR	RT	LT	LTR	RT
Shared Cap.:	xxxx	xxxx	xxxxx	xxxx	xxxx	xxxxx	xxxx	453	xxxxx	xxxx	352	xxxxx
SharedQueue:	xxxxx	xxxx	xxxxx	xxxxx	xxxx	xxxxx	xxxxx	0.2	xxxxx	xxxxx	1.1	xxxxx
Shrd StpDel:	xxxxx	xxxx	xxxxx	xxxxx	xxxx	xxxxx	xxxxx	13.4	xxxxx	xxxxx	19.0	xxxxx
Shared LOS:	*	*	*	*	*	*	*	B	*	*	C	*
ApproachDel:	xxxxxx			xxxxxx			13.4			19.0		
ApproachLOS:	*			*			B			C		

Wilson Creek Estates
Traffic Impact Analysis

Level Of Service Computation Report
2000 HCM Unsignalized Method (Base Volume Alternative)

Intersection #4 Carter St & Jefferson St

Average Delay (sec/veh): 1.5 Worst Case Level Of Service: A[9.2]

Approach:	North Bound					South Bound					East Bound					West Bound				
Movement:	L	-	T	-	R	L	-	T	-	R	L	-	T	-	R	L	-	T	-	R
Control:	Stop Sign					Stop Sign					Uncontrolled					Uncontrolled				
Rights:	Include					Include					Include					Include				
Lanes:	0	0	1	0	0	1	0	0	0	0	0	1	0	0	0	0	0	1	0	0
Volume Module:																				
Base Vol:	0	1	0	2	0	0	1	8	0	0	10	0								
Growth Adj:	1.00	1.00	1.00	1.00	1.00	1.00	1.00	1.00	1.00	1.00	1.00	1.00								
Initial Bse:	0	1	0	2	0	0	1	8	0	0	10	0								
User Adj:	1.00	1.00	1.00	1.00	1.00	1.00	1.00	1.00	1.00	1.00	1.00	1.00								
PHF Adj:	0.69	0.69	0.69	0.69	0.69	0.69	0.69	0.69	0.69	0.69	0.69	0.69								
PHF Volume:	0	1	0	3	0	0	1	12	0	0	14	0								
Reduct Vol:	0	0	0	0	0	0	0	0	0	0	0	0								
Final Vol.:	0	1	0	3	0	0	1	12	0	0	14	0								
Critical Gap Module:																				
Critical Gp:	xxxxx	6.5	xxxxx	7.1	xxxx	xxxxx	4.1	xxxx	xxxxx	xxxxx	xxxx	xxxxx								
FollowUpTim:	xxxxx	4.0	xxxxx	3.5	xxxx	xxxxx	2.2	xxxx	xxxxx	xxxxx	xxxx	xxxxx								
Capacity Module:																				
Cnflict Vol:	xxxx	29	xxxxx	30	xxxx	xxxxx	14	xxxx	xxxxx	xxxx	xxxx	xxxxx								
Potent Cap.:	xxxx	868	xxxxx	984	xxxx	xxxxx	1617	xxxx	xxxxx	xxxx	xxxx	xxxxx								
Move Cap.:	xxxx	867	xxxxx	982	xxxx	xxxxx	1617	xxxx	xxxxx	xxxx	xxxx	xxxxx								
Volume/Cap:	xxxx	0.00	xxxx	0.00	xxxx	xxxx	0.00	xxxx	xxxx	xxxx	xxxx	xxxx								
Level Of Service Module:																				
Queue:	xxxxx	0.0	xxxxx	0.0	xxxx	xxxxx	0.0	xxxx	xxxxx	xxxxx	xxxx	xxxxx								
Stopped Del:	xxxxx	9.2	xxxxx	8.7	xxxx	xxxxx	7.2	xxxx	xxxxx	xxxxx	xxxx	xxxxx								
LOS by Move:	*	A	*	A	*	*	A	*	*	*	*	*								
Movement:	LT -	LTR -	RT	LT -	LTR -	RT	LT -	LTR -	RT	LT -	LTR -	RT								
Shared Cap.:	xxxx	xxxx	xxxxx	xxxx	xxxx	xxxxx	xxxx	xxxx	xxxxx	xxxx	xxxx	xxxxx								
SharedQueue:	xxxxx	xxxx	xxxxx	xxxxx	xxxx	xxxxx	0.0	xxxx	xxxxx	xxxxx	xxxx	xxxxx								
Shrd StpDel:	xxxxx	xxxx	xxxxx	xxxxx	xxxx	xxxxx	7.2	xxxx	xxxxx	xxxxx	xxxx	xxxxx								
Shared LOS:	*	*	*	*	*	*	A	*	*	*	*	*								
ApproachDel:	9.2			8.7			xxxxxx			xxxxxx										
ApproachLOS:	A			A			*			*										

Wilson Creek Estates
Traffic Impact Analysis

Level Of Service Computation Report
2000 HCM Unsignalized Method (Base Volume Alternative)

Intersection #5 Oak Glen Rd & Pendleton Rd

Average Delay (sec/veh): 1.4 Worst Case Level Of Service: A[9.6]

Approach:	North Bound						South Bound						East Bound						West Bound					
Movement:	L	-	T	-	R		L	-	T	-	R		L	-	T	-	R		L	-	T	-	R	
Control:	Stop Sign						Stop Sign						Uncontrolled						Uncontrolled					
Rights:	Include						Include						Include						Include					
Lanes:	0	0	1!	0	0		0	0	1!	0	0		0	0	0	1	0		0	0	1	0	0	
Volume Module:																								
Base Vol:	26		0		4		0		0		0		0		51		10		0		117		0	
Growth Adj:	1.00	1.00	1.00	1.00	1.00	1.00	1.00	1.00	1.00	1.00	1.00	1.00	1.00	1.00	1.00	1.00	1.00	1.00	1.00	1.00	1.00	1.00	1.00	1.00
Initial Bse:	26		0		4		0		0		0		0		51		10		0		117		0	
User Adj:	1.00	1.00	1.00	1.00	1.00	1.00	1.00	1.00	1.00	1.00	1.00	1.00	1.00	1.00	1.00	1.00	1.00	1.00	1.00	1.00	1.00	1.00	1.00	1.00
PHF Adj:	0.84	0.84	0.84	0.84	0.84	0.84	0.84	0.84	0.84	0.84	0.84	0.84	0.84	0.84	0.84	0.84	0.84	0.84	0.84	0.84	0.84	0.84	0.84	0.84
PHF Volume:	31		0		5		0		0		0		0		61		12		0		139		0	
Reduct Vol:	0		0		0		0		0		0		0		0		0		0		0		0	
Final Vol.:	31		0		5		0		0		0		0		61		12		0		139		0	
Critical Gap Module:																								
Critical Gp:	6.4	xxxx			6.2	xxxxx	xxxx	xxxxx	xxxxx	xxxx	xxxxx	xxxxx	xxxx	xxxxx										
FollowUpTim:	3.5	xxxx			3.3	xxxxx	xxxx	xxxxx	xxxxx	xxxx	xxxxx	xxxxx	xxxx	xxxxx										
Capacity Module:																								
Cnflict Vol:	206	xxxx			67	xxxx	xxxx	xxxxx	xxxx	xxxx	xxxxx	xxxx	xxxx	xxxxx										
Potent Cap.:	787	xxxx			1003	xxxx	xxxx	xxxxx	xxxx	xxxx	xxxxx	xxxx	xxxx	xxxxx										
Move Cap.:	787	xxxx			1003	xxxx	xxxx	xxxxx	xxxx	xxxx	xxxxx	xxxx	xxxx	xxxxx										
Volume/Cap:	0.04	xxxx			0.00	xxxx	xxxx	xxxx	xxxx	xxxx	xxxx	xxxx	xxxx	xxxx										
Level Of Service Module:																								
Queue:	xxxxx	xxxx	xxxxx	xxxxx	xxxx	xxxxx	xxxxx	xxxx	xxxxx	xxxxx	xxxx	xxxxx												
Stopped Del:	xxxxx	xxxx	xxxxx	xxxxx	xxxx	xxxxx	xxxxx	xxxx	xxxxx	xxxxx	xxxx	xxxxx												
LOS by Move:	*	*	*	*	*	*	*	*	*	*	*	*												
Movement:	LT	-	LTR	-	RT		LT	-	LTR	-	RT		LT	-	LTR	-	RT		LT	-	LTR	-	RT	
Shared Cap.:	xxxx		810	xxxxx		xxxx		0	xxxxx		xxxx	xxxx	xxxxx		xxxx	xxxx	xxxxx							
SharedQueue:	xxxxx		0.1	xxxxx	xxxxx	xxxx	xxxxx	xxxxx	xxxx	xxxxx	xxxxx	xxxx	xxxxx											
Shrd StpDel:	xxxxx		9.6	xxxxx	xxxxx	xxxx	xxxxx	xxxxx	xxxx	xxxxx	xxxxx	xxxx	xxxxx											
Shared LOS:	*		A	*	*	*	*	*	*	*	*	*	*											
ApproachDel:			9.6			xxxxxx				xxxxxx				xxxxxx										
ApproachLOS:			A			*				*				*										

Wilson Creek Estates
Traffic Impact Analysis

Level Of Service Computation Report
2000 HCM Unsignalized Method (Base Volume Alternative)

Intersection #6 Oak Glen Rd & Casa Blance Rd

Average Delay (sec/veh): 2.1 Worst Case Level Of Service: A[9.5]

Approach:	North Bound					South Bound					East Bound					West Bound				
Movement:	L	-	T	-	R	L	-	T	-	R	L	-	T	-	R	L	-	T	-	R
Control:	Stop Sign					Stop Sign					Uncontrolled					Uncontrolled				
Rights:	Include					Include					Include					Include				
Lanes:	1	0	0	0	0	0	0	1!	0	0	0	0	0	1	0	0	0	1	0	0
Volume Module:																				
Base Vol:	37	0	0	0	0	0	0	0	0	0	0	44	10	0	0	0	79	0	0	0
Growth Adj:	1.00	1.00	1.00	1.00	1.00	1.00	1.00	1.00	1.00	1.00	1.00	1.00	1.00	1.00	1.00	1.00	1.00	1.00	1.00	1.00
Initial Bse:	37	0	0	0	0	0	0	0	0	0	0	44	10	0	0	0	79	0	0	0
User Adj:	1.00	1.00	1.00	1.00	1.00	1.00	1.00	1.00	1.00	1.00	1.00	1.00	1.00	1.00	1.00	1.00	1.00	1.00	1.00	1.00
PHF Adj:	0.87	0.87	0.87	0.87	0.87	0.87	0.87	0.87	0.87	0.87	0.87	0.87	0.87	0.87	0.87	0.87	0.87	0.87	0.87	0.87
PHF Volume:	43	0	0	0	0	0	0	0	0	0	0	51	11	0	0	0	91	0	0	0
Reduct Vol:	0	0	0	0	0	0	0	0	0	0	0	0	0	0	0	0	0	0	0	0
Final Vol.:	43	0	0	0	0	0	0	0	0	0	0	51	11	0	0	0	91	0	0	0
Critical Gap Module:																				
Critical Gp:	6.4	xxxx	xxxxx	xxxxx	xxxx	xxxxx	xxxxx	xxxx	xxxxx	xxxxx	xxxx	xxxxx								
FollowUpTim:	3.5	xxxx	xxxxx	xxxxx	xxxx	xxxxx	xxxxx	xxxx	xxxxx	xxxxx	xxxx	xxxxx								
Capacity Module:																				
Cnflict Vol:	147	xxxx	xxxxx	xxxx	xxxx	xxxxx	xxxx	xxxx	xxxxx	xxxx	xxxx	xxxxx								
Potent Cap.:	850	xxxx	xxxxx	xxxx	xxxx	xxxxx	xxxx	xxxx	xxxxx	xxxx	xxxx	xxxxx								
Move Cap.:	850	xxxx	xxxxx	xxxx	xxxx	xxxxx	xxxx	xxxx	xxxxx	xxxx	xxxx	xxxxx								
Volume/Cap:	0.05	xxxx	xxxx	xxxx	xxxx	xxxx	xxxx	xxxx	xxxx	xxxx	xxxx	xxxx								
Level Of Service Module:																				
Queue:	0.2	xxxx	xxxxx	xxxxx	xxxx	xxxxx	xxxxx	xxxx	xxxxx	xxxxx	xxxx	xxxxx								
Stopped Del:	9.5	xxxx	xxxxx	xxxxx	xxxx	xxxxx	xxxxx	xxxx	xxxxx	xxxxx	xxxx	xxxxx								
LOS by Move:	A	*	*	*	*	*	*	*	*	*	*	*								
Movement:	LT	-	LTR	-	RT	LT	-	LTR	-	RT	LT	-	LTR	-	RT	LT	-	LTR	-	RT
Shared Cap.:	xxxx	xxxx	xxxxx	xxxx	0	xxxxx	xxxx	xxxx	xxxxx	xxxx	xxxx	xxxxx								
SharedQueue:	xxxxx	xxxx	xxxxx	xxxxx	xxxx	xxxxx	xxxxx	xxxx	xxxxx	xxxxx	xxxx	xxxxx								
Shrd StpDel:	xxxxx	xxxx	xxxxx	xxxxx	xxxx	xxxxx	xxxxx	xxxx	xxxxx	xxxxx	xxxx	xxxxx								
Shared LOS:	*	*	*	*	*	*	*	*	*	*	*	*								
ApproachDel:	9.5			xxxxxx			xxxxxx				xxxxxx									
ApproachLOS:	A			*			*				*									

Wilson Creek Estates
Traffic Impact Analysis

Level Of Service Computation Report
2000 HCM Unsignalized Method (Base Volume Alternative)

Intersection #7 Oak Glen Rd & Cherry Croft Rd

Average Delay (sec/veh): 0.0 Worst Case Level Of Service: A[9.2]

Approach:	North Bound					South Bound					East Bound					West Bound				
Movement:	L	-	T	-	R	L	-	T	-	R	L	-	T	-	R	L	-	T	-	R
Control:	Stop Sign					Stop Sign					Uncontrolled					Uncontrolled				
Rights:	Include					Include					Include					Include				
Lanes:	0	0	0	0	0	0	0	0	0	1	1	0	1	0	0	0	0	1	0	0
Volume Module:																				
Base Vol:	0	0	0	0	0	0	1	0	60	0	0	144	0							
Growth Adj:	1.00	1.00	1.00	1.00	1.00	1.00	1.00	1.00	1.00	1.00	1.00	1.00								
Initial Bse:	0	0	0	0	0	0	1	0	60	0	0	144	0							
User Adj:	1.00	1.00	1.00	1.00	1.00	1.00	1.00	1.00	1.00	1.00	1.00	1.00								
PHF Adj:	0.80	0.80	0.80	0.80	0.80	0.80	0.80	0.80	0.80	0.80	0.80	0.80								
PHF Volume:	0	0	0	0	0	0	1	0	75	0	0	180	0							
Reduct Vol:	0	0	0	0	0	0	0	0	0	0	0	0	0							
Final Vol.:	0	0	0	0	0	0	1	0	75	0	0	180	0							
Critical Gap Module:																				
Critical Gp:	xxxxx	xxxx	xxxxx	xxxxx	xxxx	6.2	xxxxx	xxxx	xxxxx	xxxxx	xxxx	xxxxx								
FollowUpTim:	xxxxx	xxxx	xxxxx	xxxxx	xxxx	3.3	xxxxx	xxxx	xxxxx	xxxxx	xxxx	xxxxx								
Capacity Module:																				
Cnflict Vol:	xxxx	xxxx	xxxxx	xxxx	xxxx	180	xxxx	xxxx	xxxxx	xxxx	xxxx	xxxxx								
Potent Cap.:	xxxx	xxxx	xxxxx	xxxx	xxxx	868	xxxx	xxxx	xxxxx	xxxx	xxxx	xxxxx								
Move Cap.:	xxxx	xxxx	xxxxx	xxxx	xxxx	868	xxxx	xxxx	xxxxx	xxxx	xxxx	xxxxx								
Volume/Cap:	xxxx	xxxx	xxxx	xxxx	xxxx	0.00	xxxx	xxxx	xxxx	xxxx	xxxx	xxxx								
Level Of Service Module:																				
Queue:	xxxxx	xxxx	xxxxx	xxxxx	xxxx	0.0	xxxxx	xxxx	xxxxx	xxxxx	xxxx	xxxxx								
Stopped Del:	xxxxx	xxxx	xxxxx	xxxxx	xxxx	9.2	xxxxx	xxxx	xxxxx	xxxxx	xxxx	xxxxx								
LOS by Move:	*	*	*	*	*	A	*	*	*	*	*	*								
Movement:	LT	-	LTR	-	RT	LT	-	LTR	-	RT	LT	-	LTR	-	RT	LT	-	LTR	-	RT
Shared Cap.:	xxxx	xxxx	xxxxx	xxxx	xxxx	xxxxx	xxxx	xxxx	xxxxx	xxxx	xxxx	xxxxx								
SharedQueue:	xxxxx	xxxx	xxxxx	xxxxx	xxxx	xxxxx	xxxxx	xxxx	xxxxx	xxxxx	xxxx	xxxxx								
Shrd StpDel:	xxxxx	xxxx	xxxxx	xxxxx	xxxx	xxxxx	xxxxx	xxxx	xxxxx	xxxxx	xxxx	xxxxx								
Shared LOS:	*	*	*	*	*	*	*	*	*	*	*	*								
ApproachDel:	xxxxxx					9.2	xxxxxx				xxxxxx									
ApproachLOS:	*					A	*				*									

Wilson Creek Estates
Traffic Impact Analysis

Level Of Service Computation Report
2000 HCM Unsignalized Method (Base Volume Alternative)

Intersection #8 Pendleton Rd & Date Ave

Average Delay (sec/veh): 4.9 Worst Case Level Of Service: A[8.4]

Approach:	North Bound					South Bound					East Bound					West Bound				
Movement:	L	-	T	-	R	L	-	T	-	R	L	-	T	-	R	L	-	T	-	R
Control:	Uncontrolled					Uncontrolled					Stop Sign					Stop Sign				
Rights:	Include					Include					Include					Include				
Lanes:	0	1	0	0	0	0	0	0	0	1	0	0	1!	0	0	0	0	1!	0	0
Volume Module:																				
Base Vol:	2	1	0	0	0	14	19	0	1	0	0	0								
Growth Adj:	1.00	1.00	1.00	1.00	1.00	1.00	1.00	1.00	1.00	1.00	1.00	1.00								
Initial Bse:	2	1	0	0	0	14	19	0	1	0	0	0								
User Adj:	1.00	1.00	1.00	1.00	1.00	1.00	1.00	1.00	1.00	1.00	1.00	1.00								
PHF Adj:	0.84	0.84	0.84	0.84	0.84	0.84	0.84	0.84	0.84	0.84	0.84	0.84								
PHF Volume:	2	1	0	0	0	17	23	0	1	0	0	0								
Reduct Vol:	0	0	0	0	0	0	0	0	0	0	0	0								
Final Vol.:	2	1	0	0	0	17	23	0	1	0	0	0								
Critical Gap Module:																				
Critical Gp:	4.1	xxxx	xxxxx	xxxxx	xxxx	xxxxx	6.4	xxxx	6.2	xxxxx	xxxx	xxxxx								
FollowUpTim:	2.2	xxxx	xxxxx	xxxxx	xxxx	xxxxx	3.5	xxxx	3.3	xxxxx	xxxx	xxxxx								
Capacity Module:																				
Cnflict Vol:	17	xxxx	xxxxx	xxxx	xxxx	xxxxx	6	xxxx	0	xxxx	xxxx	xxxxx								
Potent Cap.:	1614	xxxx	xxxxx	xxxx	xxxx	xxxxx	1021	xxxx	0	xxxx	xxxx	xxxxx								
Move Cap.:	1614	xxxx	xxxxx	xxxx	xxxx	xxxxx	1020	xxxx	0	xxxx	xxxx	xxxxx								
Volume/Cap:	0.00	xxxx	xxxx	xxxx	xxxx	xxxx	0.02	xxxx	0.00	xxxx	xxxx	xxxx								
Level Of Service Module:																				
Queue:	0.0	xxxx	xxxxx	xxxxx	xxxx	xxxxx	xxxxx	xxxx	xxxxx	xxxxx	xxxx	xxxxx								
Stopped Del:	7.2	xxxx	xxxxx	xxxxx	xxxx	xxxxx	xxxxx	xxxx	xxxxx	xxxxx	xxxx	xxxxx								
LOS by Move:	A	*	*	*	*	*	*	*	*	*	*	*								
Movement:	LT	-	LTR	-	RT	LT	-	LTR	-	RT	LT	-	LTR	-	RT	LT	-	LTR	-	RT
Shared Cap.:	xxxx	xxxx	xxxxx	xxxx	xxxx	xxxxx	xxxx	1073	xxxxx	xxxx	0	xxxxx								
SharedQueue:	0.0	xxxx	xxxxx	xxxxx	xxxx	xxxxx	xxxxx	0.1	xxxxx	xxxxx	xxxx	xxxxx								
Shrd StpDel:	7.2	xxxx	xxxxx	xxxxx	xxxx	xxxxx	xxxxx	8.4	xxxxx	xxxxx	xxxx	xxxxx								
Shared LOS:	A	*	*	*	*	*	*	A	*	*	*	*								
ApproachDel:	xxxxxx			xxxxxx				8.4			xxxxxx									
ApproachLOS:	*			*				A			*									

Wilson Creek Estates
Traffic Impact Analysis

Level Of Service Computation Report
2000 HCM Operations Method (Base Volume Alternative)

Intersection #1 Oak Glen Rd & Bryant St

Cycle (sec): 60 Critical Vol./Cap. (X): 0.460
Loss Time (sec): 4 (Y+R = 4 sec) Average Delay (sec/veh): 17.9
Optimal Cycle:OPTIMIZED Level Of Service: B

Approach:	North Bound			South Bound			East Bound			West Bound		
Movement:	L - T - R			L - T - R			L - T - R			L - T - R		
Control:	Protected			Protected			Protected			Protected		
Rights:	Include			Include			Include			Include		
Min. Green:	0	0	0	0	0	0	0	0	0	0	0	0
Lanes:	1 0 2 0 1			1 0 2 0 1			1 0 1 0 1			1 0 1 0 1		
Volume Module:												
Base Vol:	172	203	48	41	261	196	270	169	221	48	107	65
Growth Adj:	1.00	1.00	1.00	1.00	1.00	1.00	1.00	1.00	1.00	1.00	1.00	1.00
Initial Bse:	172	203	48	41	261	196	270	169	221	48	107	65
User Adj:	1.00	1.00	1.00	1.00	1.00	1.00	1.00	1.00	1.00	1.00	1.00	1.00
PHF Adj:	1.00	1.00	1.00	1.00	1.00	1.00	1.00	1.00	1.00	1.00	1.00	1.00
PHF Volume:	172	203	48	41	261	196	270	169	221	48	107	65
Reduct Vol:	0	0	0	0	0	0	0	0	0	0	0	0
Reduced Vol:	172	203	48	41	261	196	270	169	221	48	107	65
PCE Adj:	1.00	1.00	1.00	1.00	1.00	1.00	1.00	1.00	1.00	1.00	1.00	1.00
MLF Adj:	1.00	1.00	1.00	1.00	1.00	1.00	1.00	1.00	1.00	1.00	1.00	1.00
Final Vol.:	172	203	48	41	261	196	270	169	221	48	107	65
Saturation Flow Module:												
Sat/Lane:	1800	1800	1800	1800	1800	1800	1800	1800	1800	1800	1800	1800
Adjustment:	0.94	1.00	1.00	0.94	1.00	1.00	0.94	1.00	1.00	0.94	1.00	1.00
Lanes:	1.00	2.00	1.00	1.00	2.00	1.00	1.00	1.00	1.00	1.00	1.00	1.00
Final Sat.:	1692	3600	1800	1692	3600	1800	1692	1800	1800	1692	1800	1800
Capacity Analysis Module:												
Vol/Sat:	0.10	0.06	0.03	0.02	0.07	0.11	0.16	0.09	0.12	0.03	0.06	0.04
Crit Moves:	****					****	****				****	
Green/Cycle:	0.22	0.32	0.32	0.14	0.24	0.24	0.35	0.39	0.39	0.09	0.13	0.13
Volume/Cap:	0.46	0.18	0.08	0.18	0.31	0.46	0.46	0.24	0.32	0.32	0.46	0.28
Delay/Veh:	21.2	14.8	14.3	23.2	19.1	20.4	15.8	12.6	13.1	26.8	25.6	24.3
User DelAdj:	1.00	1.00	1.00	1.00	1.00	1.00	1.00	1.00	1.00	1.00	1.00	1.00
AdjDel/Veh:	21.2	14.8	14.3	23.2	19.1	20.4	15.8	12.6	13.1	26.8	25.6	24.3
HCM2kAvg:	3	1	1	1	2	4	4	2	3	1	2	1

Wilson Creek Estates
Traffic Impact Analysis

Level Of Service Computation Report
2000 HCM Operations Method (Base Volume Alternative)

Intersection #2 Bryant St & Fir Ave

Cycle (sec): 60 Critical Vol./Cap. (X): 0.153
Loss Time (sec): 4 (Y+R = 4 sec) Average Delay (sec/veh): 3.2
Optimal Cycle: 14 Level Of Service: A

Approach:	North Bound			South Bound			East Bound			West Bound		
Movement:	L - T - R			L - T - R			L - T - R			L - T - R		
Control:	Permitted			Permitted			Permitted			Permitted		
Rights:	Include			Include			Include			Include		
Min. Green:	0	0	0	0	0	0	0	0	0	0	0	0
Lanes:	1 0 2	0 1		1 0 1	1 0		0 0 1!	0 0		0 0 1!	0 0	
Volume Module:												
Base Vol:	30	359	33	3	411	16	10	4	29	20	1	3
Growth Adj:	1.00	1.00	1.00	1.00	1.00	1.00	1.00	1.00	1.00	1.00	1.00	1.00
Initial Bse:	30	359	33	3	411	16	10	4	29	20	1	3
User Adj:	1.00	1.00	1.00	1.00	1.00	1.00	1.00	1.00	1.00	1.00	1.00	1.00
PHF Adj:	1.00	1.00	1.00	1.00	1.00	1.00	1.00	1.00	1.00	1.00	1.00	1.00
PHF Volume:	30	359	33	3	411	16	10	4	29	20	1	3
Reduct Vol:	0	0	0	0	0	0	0	0	0	0	0	0
Reduced Vol:	30	359	33	3	411	16	10	4	29	20	1	3
PCE Adj:	1.00	1.00	1.00	1.00	1.00	1.00	1.00	1.00	1.00	1.00	1.00	1.00
MLF Adj:	1.00	1.00	1.00	1.00	1.00	1.00	1.00	1.00	1.00	1.00	1.00	1.00
Final Vol.:	30	359	33	3	411	16	10	4	29	20	1	3
Saturation Flow Module:												
Sat/Lane:	1800	1800	1800	1800	1800	1800	1800	1800	1800	1800	1800	1800
Adjustment:	0.94	1.00	1.00	0.94	1.00	1.00	0.94	1.00	1.00	0.94	1.00	1.00
Lanes:	1.00	2.00	1.00	1.00	1.93	0.07	0.24	0.09	0.67	0.84	0.04	0.12
Final Sat.:	1692	3600	1800	1692	3465	135	412	165	1196	1424	71	214
Capacity Analysis Module:												
Vol/Sat:	0.02	0.10	0.02	0.00	0.12	0.12	0.02	0.02	0.02	0.01	0.01	0.01
Crit Moves:					****			****				
Green/Cycle:	0.77	0.77	0.77	0.77	0.77	0.77	0.16	0.16	0.16	0.16	0.16	0.16
Volume/Cap:	0.02	0.13	0.02	0.00	0.15	0.15	0.15	0.15	0.15	0.09	0.09	0.09
Delay/Veh:	1.6	1.7	1.6	1.5	1.7	1.7	22.0	22.0	22.0	21.7	21.7	21.7
User DelAdj:	1.00	1.00	1.00	1.00	1.00	1.00	1.00	1.00	1.00	1.00	1.00	1.00
AdjDel/Veh:	1.6	1.7	1.6	1.5	1.7	1.7	22.0	22.0	22.0	21.7	21.7	21.7
HCM2kAvg:	0	1	0	0	1	1	1	1	1	0	0	0

Wilson Creek Estates
Traffic Impact Analysis

Level Of Service Computation Report
2000 HCM Unsignalized Method (Base Volume Alternative)

Intersection #3 Bryant St & Carter St

Average Delay (sec/veh): 1.5 Worst Case Level Of Service: C[16.5]

Approach:	North Bound				South Bound				East Bound				West Bound			
Movement:	L	- T	- R		L	- T	- R		L	- T	- R		L	- T	- R	
Control:	Uncontrolled				Uncontrolled				Stop Sign				Stop Sign			
Rights:	Include				Include				Include				Include			
Lanes:	1 0 0	1 0			1 0 0	1 0			0 0 1!	0 0			0 0 1!	0 0		
Volume Module:																
Base Vol:	18	266	35		25	367	4		3	0	12		34	0	7	
Growth Adj:	1.00	1.00	1.00		1.00	1.00	1.00		1.00	1.00	1.00		1.00	1.00	1.00	
Initial Bse:	18	266	35		25	367	4		3	0	12		34	0	7	
User Adj:	1.00	1.00	1.00		1.00	1.00	1.00		1.00	1.00	1.00		1.00	1.00	1.00	
PHF Adj:	1.00	1.00	1.00		1.00	1.00	1.00		1.00	1.00	1.00		1.00	1.00	1.00	
PHF Volume:	18	266	35		25	367	4		3	0	12		34	0	7	
Reduct Vol:	0	0	0		0	0	0		0	0	0		0	0	0	
Final Vol.:	18	266	35		25	367	4		3	0	12		34	0	7	
Critical Gap Module:																
Critical Gp:	4.1	xxxx	xxxxx		4.1	xxxx	xxxxx		7.1	xxxx	6.2		7.1	xxxx	6.2	
FollowUpTim:	2.2	xxxx	xxxxx		2.2	xxxx	xxxxx		3.5	xxxx	3.3		3.5	xxxx	3.3	
Capacity Module:																
Cnflict Vol:	371	xxxx	xxxxx		301	xxxx	xxxxx		742	xxxx	369		745	xxxx	284	
Potent Cap.:	1199	xxxx	xxxxx		1272	xxxx	xxxxx		334	xxxx	681		333	xxxx	760	
Move Cap.:	1199	xxxx	xxxxx		1272	xxxx	xxxxx		322	xxxx	681		318	xxxx	760	
Volume/Cap:	0.02	xxxx	xxxx		0.02	xxxx	xxxx		0.01	xxxx	0.02		0.11	xxxx	0.01	
Level Of Service Module:																
Queue:	0.0	xxxx	xxxxx		0.1	xxxx	xxxxx	xxxxx	xxxx	xxxxx	xxxxx		xxxx	xxxxx		
Stopped Del:	8.0	xxxx	xxxxx		7.9	xxxx	xxxxx	xxxxx	xxxx	xxxxx	xxxxx		xxxx	xxxxx		
LOS by Move:	A	*	*		A	*	*	*	*	*	*		*	*		
Movement:	LT -	LTR -	RT		LT -	LTR -	RT		LT -	LTR -	RT		LT -	LTR -	RT	
Shared Cap.:	xxxx	xxxx	xxxxx		xxxx	xxxx	xxxxx		xxxx	557	xxxxx		xxxx	354	xxxxx	
SharedQueue:	xxxxx	xxxx	xxxxx		xxxxx	xxxx	xxxxx		xxxxx	0.1	xxxxx		xxxxx	0.4	xxxxx	
Shrd StpDel:	xxxxx	xxxx	xxxxx		xxxxx	xxxx	xxxxx		xxxxx	11.6	xxxxx		xxxxx	16.5	xxxxx	
Shared LOS:	*	*	*		*	*	*		*	B	*		*	C	*	
ApproachDel:	xxxxxx				xxxxxx				11.6				16.5			
ApproachLOS:	*				*				B				C			

Wilson Creek Estates
Traffic Impact Analysis

Level Of Service Computation Report
2000 HCM Unsignalized Method (Base Volume Alternative)

Intersection #4 Carter St & Jefferson St

Average Delay (sec/veh): 1.4 Worst Case Level Of Service: A[8.7]

Approach:	North Bound					South Bound					East Bound					West Bound				
Movement:	L	-	T	-	R	L	-	T	-	R	L	-	T	-	R	L	-	T	-	R
Control:	Stop Sign					Stop Sign					Uncontrolled					Uncontrolled				
Rights:	Include					Include					Include					Include				
Lanes:	1	0	0	0	0	0	0	0	1	0	0	0	1!	0	0	0	0	1	0	0
Volume Module:																				
Base Vol:	2	0	0	0		1	1		1		1	14		2		0	9		0	
Growth Adj:	1.00	1.00	1.00	1.00		1.00	1.00		1.00		1.00	1.00		1.00		1.00	1.00		1.00	
Initial Bse:	2	0	0	0		1	1		1		1	14		2		0	9		0	
User Adj:	1.00	1.00	1.00	1.00		1.00	1.00		1.00		1.00	1.00		1.00		1.00	1.00		1.00	
PHF Adj:	1.00	1.00	1.00	1.00		1.00	1.00		1.00		1.00	1.00		1.00		1.00	1.00		1.00	
PHF Volume:	2	0	0	0		1	1		1		1	14		2		0	9		0	
Reduct Vol:	0	0	0	0		0	0		0		0	0		0		0	0		0	
Final Vol.:	2	0	0	0		1	1		1		1	14		2		0	9		0	
Critical Gap Module:																				
Critical Gp:	7.1	xxxx	xxxxx	xxxxx		6.5	6.2		4.1		xxxx	xxxxx		xxxxx		xxxx	xxxxx			
FollowUpTim:	3.5	xxxx	xxxxx	xxxxx		4.0	3.3		2.2		xxxx	xxxxx		xxxxx		xxxx	xxxxx			
Capacity Module:																				
Cnflict Vol:	27	xxxx	xxxxx	xxxx		27	9		9		xxxx	xxxxx		xxxx		xxxx	xxxxx			
Potent Cap.:	988	xxxx	xxxxx	xxxx		870	1079		1624		xxxx	xxxxx		xxxx		xxxx	xxxxx			
Move Cap.:	986	xxxx	xxxxx	xxxx		870	1079		1624		xxxx	xxxxx		xxxx		xxxx	xxxxx			
Volume/Cap:	0.00	xxxx	xxxx	xxxx		0.00	0.00		0.00		xxxx	xxxx		xxxx		xxxx	xxxx			
Level Of Service Module:																				
Queue:	0.0	xxxx	xxxxx	xxxxx	xxxx	xxxxx		0.0	xxxx	xxxxx	xxxxx	xxxx	xxxxx							
Stopped Del:	8.7	xxxx	xxxxx	xxxxx	xxxx	xxxxx		7.2	xxxx	xxxxx	xxxxx	xxxx	xxxxx							
LOS by Move:	A	*	*	*	*	*		A	*	*	*	*	*							
Movement:	LT	-	LTR	-	RT	LT	-	LTR	-	RT	LT	-	LTR	-	RT	LT	-	LTR	-	RT
Shared Cap.:	xxxx	xxxx	xxxxx	xxxx	xxxx	963	xxxx	xxxx	xxxxx	xxxx	xxxx	xxxxx								
SharedQueue:	xxxxx	xxxx	xxxxx	xxxxx	xxxx	0.0	xxxxx	xxxx	xxxxx	xxxxx	xxxx	xxxxx								
Shrd StpDel:	xxxxx	xxxx	xxxxx	xxxxx	xxxx	8.7	xxxxx	xxxx	xxxxx	xxxxx	xxxx	xxxxx								
Shared LOS:	*	*	*	*	*	A	*	*	*	*	*	*								
ApproachDel:	8.7					8.7			xxxxxx			xxxxxx								
ApproachLOS:	A					A			*			*								

Wilson Creek Estates
Traffic Impact Analysis

Level Of Service Computation Report
2000 HCM Unsignalized Method (Base Volume Alternative)

Intersection #5 Oak Glen Rd & Pendleton Rd

Average Delay (sec/veh): 0.5 Worst Case Level Of Service: A[9.5]

Approach:	North Bound			South Bound			East Bound			West Bound		
Movement:	L - T - R			L - T - R			L - T - R			L - T - R		
Control:	Stop Sign			Stop Sign			Uncontrolled			Uncontrolled		
Rights:	Include			Include			Include			Include		
Lanes:	0 0 1! 0 0			0 0 1! 0 0			0 0 0 1 0			0 1 0 0 0		
Volume Module:												
Base Vol:	9	0	3	0	0	0	0	106	23	1	87	0
Growth Adj:	1.00	1.00	1.00	1.00	1.00	1.00	1.00	1.00	1.00	1.00	1.00	1.00
Initial Bse:	9	0	3	0	0	0	0	106	23	1	87	0
User Adj:	1.00	1.00	1.00	1.00	1.00	1.00	1.00	1.00	1.00	1.00	1.00	1.00
PHF Adj:	1.00	1.00	1.00	1.00	1.00	1.00	1.00	1.00	1.00	1.00	1.00	1.00
PHF Volume:	9	0	3	0	0	0	0	106	23	1	87	0
Reduct Vol:	0	0	0	0	0	0	0	0	0	0	0	0
Final Vol.:	9	0	3	0	0	0	0	106	23	1	87	0
Critical Gap Module:												
Critical Gp:	6.4	xxxx	6.2	xxxxx	xxxx	xxxxx	xxxxx	xxxx	xxxxx	4.1	xxxx	xxxxx
FollowUpTim:	3.5	xxxx	3.3	xxxxx	xxxx	xxxxx	xxxxx	xxxx	xxxxx	2.2	xxxx	xxxxx
Capacity Module:												
Cnflict Vol:	207	xxxx	118	xxxx	xxxx	xxxxx	xxxx	xxxx	xxxxx	129	xxxx	xxxxx
Potent Cap.:	786	xxxx	940	xxxx	xxxx	xxxxx	xxxx	xxxx	xxxxx	1469	xxxx	xxxxx
Move Cap.:	786	xxxx	940	xxxx	xxxx	xxxxx	xxxx	xxxx	xxxxx	1469	xxxx	xxxxx
Volume/Cap:	0.01	xxxx	0.00	xxxx	xxxx	xxxx	xxxx	xxxx	xxxx	0.00	xxxx	xxxx
Level Of Service Module:												
Queue:	xxxxx	xxxx	xxxxx	xxxxx	xxxx	xxxxx	xxxxx	xxxx	xxxxx	0.0	xxxx	xxxxx
Stopped Del:	xxxxx	xxxx	xxxxx	xxxxx	xxxx	xxxxx	xxxxx	xxxx	xxxxx	7.5	xxxx	xxxxx
LOS by Move:	*	*	*	*	*	*	*	*	*	A	*	*
Movement:	LT - LTR - RT			LT - LTR - RT			LT - LTR - RT			LT - LTR - RT		
Shared Cap.:	xxxx	820	xxxxx	xxxx	0	xxxxx	xxxx	xxxx	xxxxx	xxxx	xxxx	xxxxx
SharedQueue:	xxxxx	0.0	xxxxx	xxxxx	xxxx	xxxxx	xxxxx	xxxx	xxxxx	0.0	xxxx	xxxxx
Shrd StpDel:	xxxxx	9.5	xxxxx	xxxxx	xxxx	xxxxx	xxxxx	xxxx	xxxxx	7.5	xxxx	xxxxx
Shared LOS:	*	A	*	*	*	*	*	*	*	A	*	*
ApproachDel:		9.5		xxxxxx			xxxxxx			xxxxxx		
ApproachLOS:		A			*			*			*	

Wilson Creek Estates
Traffic Impact Analysis

Level Of Service Computation Report
2000 HCM Unsignalized Method (Base Volume Alternative)

Intersection #6 Oak Glen Rd & Casa Blance Rd

Average Delay (sec/veh): 1.0 Worst Case Level Of Service: A[9.4]

Approach:	North Bound					South Bound					East Bound					West Bound				
Movement:	L	-	T	-	R	L	-	T	-	R	L	-	T	-	R	L	-	T	-	R
Control:	Stop Sign					Stop Sign					Uncontrolled					Uncontrolled				
Rights:	Include					Include					Include					Include				
Lanes:	1	0	0	0	0	0	0	1!	0	0	0	0	0	1	0	0	1	0	0	0
Volume Module:																				
Base Vol:	20	0	0	0	0	0	0	0	0	0	0	70	42	1	69	0				
Growth Adj:	1.00	1.00	1.00	1.00	1.00	1.00	1.00	1.00	1.00	1.00	1.00	1.00	1.00	1.00	1.00	1.00				
Initial Bse:	20	0	0	0	0	0	0	0	0	0	0	70	42	1	69	0				
User Adj:	1.00	1.00	1.00	1.00	1.00	1.00	1.00	1.00	1.00	1.00	1.00	1.00	1.00	1.00	1.00	1.00				
PHF Adj:	1.00	1.00	1.00	1.00	1.00	1.00	1.00	1.00	1.00	1.00	1.00	1.00	1.00	1.00	1.00	1.00				
PHF Volume:	20	0	0	0	0	0	0	0	0	0	0	70	42	1	69	0				
Reduct Vol:	0	0	0	0	0	0	0	0	0	0	0	0	0	0	0	0				
Final Vol.:	20	0	0	0	0	0	0	0	0	0	0	70	42	1	69	0				
Critical Gap Module:																				
Critical Gp:	6.4	xxxx	xxxxx	xxxxx	xxxx	xxxxx	xxxxx	xxxx	xxxxx		4.1	xxxx	xxxxx							
FollowUpTim:	3.5	xxxx	xxxxx	xxxxx	xxxx	xxxxx	xxxxx	xxxx	xxxxx		2.2	xxxx	xxxxx							
Capacity Module:																				
Cnflict Vol:	162	xxxx	xxxxx	xxxx	xxxx	xxxxx	xxxx	xxxx	xxxxx		112	xxxx	xxxxx							
Potent Cap.:	834	xxxx	xxxxx	xxxx	xxxx	xxxxx	xxxx	xxxx	xxxxx		1490	xxxx	xxxxx							
Move Cap.:	833	xxxx	xxxxx	xxxx	xxxx	xxxxx	xxxx	xxxx	xxxxx		1490	xxxx	xxxxx							
Volume/Cap:	0.02	xxxx	xxxx	xxxx	xxxx	xxxx	xxxx	xxxx	xxxx		0.00	xxxx	xxxx							
Level Of Service Module:																				
Queue:	0.1	xxxx	xxxxx	xxxxx	xxxx	xxxxx	xxxxx	xxxx	xxxxx		0.0	xxxx	xxxxx							
Stopped Del:	9.4	xxxx	xxxxx	xxxxx	xxxx	xxxxx	xxxxx	xxxx	xxxxx		7.4	xxxx	xxxxx							
LOS by Move:	A	*	*	*	*	*	*	*	*		A	*	*							
Movement:	LT	-	LTR	-	RT	LT	-	LTR	-	RT	LT	-	LTR	-	RT	LT	-	LTR	-	RT
Shared Cap.:	xxxx	xxxx	xxxxx	xxxx	0	xxxxx	xxxx	xxxx	xxxxx		xxxx	xxxx	xxxxx							
SharedQueue:	xxxxx	xxxx	xxxxx	xxxxx	xxxx	xxxxx	xxxxx	xxxx	xxxxx		0.0	xxxx	xxxxx							
Shrd StpDel:	xxxxx	xxxx	xxxxx	xxxxx	xxxx	xxxxx	xxxxx	xxxx	xxxxx		7.4	xxxx	xxxxx							
Shared LOS:	*	*	*	*	*	*	*	*	*		A	*	*							
ApproachDel:	9.4			xxxxxx			xxxxxx				xxxxxx									
ApproachLOS:	A			*			*				*									

Wilson Creek Estates
Traffic Impact Analysis

Level Of Service Computation Report
2000 HCM Unsignalized Method (Base Volume Alternative)

Intersection #7 Oak Glen Rd & Cherry Croft Rd

Average Delay (sec/veh): 0.1 Worst Case Level Of Service: A[9.8]

Approach:	North Bound					South Bound					East Bound					West Bound				
Movement:	L	-	T	-	R	L	-	T	-	R	L	-	T	-	R	L	-	T	-	R
Control:	Stop Sign					Stop Sign					Uncontrolled					Uncontrolled				
Rights:	Include					Include					Include					Include				
Lanes:	0	0	0	0	0	1	0	0	0	0	1	0	1	0	0	0	0	1	0	0
Volume Module:																				
Base Vol:	0	0	0			1	0	0			2	137	0			0	96	0		
Growth Adj:	1.00	1.00	1.00			1.00	1.00	1.00			1.00	1.00	1.00			1.00	1.00	1.00		
Initial Bse:	0	0	0			1	0	0			2	137	0			0	96	0		
User Adj:	1.00	1.00	1.00			1.00	1.00	1.00			1.00	1.00	1.00			1.00	1.00	1.00		
PHF Adj:	1.00	1.00	1.00			1.00	1.00	1.00			1.00	1.00	1.00			1.00	1.00	1.00		
PHF Volume:	0	0	0			1	0	0			2	137	0			0	96	0		
Reduct Vol:	0	0	0			0	0	0			0	0	0			0	0	0		
Final Vol.:	0	0	0			1	0	0			2	137	0			0	96	0		
Critical Gap Module:																				
Critical Gp:	xxxxx	xxxx	xxxxx			6.4	xxxx	xxxxx			4.1	xxxx	xxxxx			xxxxx	xxxx	xxxxx		
FollowUpTim:	xxxxx	xxxx	xxxxx			3.5	xxxx	xxxxx			2.2	xxxx	xxxxx			xxxxx	xxxx	xxxxx		
Capacity Module:																				
Cnflict Vol:	xxxx	xxxx	xxxxx			237	xxxx	xxxxx			96	xxxx	xxxxx			xxxx	xxxx	xxxxx		
Potent Cap.:	xxxx	xxxx	xxxxx			756	xxxx	xxxxx			1510	xxxx	xxxxx			xxxx	xxxx	xxxxx		
Move Cap.:	xxxx	xxxx	xxxxx			755	xxxx	xxxxx			1510	xxxx	xxxxx			xxxx	xxxx	xxxxx		
Volume/Cap:	xxxx	xxxx	xxxx			0.00	xxxx	xxxx			0.00	xxxx	xxxx			xxxx	xxxx	xxxx		
Level Of Service Module:																				
Queue:	xxxxx	xxxx	xxxxx			0.0	xxxx	xxxxx			0.0	xxxx	xxxxx			xxxxx	xxxx	xxxxx		
Stopped Del:	xxxxx	xxxx	xxxxx			9.8	xxxx	xxxxx			7.4	xxxx	xxxxx			xxxxx	xxxx	xxxxx		
LOS by Move:	*	*	*			A	*	*			A	*	*			*	*	*		
Movement:	LT	-	LTR	-	RT	LT	-	LTR	-	RT	LT	-	LTR	-	RT	LT	-	LTR	-	RT
Shared Cap.:	xxxx	xxxx	xxxxx			xxxx	xxxx	xxxxx			xxxx	xxxx	xxxxx			xxxx	xxxx	xxxxx		
SharedQueue:	xxxxx	xxxx	xxxxx			xxxxx	xxxx	xxxxx			xxxxx	xxxx	xxxxx			xxxxx	xxxx	xxxxx		
Shrd StpDel:	xxxxx	xxxx	xxxxx			xxxxx	xxxx	xxxxx			xxxxx	xxxx	xxxxx			xxxxx	xxxx	xxxxx		
Shared LOS:	*	*	*			*	*	*			*	*	*			*	*	*		
ApproachDel:	xxxxxx					9.8					xxxxxx					xxxxxx				
ApproachLOS:	*					A					*					*				

Wilson Creek Estates
Traffic Impact Analysis

Level Of Service Computation Report
2000 HCM Unsignalized Method (Base Volume Alternative)

Intersection #8 Pendleton Rd & Date Ave

Average Delay (sec/veh): 5.2 Worst Case Level Of Service: A[9.2]

Approach:	North Bound					South Bound					East Bound					West Bound				
Movement:	L	-	T	-	R	L	-	T	-	R	L	-	T	-	R	L	-	T	-	R
Control:	Uncontrolled					Uncontrolled					Stop Sign					Stop Sign				
Rights:	Include					Include					Include					Include				
Lanes:	0	1	0	0	0	0	0	0	1	0	0	0	1!	0	0	0	0	1	0	0
Volume Module:																				
Base Vol:	4	4	0	0		1	19				27	0			4	0		2	0	
Growth Adj:	1.00	1.00	1.00	1.00		1.00	1.00				1.00	1.00			1.00	1.00		1.00	1.00	
Initial Bse:	4	4	0	0		1	19				27	0			4	0		2	0	
User Adj:	1.00	1.00	1.00	1.00		1.00	1.00				1.00	1.00			1.00	1.00		1.00	1.00	
PHF Adj:	1.00	1.00	1.00	1.00		1.00	1.00				1.00	1.00			1.00	1.00		1.00	1.00	
PHF Volume:	4	4	0	0		1	19				27	0			4	0		2	0	
Reduct Vol:	0	0	0	0		0	0				0	0			0	0		0	0	
Final Vol.:	4	4	0	0		1	19				27	0			4	0		2	0	
Critical Gap Module:																				
Critical Gp:	4.1	xxxx	xxxxx	xxxxx	xxxx	xxxxx					7.1	xxxx			6.2	xxxxx		6.5	xxxxx	
FollowUpTim:	2.2	xxxx	xxxxx	xxxxx	xxxx	xxxxx					3.5	xxxx			3.3	xxxxx		4.0	xxxxx	
Capacity Module:																				
Cnflict Vol:	20	xxxx	xxxxx	xxxx	xxxx	xxxxx					24	xxxx			11	xxxx		32	xxxxx	
Potent Cap.:	1609	xxxx	xxxxx	xxxx	xxxx	xxxxx					993	xxxx			1077	xxxx		865	xxxxx	
Move Cap.:	1609	xxxx	xxxxx	xxxx	xxxx	xxxxx					990	xxxx			1077	xxxx		863	xxxxx	
Volume/Cap:	0.00	xxxx	xxxx	xxxx	xxxx	xxxx					0.03	xxxx			0.00	xxxx		0.00	xxxx	
Level Of Service Module:																				
Queue:	0.0	xxxx	xxxxx	xxxxx	xxxx	xxxxx	xxxxx	xxxx	xxxxx	xxxxx								0.0	xxxxx	
Stopped Del:	7.2	xxxx	xxxxx	xxxxx	xxxx	xxxxx	xxxxx	xxxx	xxxxx	xxxxx								9.2	xxxxx	
LOS by Move:	A	*	*	*	*	*	*	*	*	*								A	*	
Movement:	LT	-	LTR	-	RT	LT	-	LTR	-	RT	LT	-	LTR	-	RT	LT	-	LTR	-	RT
Shared Cap.:	xxxx	xxxx	xxxxx	xxxx	xxxx	xxxxx	xxxx	1000	xxxxx	xxxx	xxxx	xxxxx								
SharedQueue:	0.0	xxxx	xxxxx	xxxxx	xxxx	xxxxx	xxxxx	0.1	xxxxx	xxxxx	xxxx	xxxxx								
Shrd StpDel:	7.2	xxxx	xxxxx	xxxxx	xxxx	xxxxx	xxxxx	8.7	xxxxx	xxxxx	xxxx	xxxxx								
Shared LOS:	A	*	*	*	*	*	*	A	*	*	*	*								
ApproachDel:	xxxxxx			xxxxxx				8.7			9.2									
ApproachLOS:	*			*				A			A									

APPENDIX C

INTERSECTION ANALYSIS WORKSHEETS

EXISTING PLUS PROJECT CONDITIONS

Wilson Creek Estates
Traffic Impact Analysis

Level Of Service Computation Report
2000 HCM Operations Method (Future Volume Alternative)

Intersection #1 Oak Glen Rd & Bryant St

Cycle (sec): 60 Critical Vol./Cap. (X): 0.927
Loss Time (sec): 4 (Y+R = 4 sec) Average Delay (sec/veh): 32.4
Optimal Cycle: 86 Level Of Service: C

Approach:	North Bound			South Bound			East Bound			West Bound		
Movement:	L - T - R			L - T - R			L - T - R			L - T - R		
Control:	Protected			Protected			Protected			Protected		
Rights:	Include			Include			Include			Include		
Min. Green:	0	0	0	0	0	0	0	0	0	0	0	0
Lanes:	1 0 2 0 1			1 0 2 0 1			1 0 1 0 1			1 0 1 0 1		
Volume Module:												
Base Vol:	313	358	53	31	353	439	200	95	264	45	213	50
Growth Adj:	1.00	1.00	1.00	1.00	1.00	1.00	1.00	1.00	1.00	1.00	1.00	1.00
Initial Bse:	313	358	53	31	353	439	200	95	264	45	213	50
Added Vol:	0	1	15	0	4	5	2	14	0	45	41	0
PasserByVol:	0	0	0	0	0	0	0	0	0	0	0	0
Initial Fut:	313	359	68	31	357	444	202	109	264	90	254	50
User Adj:	1.00	1.00	1.00	1.00	1.00	1.00	1.00	1.00	1.00	1.00	1.00	1.00
PHF Adj:	0.80	0.80	0.80	0.80	0.80	0.80	0.80	0.80	0.80	0.80	0.80	0.80
PHF Volume:	391	449	85	39	446	555	253	136	330	113	318	63
Reduct Vol:	0	0	0	0	0	0	0	0	0	0	0	0
Reduced Vol:	391	449	85	39	446	555	253	136	330	113	318	63
PCE Adj:	1.00	1.00	1.00	1.00	1.00	1.00	1.00	1.00	1.00	1.00	1.00	1.00
MLF Adj:	1.00	1.00	1.00	1.00	1.00	1.00	1.00	1.00	1.00	1.00	1.00	1.00
Final Vol.:	391	449	85	39	446	555	253	136	330	113	318	63
Saturation Flow Module:												
Sat/Lane:	1800	1800	1800	1800	1800	1800	1800	1800	1800	1800	1800	1800
Adjustment:	0.94	1.00	1.00	0.94	1.00	1.00	0.94	1.00	1.00	0.94	1.00	1.00
Lanes:	1.00	2.00	1.00	1.00	2.00	1.00	1.00	1.00	1.00	1.00	1.00	1.00
Final Sat.:	1692	3600	1800	1692	3600	1800	1692	1800	1800	1692	1800	1800
Capacity Analysis Module:												
Vol/Sat:	0.23	0.12	0.05	0.02	0.12	0.31	0.15	0.08	0.18	0.07	0.18	0.03
Crit Moves:	****					****	****				****	
Green/Cycle:	0.25	0.49	0.49	0.09	0.33	0.33	0.16	0.26	0.26	0.09	0.19	0.19
Volume/Cap:	0.93	0.25	0.10	0.25	0.37	0.93	0.93	0.29	0.71	0.71	0.93	0.18
Delay/Veh:	48.5	8.9	8.2	26.3	15.4	40.0	60.4	18.2	25.3	40.5	54.4	20.6
User DelAdj:	1.00	1.00	1.00	1.00	1.00	1.00	1.00	1.00	1.00	1.00	1.00	1.00
AdjDel/Veh:	48.5	8.9	8.2	26.3	15.4	40.0	60.4	18.2	25.3	40.5	54.4	20.6
HCM2kAvg:	12	3	1	1	3	15	9	2	7	4	10	1

Wilson Creek Estates
Traffic Impact Analysis

Level Of Service Computation Report
2000 HCM Operations Method (Future Volume Alternative)

Intersection #2 Bryant St & Fir Ave

Cycle (sec): 60 Critical Vol./Cap. (X): 0.486
Loss Time (sec): 4 (Y+R = 4 sec) Average Delay (sec/veh): 12.0
Optimal Cycle: 21 Level Of Service: B

Approach:	North Bound			South Bound			East Bound			West Bound		
Movement:	L - T - R			L - T - R			L - T - R			L - T - R		
Control:	Permitted			Permitted			Permitted			Permitted		
Rights:	Include			Include			Include			Include		
Min. Green:	0	0	0	0	0	0	0	0	0	0	0	0
Lanes:	1 0 2	0 1		1 0 1	1 0		0 0 1!	0 0		0 0 1!	0 0	
Volume Module:												
Base Vol:	241	322	11	4	385	17	60	15	294	35	16	8
Growth Adj:	1.00	1.00	1.00	1.00	1.00	1.00	1.00	1.00	1.00	1.00	1.00	1.00
Initial Bse:	241	322	11	4	385	17	60	15	294	35	16	8
Added Vol:	0	0	3	0	0	0	0	0	0	9	0	0
PasserByVol:	0	0	0	0	0	0	0	0	0	0	0	0
Initial Fut:	241	322	14	4	385	17	60	15	294	44	16	8
User Adj:	1.00	1.00	1.00	1.00	1.00	1.00	1.00	1.00	1.00	1.00	1.00	1.00
PHF Adj:	0.77	0.77	0.77	0.77	0.77	0.77	0.77	0.77	0.77	0.77	0.77	0.77
PHF Volume:	313	418	18	5	500	22	78	19	382	57	21	10
Reduct Vol:	0	0	0	0	0	0	0	0	0	0	0	0
Reduced Vol:	313	418	18	5	500	22	78	19	382	57	21	10
PCE Adj:	1.00	1.00	1.00	1.00	1.00	1.00	1.00	1.00	1.00	1.00	1.00	1.00
MLF Adj:	1.00	1.00	1.00	1.00	1.00	1.00	1.00	1.00	1.00	1.00	1.00	1.00
Final Vol.:	313	418	18	5	500	22	78	19	382	57	21	10
Saturation Flow Module:												
Sat/Lane:	1800	1800	1800	1800	1800	1800	1800	1800	1800	1800	1800	1800
Adjustment:	0.94	1.00	1.00	0.94	1.00	1.00	0.94	1.00	1.00	0.94	1.00	1.00
Lanes:	1.00	2.00	1.00	1.00	1.92	0.08	0.17	0.04	0.79	0.66	0.23	0.11
Final Sat.:	1692	3600	1800	1692	3448	152	290	72	1419	1119	407	203
Capacity Analysis Module:												
Vol/Sat:	0.18	0.12	0.01	0.00	0.15	0.15	0.27	0.27	0.27	0.05	0.05	0.05
Crit Moves:	****							****				
Green/Cycle:	0.38	0.38	0.38	0.38	0.38	0.38	0.55	0.55	0.55	0.55	0.55	0.55
Volume/Cap:	0.49	0.31	0.03	0.01	0.38	0.38	0.49	0.49	0.49	0.09	0.09	0.09
Delay/Veh:	14.7	13.2	11.7	11.6	13.7	13.7	8.6	8.6	8.6	6.4	6.4	6.4
User DelAdj:	1.00	1.00	1.00	1.00	1.00	1.00	1.00	1.00	1.00	1.00	1.00	1.00
AdjDel/Veh:	14.7	13.2	11.7	11.6	13.7	13.7	8.6	8.6	8.6	6.4	6.4	6.4
HCM2kAvg:	5	3	0	0	4	4	6	6	6	1	1	1

Wilson Creek Estates
Traffic Impact Analysis

Level Of Service Computation Report
2000 HCM Unsignalized Method (Future Volume Alternative)

Intersection #3 Bryant St & Carter St

Average Delay (sec/veh): 2.3 Worst Case Level Of Service: C[19.0]

Approach:	North Bound						South Bound						East Bound						West Bound					
Movement:	L	-	T	-	R		L	-	T	-	R		L	-	T	-	R		L	-	T	-	R	
Control:	Uncontrolled						Uncontrolled						Stop Sign						Stop Sign					
Rights:	Include						Include						Include						Include					
Lanes:	1	0	0	1	0		1	0	0	1	0		0	0	1!	0	0		0	0	1!	0	0	
Volume Module:																								
Base Vol:	5	404		30			2	297		2			8		0		16		51		0		33	
Growth Adj:	1.00	1.00		1.00			1.00	1.00		1.00			1.00		1.00		1.00		1.00		1.00		1.00	
Initial Bse:	5	404		30			2	297		2			8		0		16		51		0		33	
Added Vol:	0	0		0			0	0		0			0		0		0		0		0		0	
PasserByVol:	0	0		0			0	0		0			0		0		0		0		0		0	
Initial Fut:	5	404		30			2	297		2			8		0		16		51		0		33	
User Adj:	1.00	1.00		1.00			1.00	1.00		1.00			1.00		1.00		1.00		1.00		1.00		1.00	
PHF Adj:	0.88	0.88		0.88			0.88	0.88		0.88			0.88		0.88		0.88		0.88		0.88		0.88	
PHF Volume:	6	459		34			2	338		2			9		0		18		58		0		38	
Reduct Vol:	0	0		0			0	0		0			0		0		0		0		0		0	
Final Vol.:	6	459		34			2	338		2			9		0		18		58		0		38	
Critical Gap Module:																								
Critical Gp:	4.1	xxxx		xxxxx			4.1	xxxx		xxxxx			7.1	xxxx			6.2		7.1	xxxx			6.2	
FollowUpTim:	2.2	xxxx		xxxxx			2.2	xxxx		xxxxx			3.5	xxxx			3.3		3.5	xxxx			3.3	
Capacity Module:																								
Cnflict Vol:	340	xxxx		xxxxx			493	xxxx		xxxxx			849	xxxx			339		840	xxxx			476	
Potent Cap.:	1231	xxxx		xxxxx			1081	xxxx		xxxxx			283	xxxx			708		287	xxxx			593	
Move Cap.:	1231	xxxx		xxxxx			1081	xxxx		xxxxx			264	xxxx			708		278	xxxx			593	
Volume/Cap:	0.00	xxxx		xxxx			0.00	xxxx		xxxx			0.03	xxxx			0.03		0.21	xxxx			0.06	
Level Of Service Module:																								
Queue:	0.0	xxxx		xxxxx			0.0	xxxx		xxxxx			xxxxx	xxxx			xxxxx		xxxxx	xxxx			xxxxx	
Stopped Del:	7.9	xxxx		xxxxx			8.3	xxxx		xxxxx			xxxxx	xxxx			xxxxx		xxxxx	xxxx			xxxxx	
LOS by Move:	A	*		*			A	*		*			*	*			*		*	*			*	
Movement:	LT	-	LTR	-	RT		LT	-	LTR	-	RT		LT	-	LTR	-	RT		LT	-	LTR	-	RT	
Shared Cap.:	xxxx	xxxx		xxxxx			xxxx	xxxx		xxxxx			xxxx		453		xxxxx		xxxx		352		xxxxx	
SharedQueue:	xxxxx	xxxx		xxxxx			xxxxx	xxxx		xxxxx			xxxxx		0.2		xxxxx		xxxxx		1.1		xxxxx	
Shrd StpDel:	xxxxx	xxxx		xxxxx			xxxxx	xxxx		xxxxx			xxxxx		13.4		xxxxx		xxxxx		19.0		xxxxx	
Shared LOS:	*	*		*			*	*		*			*		B		*		*		C		*	
ApproachDel:	xxxxxx						xxxxxx								13.4						19.0			
ApproachLOS:	*						*								B						C			

Wilson Creek Estates
Traffic Impact Analysis

Level Of Service Computation Report
2000 HCM Unsignalized Method (Future Volume Alternative)

Intersection #4 Carter St & Jefferson St

Average Delay (sec/veh): 3.4 Worst Case Level Of Service: A[9.2]

Approach:	North Bound					South Bound					East Bound					West Bound				
Movement:	L	-	T	-	R	L	-	T	-	R	L	-	T	-	R	L	-	T	-	R
Control:	Stop Sign					Stop Sign					Uncontrolled					Uncontrolled				
Rights:	Include					Include					Include					Include				
Lanes:	0	0	1	0	0	0	1	0	0	0	0	1	0	0	0	0	0	1	0	0
Volume Module:																				
Base Vol:	0	1	0	2	0	0	1	8	0	0	10	0								
Growth Adj:	1.00	1.00	1.00	1.00	1.00	1.00	1.00	1.00	1.00	1.00	1.00	1.00								
Initial Bse:	0	1	0	2	0	0	1	8	0	0	10	0								
Added Vol:	0	5	0	0	2	0	0	0	0	0	0	0								
PasserByVol:	0	0	0	0	0	0	0	0	0	0	0	0								
Initial Fut:	0	6	0	2	2	0	1	8	0	0	10	0								
User Adj:	1.00	1.00	1.00	1.00	1.00	1.00	1.00	1.00	1.00	1.00	1.00	1.00								
PHF Adj:	0.69	0.69	0.69	0.69	0.69	0.69	0.69	0.69	0.69	0.69	0.69	0.69								
PHF Volume:	0	9	0	3	3	0	1	12	0	0	14	0								
Reduct Vol:	0	0	0	0	0	0	0	0	0	0	0	0								
Final Vol.:	0	9	0	3	3	0	1	12	0	0	14	0								
Critical Gap Module:																				
Critical Gp:	xxxxx	6.5	xxxxx	7.1	6.5	xxxxx	4.1	xxxx	xxxxx	xxxxx	xxxx	xxxxx								
FollowUpTim:	xxxxx	4.0	xxxxx	3.5	4.0	xxxxx	2.2	xxxx	xxxxx	xxxxx	xxxx	xxxxx								
Capacity Module:																				
Cnflict Vol:	xxxx	29	xxxxx	33	29	xxxxx	14	xxxx	xxxxx	xxxx	xxxx	xxxxx								
Potent Cap.:	xxxx	868	xxxxx	979	868	xxxxx	1617	xxxx	xxxxx	xxxx	xxxx	xxxxx								
Move Cap.:	xxxx	867	xxxxx	971	867	xxxxx	1617	xxxx	xxxxx	xxxx	xxxx	xxxxx								
Volume/Cap:	xxxx	0.01	xxxx	0.00	0.00	xxxx	0.00	xxxx	xxxx	xxxx	xxxx	xxxx								
Level Of Service Module:																				
Queue:	xxxxx	0.0	xxxxx	xxxxx	xxxx	xxxxx	0.0	xxxx	xxxxx	xxxxx	xxxx	xxxxx								
Stopped Del:	xxxxx	9.2	xxxxx	xxxxx	xxxx	xxxxx	7.2	xxxx	xxxxx	xxxxx	xxxx	xxxxx								
LOS by Move:	*	A	*	*	*	*	A	*	*	*	*	*								
Movement:	LT	-	LTR	-	RT	LT	-	LTR	-	RT	LT	-	LTR	-	RT	LT	-	LTR	-	RT
Shared Cap.:	xxxx	xxxx	xxxxx	916	xxxx	xxxxx	xxxx	xxxx	xxxxx	xxxx	xxxx	xxxxx								
SharedQueue:	xxxxx	xxxx	xxxxx	0.0	xxxx	xxxxx	0.0	xxxx	xxxxx	xxxxx	xxxx	xxxxx								
Shrd StpDel:	xxxxx	xxxx	xxxxx	9.0	xxxx	xxxxx	7.2	xxxx	xxxxx	xxxxx	xxxx	xxxxx								
Shared LOS:	*	*	*	A	*	*	A	*	*	*	*	*								
ApproachDel:	9.2			9.0			xxxxxx			xxxxxx										
ApproachLOS:	A			A			*			*										

Wilson Creek Estates
Traffic Impact Analysis

Level Of Service Computation Report
2000 HCM Unsignalized Method (Future Volume Alternative)

Intersection #5 Oak Glen Rd & Pendleton Rd

Average Delay (sec/veh): 3.2 Worst Case Level Of Service: B[11.3]

Approach:	North Bound						South Bound						East Bound						West Bound					
Movement:	L	-	T	-	R		L	-	T	-	R		L	-	T	-	R		L	-	T	-	R	
Control:	Stop Sign						Stop Sign						Uncontrolled						Uncontrolled					
Rights:	Include						Include						Include						Include					
Lanes:	0	0	1!	0	0		0	0	1!	0	0		0	0	1!	0	0		0	0	0	1	0	
Volume Module:																								
Base Vol:	26		0		4		0		0		0		0		51		10		0		117		0	
Growth Adj:	1.00	1.00	1.00	1.00	1.00	1.00	1.00	1.00	1.00	1.00	1.00	1.00	1.00	1.00	1.00	1.00	1.00	1.00	1.00	1.00	1.00	1.00	1.00	1.00
Initial Bse:	26		0		4		0		0		0		0		51		10		0		117		0	
Added Vol:	0		1		0		1		3		52		18		10		0		0		30		2	
PasserByVol:	0		0		0		0		0		0		0		0		0		0		0		0	
Initial Fut:	26		1		4		1		3		52		18		61		10		0		147		2	
User Adj:	1.00	1.00	1.00	1.00	1.00	1.00	1.00	1.00	1.00	1.00	1.00	1.00	1.00	1.00	1.00	1.00	1.00	1.00	1.00	1.00	1.00	1.00	1.00	1.00
PHF Adj:	0.84	0.84	0.84	0.84	0.84	0.84	0.84	0.84	0.84	0.84	0.84	0.84	0.84	0.84	0.84	0.84	0.84	0.84	0.84	0.84	0.84	0.84	0.84	0.84
PHF Volume:	31		1		5		1		4		62		21		73		12		0		175		2	
Reduct Vol:	0		0		0		0		0		0		0		0		0		0		0		0	
Final Vol.:	31		1		5		1		4		62		21		73		12		0		175		2	
Critical Gap Module:																								
Critical Gp:	7.1		6.5		6.2		7.1		6.5		6.2		4.1	xxxx	xxxxx	xxxxx	xxxx	xxxxx						
FollowUpTim:	3.5		4.0		3.3		3.5		4.0		3.3		2.2	xxxx	xxxxx	xxxxx	xxxx	xxxxx						
Capacity Module:																								
Cnflict Vol:	330		299		79		301		304		176		177	xxxx	xxxxx	xxxx	xxxx	xxxxx						
Potent Cap.:	627		617		988		656		613		872		1411	xxxx	xxxxx	xxxx	xxxx	xxxxx						
Move Cap.:	573		607		988		644		603		872		1411	xxxx	xxxxx	xxxx	xxxx	xxxxx						
Volume/Cap:	0.05	0.00	0.00	0.00	0.01	0.07	0.02	xxxx	xxxx	xxxx	xxxx	xxxx												
Level Of Service Module:																								
Queue:	xxxxx	xxxx	xxxxx	xxxxx	xxxx	xxxxx							0.0	xxxx	xxxxx	xxxxx	xxxx	xxxxx						
Stopped Del:	xxxxx	xxxx	xxxxx	xxxxx	xxxx	xxxxx							7.6	xxxx	xxxxx	xxxxx	xxxx	xxxxx						
LOS by Move:	*		*		*		*		*		*		A		*		*		*		*		*	
Movement:	LT	-	LTR	-	RT		LT	-	LTR	-	RT		LT	-	LTR	-	RT		LT	-	LTR	-	RT	
Shared Cap.:	xxxx		607	xxxxx			xxxx		847	xxxxx			xxxx	xxxx	xxxxx				xxxx	xxxx	xxxxx			
SharedQueue:	xxxxx		0.2	xxxxx			xxxxx		0.3	xxxxx			xxxxx	xxxx	xxxxx				xxxxx	xxxx	xxxxx			
Shrd StpDel:	xxxxx		11.3	xxxxx			xxxxx		9.6	xxxxx			xxxxx	xxxx	xxxxx				xxxxx	xxxx	xxxxx			
Shared LOS:	*		B		*		*		A		*		*		*		*		*		*		*	
ApproachDel:			11.3						9.6				xxxxxx						xxxxxx					
ApproachLOS:			B						A						*						*			

Wilson Creek Estates
Traffic Impact Analysis

Level Of Service Computation Report
2000 HCM Unsignalized Method (Future Volume Alternative)

Intersection #6 Oak Glen Rd & Casa Blance Rd

Average Delay (sec/veh): 2.4 Worst Case Level Of Service: B[10.0]

Approach:	North Bound				South Bound				East Bound				West Bound			
Movement:	L	- T	- R		L	- T	- R		L	- T	- R		L	- T	- R	
Control:	Stop Sign				Stop Sign				Uncontrolled				Uncontrolled			
Rights:	Include				Include				Include				Include			
Lanes:	1	0	0	0 0	0	0	0	0 1	0	0	1!	0 0	0	0	1	0 0
Volume Module:																
Base Vol:	37	0	0	0	0	0	0	0	44	10	0	79	0			
Growth Adj:	1.00	1.00	1.00	1.00	1.00	1.00	1.00	1.00	1.00	1.00	1.00	1.00				
Initial Bse:	37	0	0	0	0	0	0	44	10	0	79	0				
Added Vol:	0	0	0	0	0	12	4	7	0	0	20	0				
PasserByVol:	0	0	0	0	0	0	0	0	0	0	0	0				
Initial Fut:	37	0	0	0	0	12	4	51	10	0	99	0				
User Adj:	1.00	1.00	1.00	1.00	1.00	1.00	1.00	1.00	1.00	1.00	1.00	1.00				
PHF Adj:	0.87	0.87	0.87	0.87	0.87	0.87	0.87	0.87	0.87	0.87	0.87	0.87				
PHF Volume:	43	0	0	0	0	14	5	59	11	0	114	0				
Reduct Vol:	0	0	0	0	0	0	0	0	0	0	0	0				
Final Vol.:	43	0	0	0	0	14	5	59	11	0	114	0				
Critical Gap Module:																
Critical Gp:	7.1	xxxx	xxxxx	xxxxx	xxxx	6.2	4.1	xxxx	xxxxx	xxxxx	xxxx	xxxxx				
FollowUpTim:	3.5	xxxx	xxxxx	xxxxx	xxxx	3.3	2.2	xxxx	xxxxx	xxxxx	xxxx	xxxxx				
Capacity Module:																
Cnflict Vol:	194	xxxx	xxxxx	xxxx	xxxx	114	114	xxxx	xxxxx	xxxx	xxxx	xxxxx				
Potent Cap.:	770	xxxx	xxxxx	xxxx	xxxx	944	1488	xxxx	xxxxx	xxxx	xxxx	xxxxx				
Move Cap.:	756	xxxx	xxxxx	xxxx	xxxx	944	1488	xxxx	xxxxx	xxxx	xxxx	xxxxx				
Volume/Cap:	0.06	xxxx	xxxx	xxxx	xxxx	0.01	0.00	xxxx	xxxx	xxxx	xxxx	xxxx				
Level Of Service Module:																
Queue:	0.2	xxxx	xxxxx	xxxxx	xxxx	0.0	0.0	xxxx	xxxxx	xxxxx	xxxx	xxxxx				
Stopped Del:	10.0	xxxx	xxxxx	xxxxx	xxxx	8.9	7.4	xxxx	xxxxx	xxxxx	xxxx	xxxxx				
LOS by Move:	B	*	*	*	*	A	A	*	*	*	*	*				
Movement:	LT -	LTR -	RT	LT -	LTR -	RT	LT -	LTR -	RT	LT -	LTR -	RT				
Shared Cap.:	xxxx	xxxx	xxxxx	xxxx	xxxx	xxxxx	xxxx	xxxx	xxxxx	xxxx	xxxx	xxxxx				
SharedQueue:	xxxxx	xxxx	xxxxx	xxxxx	xxxx	xxxxx	xxxxx	xxxx	xxxxx	xxxxx	xxxx	xxxxx				
Shrd StpDel:	xxxxx	xxxx	xxxxx	xxxxx	xxxx	xxxxx	xxxxx	xxxx	xxxxx	xxxxx	xxxx	xxxxx				
Shared LOS:	*	*	*	*	*	*	*	*	*	*	*	*				
ApproachDel:	10.0			8.9			xxxxxx			xxxxxx						
ApproachLOS:	B			A			*			*						

Wilson Creek Estates
Traffic Impact Analysis

Level Of Service Computation Report
2000 HCM Unsignalized Method (Future Volume Alternative)

Intersection #7 Oak Glen Rd & Cherry Croft Rd

Average Delay (sec/veh): 0.1 Worst Case Level Of Service: A[9.8]

Approach:	North Bound					South Bound					East Bound					West Bound				
Movement:	L	-	T	-	R	L	-	T	-	R	L	-	T	-	R	L	-	T	-	R
Control:	Stop Sign					Stop Sign					Uncontrolled					Uncontrolled				
Rights:	Include					Include					Include					Include				
Lanes:	0	0	0	0	0	0	0	0	0	1	1	0	1	0	0	0	0	1	0	0
Volume Module:																				
Base Vol:	0	0	0	0	0	1	0	60	0	0	144	0								
Growth Adj:	1.00	1.00	1.00	1.00	1.00	1.00	1.00	1.00	1.00	1.00	1.00	1.00								
Initial Bse:	0	0	0	0	0	1	0	60	0	0	144	0								
Added Vol:	0	0	0	0	0	3	1	28	0	0	83	0								
PasserByVol:	0	0	0	0	0	0	0	0	0	0	0	0								
Initial Fut:	0	0	0	0	0	4	1	88	0	0	227	0								
User Adj:	1.00	1.00	1.00	1.00	1.00	1.00	1.00	1.00	1.00	1.00	1.00	1.00								
PHF Adj:	0.80	0.80	0.80	0.80	0.80	0.80	0.80	0.80	0.80	0.80	0.80	0.80								
PHF Volume:	0	0	0	0	0	5	1	110	0	0	284	0								
Reduct Vol:	0	0	0	0	0	0	0	0	0	0	0	0								
Final Vol.:	0	0	0	0	0	5	1	110	0	0	284	0								
Critical Gap Module:																				
Critical Gp:	xxxxx	xxxx	xxxxx	xxxxx	xxxx	6.2	4.1	xxxx	xxxxx	xxxxx	xxxx	xxxxx								
FollowUpTim:	xxxxx	xxxx	xxxxx	xxxxx	xxxx	3.3	2.2	xxxx	xxxxx	xxxxx	xxxx	xxxxx								
Capacity Module:																				
Cnflict Vol:	xxxx	xxxx	xxxxx	xxxx	xxxx	284	284	xxxx	xxxxx	xxxx	xxxx	xxxxx								
Potent Cap.:	xxxx	xxxx	xxxxx	xxxx	xxxx	760	1290	xxxx	xxxxx	xxxx	xxxx	xxxxx								
Move Cap.:	xxxx	xxxx	xxxxx	xxxx	xxxx	760	1290	xxxx	xxxxx	xxxx	xxxx	xxxxx								
Volume/Cap:	xxxx	xxxx	xxxx	xxxx	xxxx	0.01	0.00	xxxx	xxxx	xxxx	xxxx	xxxx								
Level Of Service Module:																				
Queue:	xxxxx	xxxx	xxxxx	xxxxx	xxxx	0.0	0.0	xxxx	xxxxx	xxxxx	xxxx	xxxxx								
Stopped Del:	xxxxx	xxxx	xxxxx	xxxxx	xxxx	9.8	7.8	xxxx	xxxxx	xxxxx	xxxx	xxxxx								
LOS by Move:	*	*	*	*	*	A	A	*	*	*	*	*								
Movement:	LT	-	LTR	-	RT	LT	-	LTR	-	RT	LT	-	LTR	-	RT	LT	-	LTR	-	RT
Shared Cap.:	xxxx	xxxx	xxxxx	xxxx	xxxx	xxxxx	xxxx	xxxx	xxxxx	xxxx	xxxx	xxxxx								
SharedQueue:	xxxxx	xxxx	xxxxx	xxxxx	xxxx	xxxxx	xxxxx	xxxx	xxxxx	xxxxx	xxxx	xxxxx								
Shrd StpDel:	xxxxx	xxxx	xxxxx	xxxxx	xxxx	xxxxx	xxxxx	xxxx	xxxxx	xxxxx	xxxx	xxxxx								
Shared LOS:	*	*	*	*	*	*	*	*	*	*	*	*								
ApproachDel:	xxxxxx					9.8			xxxxxx				xxxxxx							
ApproachLOS:	*					A			*				*							

Wilson Creek Estates
Traffic Impact Analysis

Level Of Service Computation Report
2000 HCM Unsignalized Method (Future Volume Alternative)

Intersection #8 Pendleton Rd & Date Ave

Average Delay (sec/veh): 4.7 Worst Case Level Of Service: A[8.4]

Approach:	North Bound					South Bound					East Bound					West Bound				
Movement:	L	-	T	-	R	L	-	T	-	R	L	-	T	-	R	L	-	T	-	R
Control:	Uncontrolled					Uncontrolled					Stop Sign					Stop Sign				
Rights:	Include					Include					Include					Include				
Lanes:	0	1	0	0	0	0	0	0	0	1	0	0	1!	0	0	0	0	1!	0	0
Volume Module:																				
Base Vol:	2	1	0	0	0	14	19	0	1	0	0	0								
Growth Adj:	1.00	1.00	1.00	1.00	1.00	1.00	1.00	1.00	1.00	1.00	1.00	1.00								
Initial Bse:	2	1	0	0	0	14	19	0	1	0	0	0								
Added Vol:	0	0	0	0	0	3	1	0	0	0	0	0								
PasserByVol:	0	0	0	0	0	0	0	0	0	0	0	0								
Initial Fut:	2	1	0	0	0	17	20	0	1	0	0	0								
User Adj:	1.00	1.00	1.00	1.00	1.00	1.00	1.00	1.00	1.00	1.00	1.00	1.00								
PHF Adj:	0.84	0.84	0.84	0.84	0.84	0.84	0.84	0.84	0.84	0.84	0.84	0.84								
PHF Volume:	2	1	0	0	0	20	24	0	1	0	0	0								
Reduct Vol:	0	0	0	0	0	0	0	0	0	0	0	0								
Final Vol.:	2	1	0	0	0	20	24	0	1	0	0	0								
Critical Gap Module:																				
Critical Gp:	4.1	xxxx	xxxxx	xxxxx	xxxx	xxxxx	6.4	xxxx	6.2	xxxxx	xxxx	xxxxx								
FollowUpTim:	2.2	xxxx	xxxxx	xxxxx	xxxx	xxxxx	3.5	xxxx	3.3	xxxxx	xxxx	xxxxx								
Capacity Module:																				
Cnflict Vol:	20	xxxx	xxxxx	xxxx	xxxx	xxxxx	6	xxxx	0	xxxx	xxxx	xxxxx								
Potent Cap.:	1609	xxxx	xxxxx	xxxx	xxxx	xxxxx	1021	xxxx	0	xxxx	xxxx	xxxxx								
Move Cap.:	1609	xxxx	xxxxx	xxxx	xxxx	xxxxx	1020	xxxx	0	xxxx	xxxx	xxxxx								
Volume/Cap:	0.00	xxxx	xxxx	xxxx	xxxx	xxxx	0.02	xxxx	0.00	xxxx	xxxx	xxxx								
Level Of Service Module:																				
Queue:	0.0	xxxx	xxxxx	xxxxx	xxxx	xxxxx	xxxxx	xxxx	xxxxx	xxxxx	xxxx	xxxxx								
Stopped Del:	7.2	xxxx	xxxxx	xxxxx	xxxx	xxxxx	xxxxx	xxxx	xxxxx	xxxxx	xxxx	xxxxx								
LOS by Move:	A	*	*	*	*	*	*	*	*	*	*	*								
Movement:	LT	-	LTR	-	RT	LT	-	LTR	-	RT	LT	-	LTR	-	RT	LT	-	LTR	-	RT
Shared Cap.:	xxxx	xxxx	xxxxx	xxxx	xxxx	xxxxx	xxxx	1071	xxxxx	xxxx	0	xxxxx								
SharedQueue:	0.0	xxxx	xxxxx	xxxxx	xxxx	xxxxx	xxxxx	0.1	xxxxx	xxxxx	xxxx	xxxxx								
Shrd StpDel:	7.2	xxxx	xxxxx	xxxxx	xxxx	xxxxx	xxxxx	8.4	xxxxx	xxxxx	xxxx	xxxxx								
Shared LOS:	A	*	*	*	*	*	*	A	*	*	*	*								
ApproachDel:	xxxxxx			xxxxxx				8.4			xxxxxx									
ApproachLOS:	*			*				A			*									

Wilson Creek Estates
Traffic Impact Analysis

Level Of Service Computation Report
2000 HCM Unsignalized Method (Future Volume Alternative)

Intersection #9 Jefferson St & Fir Ave

Average Delay (sec/veh): 4.7 Worst Case Level Of Service: A[8.3]

Approach:	North Bound				South Bound				East Bound				West Bound			
Movement:	L	- T	- R		L	- T	- R		L	- T	- R		L	- T	- R	
Control:	Uncontrolled				Uncontrolled				Stop Sign				Stop Sign			
Rights:	Include				Include				Include				Include			
Lanes:	0 1	0 0	0		0 0	1 0	0		0 0	0 0	1		0 0	0 0	0	
Volume Module:																
Base Vol:	0	0	0	0	0	0	0	0	0	0	0	0	0	0	0	0
Growth Adj:	1.00	1.00	1.00	1.00	1.00	1.00	1.00	1.00	1.00	1.00	1.00	1.00	1.00	1.00	1.00	1.00
Initial Bse:	0	0	0	0	0	0	0	0	0	0	0	0	0	0	0	0
Added Vol:	9	5	0	0	2	0	0	0	3	0	0	0	0	0	0	0
PasserByVol:	0	0	0	0	0	0	0	0	0	0	0	0	0	0	0	0
Initial Fut:	9	5	0	0	2	0	0	0	3	0	0	0	0	0	0	0
User Adj:	1.00	1.00	1.00	1.00	1.00	1.00	1.00	1.00	1.00	1.00	1.00	1.00	1.00	1.00	1.00	1.00
PHF Adj:	0.95	0.95	0.95	0.95	0.95	0.95	0.95	0.95	0.95	0.95	0.95	0.95	0.95	0.95	0.95	0.95
PHF Volume:	9	5	0	0	2	0	0	0	3	0	0	0	0	0	0	0
Reduct Vol:	0	0	0	0	0	0	0	0	0	0	0	0	0	0	0	0
Final Vol.:	9	5	0	0	2	0	0	0	3	0	0	0	0	0	0	0
Critical Gap Module:																
Critical Gp:	4.1	xxxx	xxxxx	xxxxx	xxxx	xxxxx	xxxxx	xxxx	6.2	xxxxx	xxxx	xxxxx				
FollowUpTim:	2.2	xxxx	xxxxx	xxxxx	xxxx	xxxxx	xxxxx	xxxx	3.3	xxxxx	xxxx	xxxxx				
Capacity Module:																
Cnflict Vol:	2	xxxx	xxxxx	xxxx	xxxx	xxxxx	xxxx	xxxx	2	xxxx	xxxx	xxxxx				
Potent Cap.:	1633	xxxx	xxxxx	xxxx	xxxx	xxxxx	xxxx	xxxx	1088	xxxx	xxxx	xxxxx				
Move Cap.:	1633	xxxx	xxxxx	xxxx	xxxx	xxxxx	xxxx	xxxx	1088	xxxx	xxxx	xxxxx				
Volume/Cap:	0.01	xxxx	xxxx	xxxx	xxxx	xxxx	xxxx	xxxx	0.00	xxxx	xxxx	xxxx				
Level Of Service Module:																
Queue:	0.0	xxxx	xxxxx	xxxxx	xxxx	xxxxx	xxxxx	xxxx	0.0	xxxxx	xxxx	xxxxx				
Stopped Del:	7.2	xxxx	xxxxx	xxxxx	xxxx	xxxxx	xxxxx	xxxx	8.3	xxxxx	xxxx	xxxxx				
LOS by Move:	A	*	*	*	*	*	*	*	A	*	*	*				
Movement:	LT -	LTR -	RT	LT -	LTR -	RT	LT -	LTR -	RT	LT -	LTR -	RT				
Shared Cap.:	xxxx	xxxx	xxxxx	xxxx	xxxx	xxxxx	xxxx	xxxx	xxxxx	xxxx	xxxx	xxxxx				
SharedQueue:	0.0	xxxx	xxxxx	xxxxx	xxxx	xxxxx	xxxxx	xxxx	xxxxx	xxxxx	xxxx	xxxxx				
Shrd StpDel:	7.2	xxxx	xxxxx	xxxxx	xxxx	xxxxx	xxxxx	xxxx	xxxxx	xxxxx	xxxx	xxxxx				
Shared LOS:	A	*	*	*	*	*	*	*	*	*	*	*				
ApproachDel:	xxxxxx			xxxxxx			8.3			xxxxxx						
ApproachLOS:	*			*			A			*						

Wilson Creek Estates
Traffic Impact Analysis

Level Of Service Computation Report
2000 HCM Unsignalized Method (Future Volume Alternative)

****

Intersection #10 Jefferson St & Cherry Croft (B St)

****

Average Delay (sec/veh): 4.1 Worst Case Level Of Service: A[9.3]

****

Approach:	North Bound			South Bound			East Bound			West Bound		
Movement:	L - T - R			L - T - R			L - T - R			L - T - R		
Control:	Uncontrolled			Uncontrolled			Stop Sign			Stop Sign		
Rights:	Include			Include			Include			Include		
Lanes:	0 0 0 1 0			0 1 0 0 0			0 0 1 0 0			0 0 1! 0 0		
Volume Module:												
Base Vol:	0	0	0	0	0	0	0	0	0	0	0	0
Growth Adj:	1.00	1.00	1.00	1.00	1.00	1.00	1.00	1.00	1.00	1.00	1.00	1.00
Initial Bse:	0	0	0	0	0	0	0	0	0	0	0	0
Added Vol:	0	12	8	4	31	0	0	1	0	25	3	11
PasserByVol:	0	0	0	0	0	0	0	0	0	0	0	0
Initial Fut:	0	12	8	4	31	0	0	1	0	25	3	11
User Adj:	1.00	1.00	1.00	1.00	1.00	1.00	1.00	1.00	1.00	1.00	1.00	1.00
PHF Adj:	0.95	0.95	0.95	0.95	0.95	0.95	0.95	0.95	0.95	0.95	0.95	0.95
PHF Volume:	0	13	8	4	33	0	0	1	0	26	3	12
Reduct Vol:	0	0	0	0	0	0	0	0	0	0	0	0
Final Vol.:	0	13	8	4	33	0	0	1	0	26	3	12
Critical Gap Module:												
Critical Gp:	xxxxx	xxxx	xxxxx	4.1	xxxx	xxxxx	xxxxx	6.5	xxxxx	7.1	6.5	6.2
FollowUpTim:	xxxxx	xxxx	xxxxx	2.2	xxxx	xxxxx	xxxxx	4.0	xxxxx	3.5	4.0	3.3
Capacity Module:												
Cnflict Vol:	xxxx	xxxx	xxxxx	21	xxxx	xxxxx	xxxx	62	xxxxx	58	58	17
Potent Cap.:	xxxx	xxxx	xxxxx	1608	xxxx	xxxxx	xxxx	833	xxxxx	943	837	1068
Move Cap.:	xxxx	xxxx	xxxxx	1608	xxxx	xxxxx	xxxx	830	xxxxx	940	835	1068
Volume/Cap:	xxxx	xxxx	xxxx	0.00	xxxx	xxxx	xxxx	0.00	xxxx	0.03	0.00	0.01
Level Of Service Module:												
Queue:	xxxxx	xxxx	xxxxx	0.0	xxxx	xxxxx	xxxxx	0.0	xxxxx	xxxxx	xxxx	xxxxx
Stopped Del:	xxxxx	xxxx	xxxxx	7.2	xxxx	xxxxx	xxxxx	9.3	xxxxx	xxxxx	xxxx	xxxxx
LOS by Move:	*	*	*	A	*	*	*	A	*	*	*	*
Movement:	LT - LTR - RT			LT - LTR - RT			LT - LTR - RT			LT - LTR - RT		
Shared Cap.:	xxxx	xxxx	xxxxx	xxxx	xxxx	xxxxx	xxxx	xxxx	xxxxx	xxxx	963	xxxxx
SharedQueue:	xxxxx	xxxx	xxxxx	0.0	xxxx	xxxxx	xxxxx	xxxx	xxxxx	xxxxx	0.1	xxxxx
Shrd StpDel:	xxxxx	xxxx	xxxxx	7.2	xxxx	xxxxx	xxxxx	xxxx	xxxxx	xxxxx	8.9	xxxxx
Shared LOS:	*	*	*	A	*	*	*	*	*	*	A	*
ApproachDel:	xxxxxx			xxxxxx			9.3			8.9		
ApproachLOS:	*			*			A			A		

Wilson Creek Estates
Traffic Impact Analysis

Level Of Service Computation Report
2000 HCM Unsignalized Method (Future Volume Alternative)

****

Intersection #11 Oak Glen Rd & O St

****

Average Delay (sec/veh): 1.5 Worst Case Level Of Service: A[8.7]

****

Approach:	North Bound						South Bound						East Bound						West Bound					
Movement:	L	-	T	-	R		L	-	T	-	R		L	-	T	-	R		L	-	T	-	R	
Control:	Stop Sign						Stop Sign						Uncontrolled						Uncontrolled					
Rights:	Include						Include						Include						Include					
Lanes:	0	0	1!	0	0		0	0	0	0	1		0	1	0	0	0		0	0	1	0	0	
Volume Module:																								
Base Vol:	0	0	0	0	0	0	0	44	0	0	79	0												
Growth Adj:	1.00	1.00	1.00	1.00	1.00	1.00	1.00	1.00	1.00	1.00	1.00	1.00												
Initial Bse:	0	0	0	0	0	0	0	44	0	0	79	0												
Added Vol:	0	0	0	0	0	20	7	0	0	0	0	0												
PasserByVol:	0	0	0	0	0	0	0	0	0	0	0	0												
Initial Fut:	0	0	0	0	0	20	7	44	0	0	79	0												
User Adj:	1.00	1.00	1.00	1.00	1.00	1.00	1.00	1.00	1.00	1.00	1.00	1.00												
PHF Adj:	0.95	0.95	0.95	0.95	0.95	0.95	0.95	0.95	0.95	0.95	0.95	0.95												
PHF Volume:	0	0	0	0	0	21	7	46	0	0	83	0												
Reduct Vol:	0	0	0	0	0	0	0	0	0	0	0	0												
Final Vol.:	0	0	0	0	0	21	7	46	0	0	83	0												
Critical Gap Module:																								
Critical Gp:	xxxxx	xxxx	xxxxx	xxxxx	xxxx	6.2	4.1	xxxx	xxxxx	xxxxx	xxxx	xxxxx												
FollowUpTim:	xxxxx	xxxx	xxxxx	xxxxx	xxxx	3.3	2.2	xxxx	xxxxx	xxxxx	xxxx	xxxxx												
Capacity Module:																								
Cnflict Vol:	xxxx	xxxx	xxxxx	xxxx	xxxx	83	83	xxxx	xxxxx	xxxx	xxxx	xxxxx												
Potent Cap.:	xxxx	xxxx	xxxxx	xxxx	xxxx	982	1527	xxxx	xxxxx	xxxx	xxxx	xxxxx												
Move Cap.:	xxxx	xxxx	xxxxx	xxxx	xxxx	982	1527	xxxx	xxxxx	xxxx	xxxx	xxxxx												
Volume/Cap:	xxxx	xxxx	xxxx	xxxx	xxxx	0.02	0.00	xxxx	xxxx	xxxx	xxxx	xxxx												
Level Of Service Module:																								
Queue:	xxxxx	xxxx	xxxxx	xxxxx	xxxx	0.1	0.0	xxxx	xxxxx	xxxxx	xxxx	xxxxx												
Stopped Del:	xxxxx	xxxx	xxxxx	xxxxx	xxxx	8.7	7.4	xxxx	xxxxx	xxxxx	xxxx	xxxxx												
LOS by Move:	*	*	*	*	*	A	A	*	*	*	*	*												
Movement:	LT -	LTR -	RT	LT -	LTR -	RT	LT -	LTR -	RT	LT -	LTR -	RT												
Shared Cap.:	xxxx	0	xxxxx	xxxx	xxxx	xxxxx	xxxx	xxxx	xxxxx	xxxx	xxxx	xxxxx												
SharedQueue:	xxxxx	xxxx	xxxxx	xxxxx	xxxx	xxxxx	0.0	xxxx	xxxxx	xxxxx	xxxx	xxxxx												
Shrd StpDel:	xxxxx	xxxx	xxxxx	xxxxx	xxxx	xxxxx	7.4	xxxx	xxxxx	xxxxx	xxxx	xxxxx												
Shared LOS:	*	*	*	*	*	*	A	*	*	*	*	*												
ApproachDel:	xxxxxx			8.7			xxxxxx			xxxxxx														
ApproachLOS:	*			A			*			*														

Wilson Creek Estates
Traffic Impact Analysis

Level Of Service Computation Report
2000 HCM Operations Method (Future Volume Alternative)

Intersection #1 Oak Glen Rd & Bryant St

Cycle (sec): 60 Critical Vol./Cap. (X): 0.483
Loss Time (sec): 4 (Y+R = 4 sec) Average Delay (sec/veh): 18.3
Optimal Cycle: 21 Level Of Service: B

Approach:	North Bound			South Bound			East Bound			West Bound		
Movement:	L - T - R			L - T - R			L - T - R			L - T - R		
Control:	Protected			Protected			Protected			Protected		
Rights:	Include			Include			Include			Include		
Min. Green:	0	0	0	0	0	0	0	0	0	0	0	0
Lanes:	1 0 2 0 1			1 0 2 0 1			1 0 1 0 1			1 0 1 0 1		
Volume Module:												
Base Vol:	172	203	48	41	261	196	270	169	221	48	107	65
Growth Adj:	1.00	1.00	1.00	1.00	1.00	1.00	1.00	1.00	1.00	1.00	1.00	1.00
Initial Bse:	172	203	48	41	261	196	270	169	221	48	107	65
Added Vol:	0	4	50	0	3	4	6	46	0	30	28	0
PasserByVol:	0	0	0	0	0	0	0	0	0	0	0	0
Initial Fut:	172	207	98	41	264	200	276	215	221	78	135	65
User Adj:	1.00	1.00	1.00	1.00	1.00	1.00	1.00	1.00	1.00	1.00	1.00	1.00
PHF Adj:	1.00	1.00	1.00	1.00	1.00	1.00	1.00	1.00	1.00	1.00	1.00	1.00
PHF Volume:	172	207	98	41	264	200	276	215	221	78	135	65
Reduct Vol:	0	0	0	0	0	0	0	0	0	0	0	0
Reduced Vol:	172	207	98	41	264	200	276	215	221	78	135	65
PCE Adj:	1.00	1.00	1.00	1.00	1.00	1.00	1.00	1.00	1.00	1.00	1.00	1.00
MLF Adj:	1.00	1.00	1.00	1.00	1.00	1.00	1.00	1.00	1.00	1.00	1.00	1.00
Final Vol.:	172	207	98	41	264	200	276	215	221	78	135	65
Saturation Flow Module:												
Sat/Lane:	1800	1800	1800	1800	1800	1800	1800	1800	1800	1800	1800	1800
Adjustment:	0.94	1.00	1.00	0.94	1.00	1.00	0.94	1.00	1.00	0.94	1.00	1.00
Lanes:	1.00	2.00	1.00	1.00	2.00	1.00	1.00	1.00	1.00	1.00	1.00	1.00
Final Sat.:	1692	3600	1800	1692	3600	1800	1692	1800	1800	1692	1800	1800
Capacity Analysis Module:												
Vol/Sat:	0.10	0.06	0.05	0.02	0.07	0.11	0.16	0.12	0.12	0.05	0.08	0.04
Crit Moves:	****					****	****				****	
Green/Cycle:	0.21	0.31	0.31	0.13	0.23	0.23	0.34	0.36	0.36	0.13	0.16	0.16
Volume/Cap:	0.48	0.19	0.18	0.19	0.32	0.48	0.48	0.33	0.34	0.34	0.48	0.23
Delay/Veh:	21.9	15.2	15.3	23.6	19.4	20.9	16.4	14.3	14.4	24.5	24.5	22.6
User DelAdj:	1.00	1.00	1.00	1.00	1.00	1.00	1.00	1.00	1.00	1.00	1.00	1.00
AdjDel/Veh:	21.9	15.2	15.3	23.6	19.4	20.9	16.4	14.3	14.4	24.5	24.5	22.6
HCM2kAvg:	3	1	1	1	2	4	5	3	3	2	3	1

Wilson Creek Estates
Traffic Impact Analysis

Level Of Service Computation Report
2000 HCM Operations Method (Future Volume Alternative)

Intersection #2 Bryant St & Fir Ave

Cycle (sec): 60 Critical Vol./Cap. (X): 0.153
Loss Time (sec): 4 (Y+R = 4 sec) Average Delay (sec/veh): 3.3
Optimal Cycle: 14 Level Of Service: A

Approach:	North Bound			South Bound			East Bound			West Bound		
Movement:	L - T - R			L - T - R			L - T - R			L - T - R		
Control:	Permitted			Permitted			Permitted			Permitted		
Rights:	Include			Include			Include			Include		
Min. Green:	0	0	0	0	0	0	0	0	0	0	0	0
Lanes:	1 0 2	0 1		1 0 1	1 0		0 0 1!	0 0		0 0 1!	0 0	
Volume Module:												
Base Vol:	30	359	33	3	411	16	10	4	29	20	1	3
Growth Adj:	1.00	1.00	1.00	1.00	1.00	1.00	1.00	1.00	1.00	1.00	1.00	1.00
Initial Bse:	30	359	33	3	411	16	10	4	29	20	1	3
Added Vol:	0	0	10	0	0	0	0	0	0	6	0	0
PasserByVol:	0	0	0	0	0	0	0	0	0	0	0	0
Initial Fut:	30	359	43	3	411	16	10	4	29	26	1	3
User Adj:	1.00	1.00	1.00	1.00	1.00	1.00	1.00	1.00	1.00	1.00	1.00	1.00
PHF Adj:	1.00	1.00	1.00	1.00	1.00	1.00	1.00	1.00	1.00	1.00	1.00	1.00
PHF Volume:	30	359	43	3	411	16	10	4	29	26	1	3
Reduct Vol:	0	0	0	0	0	0	0	0	0	0	0	0
Reduced Vol:	30	359	43	3	411	16	10	4	29	26	1	3
PCE Adj:	1.00	1.00	1.00	1.00	1.00	1.00	1.00	1.00	1.00	1.00	1.00	1.00
MLF Adj:	1.00	1.00	1.00	1.00	1.00	1.00	1.00	1.00	1.00	1.00	1.00	1.00
Final Vol.:	30	359	43	3	411	16	10	4	29	26	1	3
Saturation Flow Module:												
Sat/Lane:	1800	1800	1800	1800	1800	1800	1800	1800	1800	1800	1800	1800
Adjustment:	0.94	1.00	1.00	0.94	1.00	1.00	0.94	1.00	1.00	0.94	1.00	1.00
Lanes:	1.00	2.00	1.00	1.00	1.93	0.07	0.24	0.09	0.67	0.88	0.03	0.09
Final Sat.:	1692	3600	1800	1692	3465	135	412	165	1196	1478	57	171
Capacity Analysis Module:												
Vol/Sat:	0.02	0.10	0.02	0.00	0.12	0.12	0.02	0.02	0.02	0.02	0.02	0.02
Crit Moves:					****			****				
Green/Cycle:	0.77	0.77	0.77	0.77	0.77	0.77	0.16	0.16	0.16	0.16	0.16	0.16
Volume/Cap:	0.02	0.13	0.03	0.00	0.15	0.15	0.15	0.15	0.15	0.11	0.11	0.11
Delay/Veh:	1.6	1.7	1.6	1.5	1.7	1.7	22.0	22.0	22.0	21.8	21.8	21.8
User DelAdj:	1.00	1.00	1.00	1.00	1.00	1.00	1.00	1.00	1.00	1.00	1.00	1.00
AdjDel/Veh:	1.6	1.7	1.6	1.5	1.7	1.7	22.0	22.0	22.0	21.8	21.8	21.8
HCM2kAvg:	0	1	0	0	1	1	1	1	1	1	1	1

Wilson Creek Estates
Traffic Impact Analysis

Level Of Service Computation Report
2000 HCM Unsignalized Method (Future Volume Alternative)

Intersection #3 Bryant St & Carter St

Average Delay (sec/veh): 1.5 Worst Case Level Of Service: C[16.5]

Approach:	North Bound				South Bound				East Bound				West Bound			
Movement:	L	- T	- R		L	- T	- R		L	- T	- R		L	- T	- R	
Control:	Uncontrolled				Uncontrolled				Stop Sign				Stop Sign			
Rights:	Include				Include				Include				Include			
Lanes:	1 0 0	1 0			1 0 0	1 0			0 0 1!	0 0			0 0 1!	0 0		
Volume Module:																
Base Vol:	18	266	35		25	367	4		3	0	12		34	0	7	
Growth Adj:	1.00	1.00	1.00		1.00	1.00	1.00		1.00	1.00	1.00		1.00	1.00	1.00	
Initial Bse:	18	266	35		25	367	4		3	0	12		34	0	7	
Added Vol:	0	0	0		0	0	0		0	0	0		0	0	0	
PasserByVol:	0	0	0		0	0	0		0	0	0		0	0	0	
Initial Fut:	18	266	35		25	367	4		3	0	12		34	0	7	
User Adj:	1.00	1.00	1.00		1.00	1.00	1.00		1.00	1.00	1.00		1.00	1.00	1.00	
PHF Adj:	1.00	1.00	1.00		1.00	1.00	1.00		1.00	1.00	1.00		1.00	1.00	1.00	
PHF Volume:	18	266	35		25	367	4		3	0	12		34	0	7	
Reduct Vol:	0	0	0		0	0	0		0	0	0		0	0	0	
Final Vol.:	18	266	35		25	367	4		3	0	12		34	0	7	
Critical Gap Module:																
Critical Gp:	4.1	xxxx	xxxxx		4.1	xxxx	xxxxx		7.1	xxxx	6.2		7.1	xxxx	6.2	
FollowUpTim:	2.2	xxxx	xxxxx		2.2	xxxx	xxxxx		3.5	xxxx	3.3		3.5	xxxx	3.3	
Capacity Module:																
Cnflict Vol:	371	xxxx	xxxxx		301	xxxx	xxxxx		742	xxxx	369		745	xxxx	284	
Potent Cap.:	1199	xxxx	xxxxx		1272	xxxx	xxxxx		334	xxxx	681		333	xxxx	760	
Move Cap.:	1199	xxxx	xxxxx		1272	xxxx	xxxxx		322	xxxx	681		318	xxxx	760	
Volume/Cap:	0.02	xxxx	xxxx		0.02	xxxx	xxxx		0.01	xxxx	0.02		0.11	xxxx	0.01	
Level Of Service Module:																
Queue:	0.0	xxxx	xxxxx		0.1	xxxx	xxxxx	xxxxx	xxxx	xxxxx	xxxxx		xxxx	xxxxx		
Stopped Del:	8.0	xxxx	xxxxx		7.9	xxxx	xxxxx	xxxxx	xxxx	xxxxx	xxxxx		xxxx	xxxxx		
LOS by Move:	A	*	*		A	*	*	*	*	*	*		*	*		
Movement:	LT -	LTR -	RT		LT -	LTR -	RT	LT -	LTR -	RT	LT -	LTR -	RT			
Shared Cap.:	xxxx	xxxx	xxxxx		xxxx	xxxx	xxxxx	xxxx	557	xxxxx	xxxx	354	xxxxx			
SharedQueue:	xxxxx	xxxx	xxxxx		xxxxx	xxxx	xxxxx	xxxxx	0.1	xxxxx	xxxxx	0.4	xxxxx			
Shrd StpDel:	xxxxx	xxxx	xxxxx		xxxxx	xxxx	xxxxx	xxxxx	11.6	xxxxx	xxxxx	16.5	xxxxx			
Shared LOS:	*	*	*		*	*	*	*	B	*	*	C	*			
ApproachDel:	xxxxxx				xxxxxx				11.6			16.5				
ApproachLOS:	*				*				B			C				

Wilson Creek Estates
Traffic Impact Analysis

Level Of Service Computation Report
2000 HCM Unsignalized Method (Future Volume Alternative)

Intersection #4 Carter St & Jefferson St

Average Delay (sec/veh): 3.2 Worst Case Level Of Service: A[9.1]

Approach:	North Bound					South Bound					East Bound					West Bound				
Movement:	L	-	T	-	R	L	-	T	-	R	L	-	T	-	R	L	-	T	-	R
Control:	Stop Sign					Stop Sign					Uncontrolled					Uncontrolled				
Rights:	Include					Include					Include					Include				
Lanes:	0	1	0	0	0	0	0	0	1	0	0	0	1!	0	0	0	0	1	0	0
Volume Module:																				
Base Vol:	2	0	0	0		1	1		1		1	14		2		0	9		0	
Growth Adj:	1.00	1.00	1.00	1.00		1.00	1.00		1.00		1.00	1.00		1.00		1.00	1.00		1.00	
Initial Bse:	2	0	0	0		1	1		1		1	14		2		0	9		0	
Added Vol:	0	3	0	0		6	0		0		0	0		0		0	0		0	
PasserByVol:	0	0	0	0		0	0		0		0	0		0		0	0		0	
Initial Fut:	2	3	0	0		7	1		1		1	14		2		0	9		0	
User Adj:	1.00	1.00	1.00	1.00		1.00	1.00		1.00		1.00	1.00		1.00		1.00	1.00		1.00	
PHF Adj:	1.00	1.00	1.00	1.00		1.00	1.00		1.00		1.00	1.00		1.00		1.00	1.00		1.00	
PHF Volume:	2	3	0	0		7	1		1		1	14		2		0	9		0	
Reduct Vol:	0	0	0	0		0	0		0		0	0		0		0	0		0	
Final Vol.:	2	3	0	0		7	1		1		1	14		2		0	9		0	
Critical Gap Module:																				
Critical Gp:	7.1	6.5	xxxxx	xxxxx		6.5	6.2		4.1		xxxx	xxxxx		xxxxx		xxxx	xxxxx			
FollowUpTim:	3.5	4.0	xxxxx	xxxxx		4.0	3.3		2.2		xxxx	xxxxx		xxxxx		xxxx	xxxxx			
Capacity Module:																				
Cnflict Vol:	30	26	xxxxx	xxxx		27	9		9		xxxx	xxxxx		xxxx		xxxx	xxxxx			
Potent Cap.:	984	871	xxxxx	xxxx		870	1079		1624		xxxx	xxxxx		xxxx		xxxx	xxxxx			
Move Cap.:	976	871	xxxxx	xxxx		870	1079		1624		xxxx	xxxxx		xxxx		xxxx	xxxxx			
Volume/Cap:	0.00	0.00	xxxx	xxxx		0.01	0.00		0.00		xxxx	xxxx		xxxx		xxxx	xxxx			
Level Of Service Module:																				
Queue:	xxxxx	xxxx	xxxxx	xxxxx		xxxx	xxxxx		0.0		xxxx	xxxxx		xxxxx		xxxx	xxxxx			
Stopped Del:	xxxxx	xxxx	xxxxx	xxxxx		xxxx	xxxxx		7.2		xxxx	xxxxx		xxxxx		xxxx	xxxxx			
LOS by Move:	*	*	*	*		*	*		A		*	*		*		*	*			
Movement:	LT	-	LTR	-	RT	LT	-	LTR	-	RT	LT	-	LTR	-	RT	LT	-	LTR	-	RT
Shared Cap.:	910	xxxx	xxxxx	xxxx		xxxx	891		xxxx		xxxx	xxxxx		xxxx		xxxx	xxxxx			
SharedQueue:	0.0	xxxx	xxxxx	xxxxx		xxxx	0.0		xxxxx		xxxx	xxxxx		xxxxx		xxxx	xxxxx			
Shrd StpDel:	9.0	xxxx	xxxxx	xxxxx		xxxx	9.1		xxxxx		xxxx	xxxxx		xxxxx		xxxx	xxxxx			
Shared LOS:	A	*	*	*		*	A		*		*	*		*		*	*			
ApproachDel:	9.0					9.1			xxxxxx					xxxxxx						
ApproachLOS:	A					A			*					*						

Wilson Creek Estates
Traffic Impact Analysis

Level Of Service Computation Report
2000 HCM Unsignalized Method (Future Volume Alternative)

Intersection #5 Oak Glen Rd & Pendleton Rd

Average Delay (sec/veh): 2.6 Worst Case Level Of Service: B[11.4]

Approach:	North Bound			South Bound			East Bound			West Bound		
Movement:	L - T - R			L - T - R			L - T - R			L - T - R		
Control:	Stop Sign			Stop Sign			Uncontrolled			Uncontrolled		
Rights:	Include			Include			Include			Include		
Lanes:	0 0 1! 0 0			0 0 1! 0 0			0 0 1! 0 0			0 0 1! 0 0		
Volume Module:												
Base Vol:	9	0	3	0	0	0	0	106	23	1	87	0
Growth Adj:	1.00	1.00	1.00	1.00	1.00	1.00	1.00	1.00	1.00	1.00	1.00	1.00
Initial Bse:	9	0	3	0	0	0	0	106	23	1	87	0
Added Vol:	0	3	0	2	2	36	59	34	0	0	20	1
PasserByVol:	0	0	0	0	0	0	0	0	0	0	0	0
Initial Fut:	9	3	3	2	2	36	59	140	23	1	107	1
User Adj:	1.00	1.00	1.00	1.00	1.00	1.00	1.00	1.00	1.00	1.00	1.00	1.00
PHF Adj:	1.00	1.00	1.00	1.00	1.00	1.00	1.00	1.00	1.00	1.00	1.00	1.00
PHF Volume:	9	3	3	2	2	36	59	140	23	1	107	1
Reduct Vol:	0	0	0	0	0	0	0	0	0	0	0	0
Final Vol.:	9	3	3	2	2	36	59	140	23	1	107	1
Critical Gap Module:												
Critical Gp:	7.1	6.5	6.2	7.1	6.5	6.2	4.1	xxxx	xxxxx	4.1	xxxx	xxxxx
FollowUpTim:	3.5	4.0	3.3	3.5	4.0	3.3	2.2	xxxx	xxxxx	2.2	xxxx	xxxxx
Capacity Module:												
Cnflict Vol:	398	380	152	382	391	108	108	xxxx	xxxxx	163	xxxx	xxxxx
Potent Cap.:	566	556	900	580	548	952	1495	xxxx	xxxxx	1428	xxxx	xxxxx
Move Cap.:	526	533	900	557	525	952	1495	xxxx	xxxxx	1428	xxxx	xxxxx
Volume/Cap:	0.02	0.01	0.00	0.00	0.00	0.04	0.04	xxxx	xxxx	0.00	xxxx	xxxx
Level Of Service Module:												
Queue:	xxxxx	xxxx	xxxxx	xxxxx	xxxx	xxxxx	0.1	xxxx	xxxxx	0.0	xxxx	xxxxx
Stopped Del:	xxxxx	xxxx	xxxxx	xxxxx	xxxx	xxxxx	7.5	xxxx	xxxxx	7.5	xxxx	xxxxx
LOS by Move:	*	*	*	*	*	*	A	*	*	A	*	*
Movement:	LT - LTR - RT			LT - LTR - RT			LT - LTR - RT			LT - LTR - RT		
Shared Cap.:	xxxx	575	xxxxx	xxxx	885	xxxxx	xxxx	xxxx	xxxxx	xxxx	xxxx	xxxxx
SharedQueue:	xxxxx	0.1	xxxxx	xxxxx	0.1	xxxxx	xxxxx	xxxx	xxxxx	xxxxx	xxxx	xxxxx
Shrd StpDel:	xxxxx	11.4	xxxxx	xxxxx	9.3	xxxxx	xxxxx	xxxx	xxxxx	xxxxx	xxxx	xxxxx
Shared LOS:	*	B	*	*	A	*	*	*	*	*	*	*
ApproachDel:		11.4			9.3		xxxxxx			xxxxxx		
ApproachLOS:		B			A		*			*		

Wilson Creek Estates
Traffic Impact Analysis

Level Of Service Computation Report
2000 HCM Unsignalized Method (Future Volume Alternative)

Intersection #6 Oak Glen Rd & Casa Blance Rd

Average Delay (sec/veh): 1.5 Worst Case Level Of Service: B[10.1]

Approach:	North Bound				South Bound				East Bound				West Bound			
Movement:	L	- T	- R		L	- T	- R		L	- T	- R		L	- T	- R	
Control:	Stop Sign				Stop Sign				Uncontrolled				Uncontrolled			
Rights:	Include				Include				Include				Include			
Lanes:	1 0 0 0 0				0 0 0 0 1				0 0 1! 0 0				0 1 0 0 0			
Volume Module:																
Base Vol:	20	0	0	0	0	0	0	0	70	42	1	69	0			
Growth Adj:	1.00	1.00	1.00	1.00	1.00	1.00	1.00	1.00	1.00	1.00	1.00	1.00				
Initial Bse:	20	0	0	0	0	0	0	70	42	1	69	0				
Added Vol:	0	0	0	0	0	8	13	23	0	0	13	0				
PasserByVol:	0	0	0	0	0	0	0	0	0	0	0	0				
Initial Fut:	20	0	0	0	0	8	13	93	42	1	82	0				
User Adj:	1.00	1.00	1.00	1.00	1.00	1.00	1.00	1.00	1.00	1.00	1.00	1.00				
PHF Adj:	1.00	1.00	1.00	1.00	1.00	1.00	1.00	1.00	1.00	1.00	1.00	1.00				
PHF Volume:	20	0	0	0	0	8	13	93	42	1	82	0				
Reduct Vol:	0	0	0	0	0	0	0	0	0	0	0	0				
Final Vol.:	20	0	0	0	0	8	13	93	42	1	82	0				
Critical Gap Module:																
Critical Gp:	7.1	xxxx	xxxxx	xxxxx	xxxx	6.2	4.1	xxxx	xxxxx	4.1	xxxx	xxxxx				
FollowUpTim:	3.5	xxxx	xxxxx	xxxxx	xxxx	3.3	2.2	xxxx	xxxxx	2.2	xxxx	xxxxx				
Capacity Module:																
Cnflict Vol:	228	xxxx	xxxxx	xxxx	xxxx	82	82	xxxx	xxxxx	135	xxxx	xxxxx				
Potent Cap.:	731	xxxx	xxxxx	xxxx	xxxx	983	1528	xxxx	xxxxx	1462	xxxx	xxxxx				
Move Cap.:	720	xxxx	xxxxx	xxxx	xxxx	983	1528	xxxx	xxxxx	1462	xxxx	xxxxx				
Volume/Cap:	0.03	xxxx	xxxx	xxxx	xxxx	0.01	0.01	xxxx	xxxx	0.00	xxxx	xxxx				
Level Of Service Module:																
Queue:	0.1	xxxx	xxxxx	xxxxx	xxxx	0.0	0.0	xxxx	xxxxx	0.0	xxxx	xxxxx				
Stopped Del:	10.1	xxxx	xxxxx	xxxxx	xxxx	8.7	7.4	xxxx	xxxxx	7.5	xxxx	xxxxx				
LOS by Move:	B	*	*	*	*	A	A	*	*	A	*	*				
Movement:	LT -	LTR -	RT	LT -	LTR -	RT	LT -	LTR -	RT	LT -	LTR -	RT				
Shared Cap.:	xxxx	xxxx	xxxxx	xxxx	xxxx	xxxxx	xxxx	xxxx	xxxxx	xxxx	xxxx	xxxxx				
SharedQueue:	xxxxx	xxxx	xxxxx	xxxxx	xxxx	xxxxx	xxxxx	xxxx	xxxxx	0.0	xxxx	xxxxx				
Shrd StpDel:	xxxxx	xxxx	xxxxx	xxxxx	xxxx	xxxxx	xxxxx	xxxx	xxxxx	7.5	xxxx	xxxxx				
Shared LOS:	*	*	*	*	*	*	*	*	*	A	*	*				
ApproachDel:	10.1			8.7			xxxxxx			xxxxxx						
ApproachLOS:	B			A			*			*						

Wilson Creek Estates
Traffic Impact Analysis

Level Of Service Computation Report
2000 HCM Unsignalized Method (Future Volume Alternative)

Intersection #7 Oak Glen Rd & Cherry Croft Rd

Average Delay (sec/veh): 0.2 Worst Case Level Of Service: A[9.6]

Approach:	North Bound						South Bound						East Bound						West Bound					
Movement:	L	-	T	-	R		L	-	T	-	R		L	-	T	-	R		L	-	T	-	R	
Control:	Stop Sign						Stop Sign						Uncontrolled						Uncontrolled					
Rights:	Include						Include						Include						Include					
Lanes:	0	0	0	0	0		0	0	1!	0	0		1	0	1	0	0		0	0	1	0	0	
Volume Module:																								
Base Vol:	0	0	0				1	0	0				2	137	0				0	96	0			
Growth Adj:	1.00	1.00	1.00				1.00	1.00	1.00				1.00	1.00	1.00				1.00	1.00	1.00			
Initial Bse:	0	0	0				1	0	0				2	137	0				0	96	0			
Added Vol:	0	0	0				0	0	2				3	93	0				0	56	0			
PasserByVol:	0	0	0				0	0	0				0	0	0				0	0	0			
Initial Fut:	0	0	0				1	0	2				5	230	0				0	152	0			
User Adj:	1.00	1.00	1.00				1.00	1.00	1.00				1.00	1.00	1.00				1.00	1.00	1.00			
PHF Adj:	1.00	1.00	1.00				1.00	1.00	1.00				1.00	1.00	1.00				1.00	1.00	1.00			
PHF Volume:	0	0	0				1	0	2				5	230	0				0	152	0			
Reduct Vol:	0	0	0				0	0	0				0	0	0				0	0	0			
Final Vol.:	0	0	0				1	0	2				5	230	0				0	152	0			
Critical Gap Module:																								
Critical Gp:	xxxxx	xxxx	xxxxx				6.4	xxxx	6.2				4.1	xxxx	xxxxx				xxxxx	xxxx	xxxxx			
FollowUpTim:	xxxxx	xxxx	xxxxx				3.5	xxxx	3.3				2.2	xxxx	xxxxx				xxxxx	xxxx	xxxxx			
Capacity Module:																								
Cnflict Vol:	xxxx	xxxx	xxxxx				392	xxxx	152				152	xxxx	xxxxx				xxxx	xxxx	xxxxx			
Potent Cap.:	xxxx	xxxx	xxxxx				616	xxxx	900				1441	xxxx	xxxxx				xxxx	xxxx	xxxxx			
Move Cap.:	xxxx	xxxx	xxxxx				615	xxxx	900				1441	xxxx	xxxxx				xxxx	xxxx	xxxxx			
Volume/Cap:	xxxx	xxxx	xxxx				0.00	xxxx	0.00				0.00	xxxx	xxxx				xxxx	xxxx	xxxx			
Level Of Service Module:																								
Queue:	xxxxx	xxxx	xxxxx	xxxxx	xxxx	xxxxx							0.0	xxxx	xxxxx	xxxxx	xxxx	xxxxx						
Stopped Del:	xxxxx	xxxx	xxxxx	xxxxx	xxxx	xxxxx							7.5	xxxx	xxxxx	xxxxx	xxxx	xxxxx						
LOS by Move:	*	*	*	*	*	*							A	*	*	*	*	*						
Movement:	LT	-	LTR	-	RT		LT	-	LTR	-	RT		LT	-	LTR	-	RT		LT	-	LTR	-	RT	
Shared Cap.:	xxxx	xxxx	xxxxx				xxxx		779	xxxxx			xxxx	xxxx	xxxxx				xxxx	xxxx	xxxxx			
SharedQueue:	xxxxx	xxxx	xxxxx	xxxxx					0.0	xxxxx	xxxxx		xxxx	xxxxx	xxxxx				xxxxx	xxxx	xxxxx			
Shrd StpDel:	xxxxx	xxxx	xxxxx	xxxxx					9.6	xxxxx	xxxxx		xxxx	xxxxx	xxxxx				xxxxx	xxxx	xxxxx			
Shared LOS:	*	*	*	*					A	*	*		*	*	*				*	*	*			
ApproachDel:	xxxxxx								9.6				xxxxxx						xxxxxx					
ApproachLOS:	*								A				*						*					

Wilson Creek Estates
Traffic Impact Analysis

Level Of Service Computation Report
2000 HCM Unsignalized Method (Future Volume Alternative)

Intersection #8 Pendleton Rd & Date Ave

Average Delay (sec/veh): 5.2 Worst Case Level Of Service: A[9.2]

Approach:	North Bound					South Bound					East Bound					West Bound				
Movement:	L	-	T	-	R	L	-	T	-	R	L	-	T	-	R	L	-	T	-	R
Control:	Uncontrolled					Uncontrolled					Stop Sign					Stop Sign				
Rights:	Include					Include					Include					Include				
Lanes:	0	1	0	0	0	0	0	0	1	0	0	0	1!	0	0	0	0	1	0	0
Volume Module:																				
Base Vol:	4	4	0	0		1	19				27	0			4	0		2	0	
Growth Adj:	1.00	1.00	1.00	1.00		1.00	1.00				1.00	1.00			1.00	1.00		1.00	1.00	
Initial Bse:	4	4	0	0		1	19				27	0			4	0		2	0	
Added Vol:	0	0	0	0		0	2				3	0			0	0		0	0	
PasserByVol:	0	0	0	0		0	0				0	0			0	0		0	0	
Initial Fut:	4	4	0	0		1	21				30	0			4	0		2	0	
User Adj:	1.00	1.00	1.00	1.00		1.00	1.00				1.00	1.00			1.00	1.00		1.00	1.00	
PHF Adj:	1.00	1.00	1.00	1.00		1.00	1.00				1.00	1.00			1.00	1.00		1.00	1.00	
PHF Volume:	4	4	0	0		1	21				30	0			4	0		2	0	
Reduct Vol:	0	0	0	0		0	0				0	0			0	0		0	0	
Final Vol.:	4	4	0	0		1	21				30	0			4	0		2	0	
Critical Gap Module:																				
Critical Gp:	4.1	xxxx	xxxxx	xxxxx	xxxx	xxxxx					7.1	xxxx			6.2	xxxxx		6.5	xxxxx	
FollowUpTim:	2.2	xxxx	xxxxx	xxxxx	xxxx	xxxxx					3.5	xxxx			3.3	xxxxx		4.0	xxxxx	
Capacity Module:																				
Cnflict Vol:	22	xxxx	xxxxx	xxxx	xxxx	xxxxx					25	xxxx			12	xxxx		34	xxxxx	
Potent Cap.:	1607	xxxx	xxxxx	xxxx	xxxx	xxxxx					992	xxxx			1075	xxxx		863	xxxxx	
Move Cap.:	1607	xxxx	xxxxx	xxxx	xxxx	xxxxx					988	xxxx			1075	xxxx		860	xxxxx	
Volume/Cap:	0.00	xxxx	xxxx	xxxx	xxxx	xxxx					0.03	xxxx			0.00	xxxx		0.00	xxxx	
Level Of Service Module:																				
Queue:	0.0	xxxx	xxxxx	xxxxx	xxxx	xxxxx	xxxxx	xxxx	xxxxx	xxxxx								0.0	xxxxx	
Stopped Del:	7.2	xxxx	xxxxx	xxxxx	xxxx	xxxxx	xxxxx	xxxx	xxxxx	xxxxx								9.2	xxxxx	
LOS by Move:	A	*	*	*	*	*	*	*	*	*								A	*	
Movement:	LT	-	LTR	-	RT	LT	-	LTR	-	RT	LT	-	LTR	-	RT	LT	-	LTR	-	RT
Shared Cap.:	xxxx	xxxx	xxxxx	xxxx	xxxx	xxxxx	xxxx				998	xxxxx				xxxx	xxxx	xxxxx		
SharedQueue:	0.0	xxxx	xxxxx	xxxxx	xxxx	xxxxx	xxxxx				0.1	xxxxx				xxxxx	xxxx	xxxxx		
Shrd StpDel:	7.2	xxxx	xxxxx	xxxxx	xxxx	xxxxx	xxxxx				8.7	xxxxx				xxxxx	xxxx	xxxxx		
Shared LOS:	A	*	*	*	*	*	*				A	*				*	*	*		
ApproachDel:	xxxxxx					xxxxxx					8.7					9.2				
ApproachLOS:	*					*					A					A				

Wilson Creek Estates
Traffic Impact Analysis

Level Of Service Computation Report
2000 HCM Unsignalized Method (Future Volume Alternative)

Intersection #9 Jefferson St & Fir Ave

Average Delay (sec/veh): 5.1 Worst Case Level Of Service: A[8.4]

Approach:	North Bound					South Bound					East Bound					West Bound				
Movement:	L	-	T	-	R	L	-	T	-	R	L	-	T	-	R	L	-	T	-	R
Control:	Uncontrolled					Uncontrolled					Stop Sign					Stop Sign				
Rights:	Include					Include					Include					Include				
Lanes:	0	1	0	0	0	0	0	1	0	0	0	0	0	0	1	0	0	0	0	0
Volume Module:																				
Base Vol:	0	0	0	0	0	0	0	0	0	0	0	0	0	0	0	0	0	0	0	0
Growth Adj:	1.00	1.00	1.00	1.00	1.00	1.00	1.00	1.00	1.00	1.00	1.00	1.00	1.00	1.00	1.00	1.00	1.00	1.00	1.00	1.00
Initial Bse:	0	0	0	0	0	0	0	0	0	0	0	0	0	0	0	0	0	0	0	0
Added Vol:	6	3	0	0	6	0	0	0	10	0	0	0	0	0	0	0	0	0	0	0
PasserByVol:	0	0	0	0	0	0	0	0	0	0	0	0	0	0	0	0	0	0	0	0
Initial Fut:	6	3	0	0	6	0	0	0	10	0	0	0	0	0	0	0	0	0	0	0
User Adj:	1.00	1.00	1.00	1.00	1.00	1.00	1.00	1.00	1.00	1.00	1.00	1.00	1.00	1.00	1.00	1.00	1.00	1.00	1.00	1.00
PHF Adj:	1.00	1.00	1.00	1.00	1.00	1.00	1.00	1.00	1.00	1.00	1.00	1.00	1.00	1.00	1.00	1.00	1.00	1.00	1.00	1.00
PHF Volume:	6	3	0	0	6	0	0	0	10	0	0	0	0	0	0	0	0	0	0	0
Reduct Vol:	0	0	0	0	0	0	0	0	0	0	0	0	0	0	0	0	0	0	0	0
Final Vol.:	6	3	0	0	6	0	0	0	10	0	0	0	0	0	0	0	0	0	0	0
Critical Gap Module:																				
Critical Gp:	4.1	xxxx	xxxxx	xxxxx	xxxx	xxxxx	xxxxx	xxxx	6.2	xxxxx	xxxx	xxxxx								
FollowUpTim:	2.2	xxxx	xxxxx	xxxxx	xxxx	xxxxx	xxxxx	xxxx	3.3	xxxxx	xxxx	xxxxx								
Capacity Module:																				
Cnflict Vol:	6	xxxx	xxxxx	xxxx	xxxx	xxxxx	xxxx	xxxx	6	xxxx	xxxx	xxxxx								
Potent Cap.:	1628	xxxx	xxxxx	xxxx	xxxx	xxxxx	xxxx	xxxx	1083	xxxx	xxxx	xxxxx								
Move Cap.:	1628	xxxx	xxxxx	xxxx	xxxx	xxxxx	xxxx	xxxx	1083	xxxx	xxxx	xxxxx								
Volume/Cap:	0.00	xxxx	xxxx	xxxx	xxxx	xxxx	xxxx	xxxx	0.01	xxxx	xxxx	xxxx								
Level Of Service Module:																				
Queue:	0.0	xxxx	xxxxx	xxxxx	xxxx	xxxxx	xxxxx	xxxx	0.0	xxxxx	xxxx	xxxxx								
Stopped Del:	7.2	xxxx	xxxxx	xxxxx	xxxx	xxxxx	xxxxx	xxxx	8.4	xxxxx	xxxx	xxxxx								
LOS by Move:	A	*	*	*	*	*	*	*	A	*	*	*								
Movement:	LT	-	LTR	-	RT	LT	-	LTR	-	RT	LT	-	LTR	-	RT	LT	-	LTR	-	RT
Shared Cap.:	xxxx	xxxx	xxxxx	xxxx	xxxx	xxxxx	xxxx	xxxx	xxxxx	xxxx	xxxx	xxxxx								
SharedQueue:	0.0	xxxx	xxxxx	xxxxx	xxxx	xxxxx	xxxxx	xxxx	xxxxx	xxxxx	xxxx	xxxxx								
Shrd StpDel:	7.2	xxxx	xxxxx	xxxxx	xxxx	xxxxx	xxxxx	xxxx	xxxxx	xxxxx	xxxx	xxxxx								
Shared LOS:	A	*	*	*	*	*	*	*	*	*	*	*								
ApproachDel:	xxxxxx			xxxxxx				8.4			xxxxxx									
ApproachLOS:	*			*				A			*									

Wilson Creek Estates
Traffic Impact Analysis

Level Of Service Computation Report
2000 HCM Unsignalized Method (Future Volume Alternative)

****

Intersection #10 Jefferson St & Cherry Croft (B St)

****

Average Delay (sec/veh): 2.8 Worst Case Level Of Service: A[9.7]

****

Approach:	North Bound					South Bound					East Bound					West Bound				
Movement:	L	-	T	-	R	L	-	T	-	R	L	-	T	-	R	L	-	T	-	R
Control:	Uncontrolled					Uncontrolled					Stop Sign					Stop Sign				
Rights:	Include					Include					Include					Include				
Lanes:	0	0	0	1	0	0	1	0	0	0	0	0	1	0	0	0	0	1!	0	0
Volume Module:																				
Base Vol:	0	0	0	0	0	0	0	0	0	0	0	0	0	0	0	0	0	0	0	0
Growth Adj:	1.00	1.00	1.00	1.00	1.00	1.00	1.00	1.00	1.00	1.00	1.00	1.00	1.00	1.00	1.00	1.00	1.00	1.00	1.00	1.00
Initial Bse:	0	0	0	0	0	0	0	0	0	0	0	0	0	0	0	0	0	0	0	0
Added Vol:	0	35	28	13	23	0	0	3	0	17	2	7								
PasserByVol:	0	0	0	0	0	0	0	0	0	0	0	0								
Initial Fut:	0	35	28	13	23	0	0	3	0	17	2	7								
User Adj:	1.00	1.00	1.00	1.00	1.00	1.00	1.00	1.00	1.00	1.00	1.00	1.00								
PHF Adj:	1.00	1.00	1.00	1.00	1.00	1.00	1.00	1.00	1.00	1.00	1.00	1.00								
PHF Volume:	0	35	28	13	23	0	0	3	0	17	2	7								
Reduct Vol:	0	0	0	0	0	0	0	0	0	0	0	0								
Final Vol.:	0	35	28	13	23	0	0	3	0	17	2	7								
Critical Gap Module:																				
Critical Gp:	xxxxx	xxxx	xxxxx	4.1	xxxx	xxxxx	xxxxx	6.5	xxxxx	7.1	6.5	6.2								
FollowUpTim:	xxxxx	xxxx	xxxxx	2.2	xxxx	xxxxx	xxxxx	4.0	xxxxx	3.5	4.0	3.3								
Capacity Module:																				
Cnflict Vol:	xxxx	xxxx	xxxxx	63	xxxx	xxxxx	xxxx	112	xxxxx	99	98	49								
Potent Cap.:	xxxx	xxxx	xxxxx	1553	xxxx	xxxxx	xxxx	782	xxxxx	887	796	1025								
Move Cap.:	xxxx	xxxx	xxxxx	1553	xxxx	xxxxx	xxxx	775	xxxxx	879	789	1025								
Volume/Cap:	xxxx	xxxx	xxxx	0.01	xxxx	xxxx	xxxx	0.00	xxxx	0.02	0.00	0.01								
Level Of Service Module:																				
Queue:	xxxxx	xxxx	xxxxx	0.0	xxxx	xxxxx	xxxxx	0.0	xxxxx	xxxxx	xxxx	xxxxx								
Stopped Del:	xxxxx	xxxx	xxxxx	7.3	xxxx	xxxxx	xxxxx	9.7	xxxxx	xxxxx	xxxx	xxxxx								
LOS by Move:	*	*	*	A	*	*	*	A	*	*	*	*								
Movement:	LT	-	LTR	-	RT	LT	-	LTR	-	RT	LT	-	LTR	-	RT					
Shared Cap.:	xxxx	xxxx	xxxxx	xxxx	xxxx	xxxxx	xxxx	xxxx	xxxxx	xxxx	906	xxxxx								
SharedQueue:	xxxxx	xxxx	xxxxx	0.0	xxxx	xxxxx	xxxxx	xxxx	xxxxx	xxxxx	0.1	xxxxx								
Shrd StpDel:	xxxxx	xxxx	xxxxx	7.3	xxxx	xxxxx	xxxxx	xxxx	xxxxx	xxxxx	9.1	xxxxx								
Shared LOS:	*	*	*	A	*	*	*	*	*	*	A	*								
ApproachDel:	xxxxxx			xxxxxx			9.7			9.1										
ApproachLOS:	*			*			A			A										

Wilson Creek Estates
Traffic Impact Analysis

Level Of Service Computation Report
2000 HCM Unsignalized Method (Future Volume Alternative)

Intersection #11 Oak Glen Rd & O St

Average Delay (sec/veh): 1.6 Worst Case Level Of Service: A[8.6]

Approach:	North Bound				South Bound				East Bound				West Bound			
Movement:	L	- T	- R		L	- T	- R		L	- T	- R		L	- T	- R	
Control:	Stop Sign				Stop Sign				Uncontrolled				Uncontrolled			
Rights:	Include				Include				Include				Include			
Lanes:	0	0	1!	0 0	0	0	0	0 1	0	1	0	0 0	0	0	1	0 0
Volume Module:																
Base Vol:	0	0	0	0	0	0	0	0	0	70	0	0	0	69	0	
Growth Adj:	1.00	1.00	1.00	1.00	1.00	1.00	1.00	1.00	1.00	1.00	1.00	1.00	1.00	1.00	1.00	
Initial Bse:	0	0	0	0	0	0	0	0	0	70	0	0	0	69	0	
Added Vol:	0	0	0	0	0	0	13	0	23	0	0	0	0	0	0	
PasserByVol:	0	0	0	0	0	0	0	0	0	0	0	0	0	0	0	
Initial Fut:	0	0	0	0	0	0	13	0	23	0	70	0	0	69	0	
User Adj:	1.00	1.00	1.00	1.00	1.00	1.00	1.00	1.00	1.00	1.00	1.00	1.00	1.00	1.00	1.00	
PHF Adj:	1.00	1.00	1.00	1.00	1.00	1.00	1.00	1.00	1.00	1.00	1.00	1.00	1.00	1.00	1.00	
PHF Volume:	0	0	0	0	0	0	13	0	23	0	70	0	0	69	0	
Reduct Vol:	0	0	0	0	0	0	0	0	0	0	0	0	0	0	0	
Final Vol.:	0	0	0	0	0	0	13	0	23	0	70	0	0	69	0	
Critical Gap Module:																
Critical Gp:	xxxxx	xxxx	xxxxx	xxxxx	xxxx		6.2		4.1	xxxx	xxxxx	xxxxx	xxxx	xxxxx		
FollowUpTim:	xxxxx	xxxx	xxxxx	xxxxx	xxxx		3.3		2.2	xxxx	xxxxx	xxxxx	xxxx	xxxxx		
Capacity Module:																
Cnflict Vol:	xxxx	xxxx	xxxxx	xxxx	xxxx		69		69	xxxx	xxxxx	xxxx	xxxx	xxxxx		
Potent Cap.:	xxxx	xxxx	xxxxx	xxxx	xxxx		1000		1545	xxxx	xxxxx	xxxx	xxxx	xxxxx		
Move Cap.:	xxxx	xxxx	xxxxx	xxxx	xxxx		1000		1545	xxxx	xxxxx	xxxx	xxxx	xxxxx		
Volume/Cap:	xxxx	xxxx	xxxx	xxxx	xxxx		0.01		0.01	xxxx	xxxx	xxxx	xxxx	xxxx		
Level Of Service Module:																
Queue:	xxxxx	xxxx	xxxxx	xxxxx	xxxx		0.0		0.0	xxxx	xxxxx	xxxxx	xxxx	xxxxx		
Stopped Del:	xxxxx	xxxx	xxxxx	xxxxx	xxxx		8.6		7.4	xxxx	xxxxx	xxxxx	xxxx	xxxxx		
LOS by Move:	*	*	*	*	*		A		A	*	*	*	*	*		
Movement:	LT -	LTR -	RT	LT -	LTR -	RT	LT -	LTR -	RT	LT -	LTR -	RT	LT -	LTR -	RT	
Shared Cap.:	xxxx	0	xxxxx	xxxx	xxxx	xxxxx	xxxx	xxxx	xxxxx	xxxx	xxxx	xxxxx				
SharedQueue:	xxxxx	xxxx	xxxxx	xxxxx	xxxx	xxxxx	0.0	xxxx	xxxxx	xxxxx	xxxx	xxxxx				
Shrd StpDel:	xxxxx	xxxx	xxxxx	xxxxx	xxxx	xxxxx	7.4	xxxx	xxxxx	xxxxx	xxxx	xxxxx				
Shared LOS:	*	*	*	*	*	*	A	*	*	*	*	*				
ApproachDel:	xxxxxx			8.6			xxxxxx			xxxxxx						
ApproachLOS:	*			A			*			*						

APPENDIX D

INTERSECTION ANALYSIS WORKSHEETS

LONG TERM (2040) NO BUILD CONDITIONS

Wilson Creek Estates
Traffic Impact Analysis

Level Of Service Computation Report
2000 HCM Operations Method (Base Volume Alternative)

Intersection #1 Oak Glen Rd & Bryant St

Cycle (sec): 60 Critical Vol./Cap. (X): 0.649
Loss Time (sec): 4 (Y+R = 4 sec) Average Delay (sec/veh): 18.6
Optimal Cycle:OPTIMIZED Level Of Service: B

Approach:	North Bound			South Bound			East Bound			West Bound		
Movement:	L - T - R			L - T - R			L - T - R			L - T - R		
Control:	Protected			Protected			Protected			Protected		
Rights:	Include			Include			Include			Include		
Min. Green:	0	0	0	0	0	0	0	0	0	0	0	0
Lanes:	1 0 2 0 1			1 0 2 0 1			1 0 1 0 1			1 0 1 0 1		
Volume Module:												
Base Vol:	274	537	79	46	530	385	175	131	231	67	293	74
Growth Adj:	1.00	1.00	1.00	1.00	1.00	1.00	1.00	1.00	1.00	1.00	1.00	1.00
Initial Bse:	274	537	79	46	530	385	175	131	231	67	293	74
User Adj:	1.00	1.00	1.00	1.00	1.00	1.00	1.00	1.00	1.00	1.00	1.00	1.00
PHF Adj:	1.00	1.00	1.00	1.00	1.00	1.00	1.00	1.00	1.00	1.00	1.00	1.00
PHF Volume:	274	537	79	46	530	385	175	131	231	67	293	74
Reduct Vol:	0	0	0	0	0	0	0	0	0	0	0	0
Reduced Vol:	274	537	79	46	530	385	175	131	231	67	293	74
PCE Adj:	1.00	1.00	1.00	1.00	1.00	1.00	1.00	1.00	1.00	1.00	1.00	1.00
MLF Adj:	1.00	1.00	1.00	1.00	1.00	1.00	1.00	1.00	1.00	1.00	1.00	1.00
Final Vol.:	274	537	79	46	530	385	175	131	231	67	293	74
Saturation Flow Module:												
Sat/Lane:	1900	1900	1900	1900	1900	1900	1900	1900	1900	1900	1900	1900
Adjustment:	0.95	0.95	1.00	0.95	0.95	1.00	0.95	1.00	1.00	0.95	1.00	1.00
Lanes:	1.00	2.00	1.00	1.00	2.00	1.00	1.00	1.00	1.00	1.00	1.00	1.00
Final Sat.:	1805	3610	1900	1805	3610	1900	1805	1900	1900	1805	1900	1900
Capacity Analysis Module:												
Vol/Sat:	0.15	0.15	0.04	0.03	0.15	0.20	0.10	0.07	0.12	0.04	0.15	0.04
Crit Moves:	****					****	****				****	
Green/Cycle:	0.23	0.47	0.47	0.08	0.31	0.31	0.15	0.30	0.30	0.09	0.24	0.24
Volume/Cap:	0.65	0.32	0.09	0.32	0.47	0.65	0.65	0.23	0.41	0.41	0.65	0.16
Delay/Veh:	24.3	10.1	9.0	27.3	16.9	20.3	29.5	16.2	17.4	27.4	23.9	18.3
User DelAdj:	1.00	1.00	1.00	1.00	1.00	1.00	1.00	1.00	1.00	1.00	1.00	1.00
AdjDel/Veh:	24.3	10.1	9.0	27.3	16.9	20.3	29.5	16.2	17.4	27.4	23.9	18.3
HCM2kAvg:	6	3	1	1	4	7	4	2	4	2	6	1

Wilson Creek Estates
Traffic Impact Analysis

Level Of Service Computation Report
2000 HCM Operations Method (Base Volume Alternative)

Intersection #2 Bryant St & Fir Ave

Cycle (sec): 60 Critical Vol./Cap. (X): 0.522
Loss Time (sec): 4 (Y+R = 4 sec) Average Delay (sec/veh): 12.4
Optimal Cycle:OPTIMIZED Level Of Service: B

Approach:	North Bound			South Bound			East Bound			West Bound		
Movement:	L - T - R			L - T - R			L - T - R			L - T - R		
Control:	Permitted			Permitted			Permitted			Permitted		
Rights:	Include			Include			Include			Include		
Min. Green:	0	0	0	0	0	0	0	0	0	0	0	0
Lanes:	1 0 2	0 1		1 0 1	1 0		0 0 1!	0 0		0 0 1!	0 0	
Volume Module:												
Base Vol:	356	475	17	6	568	26	89	23	434	52	24	12
Growth Adj:	1.00	1.00	1.00	1.00	1.00	1.00	1.00	1.00	1.00	1.00	1.00	1.00
Initial Bse:	356	475	17	6	568	26	89	23	434	52	24	12
User Adj:	1.00	1.00	1.00	1.00	1.00	1.00	1.00	1.00	1.00	1.00	1.00	1.00
PHF Adj:	1.00	1.00	1.00	1.00	1.00	1.00	1.00	1.00	1.00	1.00	1.00	1.00
PHF Volume:	356	475	17	6	568	26	89	23	434	52	24	12
Reduct Vol:	0	0	0	0	0	0	0	0	0	0	0	0
Reduced Vol:	356	475	17	6	568	26	89	23	434	52	24	12
PCE Adj:	1.00	1.00	1.00	1.00	1.00	1.00	1.00	1.00	1.00	1.00	1.00	1.00
MLF Adj:	1.00	1.00	1.00	1.00	1.00	1.00	1.00	1.00	1.00	1.00	1.00	1.00
Final Vol.:	356	475	17	6	568	26	89	23	434	52	24	12
Saturation Flow Module:												
Sat/Lane:	1900	1900	1900	1900	1900	1900	1900	1900	1900	1900	1900	1900
Adjustment:	0.95	0.95	1.00	0.95	0.95	0.95	0.95	1.00	1.00	0.95	1.00	1.00
Lanes:	1.00	2.00	1.00	1.00	1.91	0.09	0.17	0.04	0.79	0.61	0.26	0.13
Final Sat.:	1805	3610	1900	1805	3452	158	307	79	1497	1089	503	251
Capacity Analysis Module:												
Vol/Sat:	0.20	0.13	0.01	0.00	0.16	0.16	0.29	0.29	0.29	0.05	0.05	0.05
Crit Moves:	****							****				
Green/Cycle:	0.38	0.38	0.38	0.38	0.38	0.38	0.56	0.56	0.56	0.56	0.56	0.56
Volume/Cap:	0.52	0.35	0.02	0.01	0.44	0.44	0.52	0.52	0.52	0.09	0.09	0.09
Delay/Veh:	15.2	13.5	11.7	11.7	14.1	14.1	8.8	8.8	8.8	6.3	6.3	6.3
User DelAdj:	1.00	1.00	1.00	1.00	1.00	1.00	1.00	1.00	1.00	1.00	1.00	1.00
AdjDel/Veh:	15.2	13.5	11.7	11.7	14.1	14.1	8.8	8.8	8.8	6.3	6.3	6.3
HCM2kAvg:	6	3	0	0	4	4	7	7	7	1	1	1

Wilson Creek Estates
Traffic Impact Analysis

Level Of Service Computation Report
2000 HCM Unsignalized Method (Base Volume Alternative)

Intersection #3 Bryant St & Carter St

Average Delay (sec/veh): 4.2 Worst Case Level Of Service: E[36.0]

Approach:	North Bound			South Bound			East Bound			West Bound		
Movement:	L	T	R	L	T	R	L	T	R	L	T	R
Control:	Uncontrolled			Uncontrolled			Stop Sign			Stop Sign		
Rights:	Include			Include			Include			Include		
Lanes:	1 0 0 1 0			1 0 0 1 0			0 0 1! 0 0			0 0 1! 0 0		
Volume Module:												
Base Vol:	8	606	45	3	446	3	12	0	24	77	0	50
Growth Adj:	1.00	1.00	1.00	1.00	1.00	1.00	1.00	1.00	1.00	1.00	1.00	1.00
Initial Bse:	8	606	45	3	446	3	12	0	24	77	0	50
User Adj:	1.00	1.00	1.00	1.00	1.00	1.00	1.00	1.00	1.00	1.00	1.00	1.00
PHF Adj:	1.00	1.00	1.00	1.00	1.00	1.00	1.00	1.00	1.00	1.00	1.00	1.00
PHF Volume:	8	606	45	3	446	3	12	0	24	77	0	50
Reduct Vol:	0	0	0	0	0	0	0	0	0	0	0	0
Final Vol.:	8	606	45	3	446	3	12	0	24	77	0	50
Critical Gap Module:												
Critical Gp:	4.1	xxxx	xxxxx	4.1	xxxx	xxxxx	7.1	xxxx	6.2	7.1	xxxx	6.2
FollowUpTim:	2.2	xxxx	xxxxx	2.2	xxxx	xxxxx	3.5	xxxx	3.3	3.5	xxxx	3.3
Capacity Module:												
Cnflict Vol:	449	xxxx	xxxxx	651	xxxx	xxxxx	1123	xxxx	447	1110	xxxx	629
Potent Cap.:	1122	xxxx	xxxxx	945	xxxx	xxxxx	185	xxxx	615	188	xxxx	486
Move Cap.:	1122	xxxx	xxxxx	945	xxxx	xxxxx	164	xxxx	615	180	xxxx	486
Volume/Cap:	0.01	xxxx	xxxx	0.00	xxxx	xxxx	0.07	xxxx	0.04	0.43	xxxx	0.10
Level Of Service Module:												
Queue:	0.0	xxxx	xxxxx	0.0	xxxx	xxxxx	xxxxx	xxxx	xxxxx	xxxxx	xxxx	xxxxx
Stopped Del:	8.2	xxxx	xxxxx	8.8	xxxx	xxxxx	xxxxx	xxxx	xxxxx	xxxxx	xxxx	xxxxx
LOS by Move:	A	*	*	A	*	*	*	*	*	*	*	*
Movement:	LT	LTR	RT	LT	LTR	RT	LT	LTR	RT	LT	LTR	RT
Shared Cap.:	xxxx	xxxx	xxxxx	xxxx	xxxx	xxxxx	xxxx	321	xxxxx	xxxx	239	xxxxx
SharedQueue:	xxxxx	xxxx	xxxxx	xxxxx	xxxx	xxxxx	xxxxx	0.4	xxxxx	xxxxx	2.8	xxxxx
Shrd StpDel:	xxxxx	xxxx	xxxxx	xxxxx	xxxx	xxxxx	xxxxx	17.6	xxxxx	xxxxx	36.0	xxxxx
Shared LOS:	*	*	*	*	*	*	*	C	*	*	E	*
ApproachDel:	xxxxxx			xxxxxx			17.6			36.0		
ApproachLOS:	*			*			C			E		

Wilson Creek Estates
Traffic Impact Analysis

Level Of Service Computation Report
2000 HCM Unsignalized Method (Base Volume Alternative)

Intersection #4 Carter St & Jefferson St

Average Delay (sec/veh): 1.7 Worst Case Level Of Service: A[9.2]

Approach:	North Bound					South Bound					East Bound					West Bound				
Movement:	L	-	T	-	R	L	-	T	-	R	L	-	T	-	R	L	-	T	-	R
Control:	Stop Sign					Stop Sign					Uncontrolled					Uncontrolled				
Rights:	Include					Include					Include					Include				
Lanes:	0	0	1	0	0	1	0	0	0	0	0	1	0	0	0	0	0	1	0	0
Volume Module:																				
Base Vol:	0	2	0	3	0	0	2	12	0	0	15	0								
Growth Adj:	1.00	1.00	1.00	1.00	1.00	1.00	1.00	1.00	1.00	1.00	1.00	1.00								
Initial Bse:	0	2	0	3	0	0	2	12	0	0	15	0								
User Adj:	1.00	1.00	1.00	1.00	1.00	1.00	1.00	1.00	1.00	1.00	1.00	1.00								
PHF Adj:	1.00	1.00	1.00	1.00	1.00	1.00	1.00	1.00	1.00	1.00	1.00	1.00								
PHF Volume:	0	2	0	3	0	0	2	12	0	0	15	0								
Reduct Vol:	0	0	0	0	0	0	0	0	0	0	0	0								
Final Vol.:	0	2	0	3	0	0	2	12	0	0	15	0								
Critical Gap Module:																				
Critical Gp:	xxxxx	6.5	xxxxx	7.1	xxxx	xxxxx	4.1	xxxx	xxxxx	xxxxx	xxxx	xxxxx								
FollowUpTim:	xxxxx	4.0	xxxxx	3.5	xxxx	xxxxx	2.2	xxxx	xxxxx	xxxxx	xxxx	xxxxx								
Capacity Module:																				
Cnflict Vol:	xxxx	31	xxxxx	32	xxxx	xxxxx	15	xxxx	xxxxx	xxxx	xxxx	xxxxx								
Potent Cap.:	xxxx	866	xxxxx	981	xxxx	xxxxx	1616	xxxx	xxxxx	xxxx	xxxx	xxxxx								
Move Cap.:	xxxx	865	xxxxx	978	xxxx	xxxxx	1616	xxxx	xxxxx	xxxx	xxxx	xxxxx								
Volume/Cap:	xxxx	0.00	xxxx	0.00	xxxx	xxxx	0.00	xxxx	xxxx	xxxx	xxxx	xxxx								
Level Of Service Module:																				
Queue:	xxxxx	0.0	xxxxx	0.0	xxxx	xxxxx	0.0	xxxx	xxxxx	xxxxx	xxxx	xxxxx								
Stopped Del:	xxxxx	9.2	xxxxx	8.7	xxxx	xxxxx	7.2	xxxx	xxxxx	xxxxx	xxxx	xxxxx								
LOS by Move:	*	A	*	A	*	*	A	*	*	*	*	*								
Movement:	LT	-	LTR	-	RT	LT	-	LTR	-	RT	LT	-	LTR	-	RT	LT	-	LTR	-	RT
Shared Cap.:	xxxx	xxxx	xxxxx	xxxx	xxxx	xxxxx	xxxx	xxxx	xxxxx	xxxx	xxxx	xxxxx								
SharedQueue:	xxxxx	xxxx	xxxxx	xxxxx	xxxx	xxxxx	0.0	xxxx	xxxxx	xxxxx	xxxx	xxxxx								
Shrd StpDel:	xxxxx	xxxx	xxxxx	xxxxx	xxxx	xxxxx	7.2	xxxx	xxxxx	xxxxx	xxxx	xxxxx								
Shared LOS:	*	*	*	*	*	*	A	*	*	*	*	*								
ApproachDel:	9.2			8.7			xxxxxx			xxxxxx										
ApproachLOS:	A			A			*			*										

Wilson Creek Estates
Traffic Impact Analysis

Level Of Service Computation Report
2000 HCM Unsignalized Method (Base Volume Alternative)

Intersection #5 Oak Glen Rd & Pendleton Rd

Average Delay (sec/veh): 1.2 Worst Case Level Of Service: A[10.0]

Approach:	North Bound			South Bound			East Bound			West Bound		
Movement:	L - T - R			L - T - R			L - T - R			L - T - R		
Control:	Stop Sign			Stop Sign			Uncontrolled			Uncontrolled		
Rights:	Include			Include			Include			Include		
Lanes:	0 0 1! 0 0			0 0 1! 0 0			0 0 0 1 0			0 0 1 0 0		
Volume Module:												
Base Vol:	33	0	5	0	0	0	0	77	13	0	176	0
Growth Adj:	1.00	1.00	1.00	1.00	1.00	1.00	1.00	1.00	1.00	1.00	1.00	1.00
Initial Bse:	33	0	5	0	0	0	0	77	13	0	176	0
User Adj:	1.00	1.00	1.00	1.00	1.00	1.00	1.00	1.00	1.00	1.00	1.00	1.00
PHF Adj:	1.00	1.00	1.00	1.00	1.00	1.00	1.00	1.00	1.00	1.00	1.00	1.00
PHF Volume:	33	0	5	0	0	0	0	77	13	0	176	0
Reduct Vol:	0	0	0	0	0	0	0	0	0	0	0	0
Final Vol.:	33	0	5	0	0	0	0	77	13	0	176	0
Critical Gap Module:												
Critical Gp:	6.4	xxxx	6.2	xxxxx	xxxx	xxxxx	xxxxx	xxxx	xxxxx	xxxxx	xxxx	xxxxx
FollowUpTim:	3.5	xxxx	3.3	xxxxx	xxxx	xxxxx	xxxxx	xxxx	xxxxx	xxxxx	xxxx	xxxxx
Capacity Module:												
Cnflict Vol:	260	xxxx	84	xxxx	xxxx	xxxxx	xxxx	xxxx	xxxxx	xxxx	xxxx	xxxxx
Potent Cap.:	734	xxxx	981	xxxx	xxxx	xxxxx	xxxx	xxxx	xxxxx	xxxx	xxxx	xxxxx
Move Cap.:	734	xxxx	981	xxxx	xxxx	xxxxx	xxxx	xxxx	xxxxx	xxxx	xxxx	xxxxx
Volume/Cap:	0.04	xxxx	0.01	xxxx	xxxx	xxxx	xxxx	xxxx	xxxx	xxxx	xxxx	xxxx
Level Of Service Module:												
Queue:	xxxxx	xxxx	xxxxx	xxxxx	xxxx	xxxxx	xxxxx	xxxx	xxxxx	xxxxx	xxxx	xxxxx
Stopped Del:	xxxxx	xxxx	xxxxx	xxxxx	xxxx	xxxxx	xxxxx	xxxx	xxxxx	xxxxx	xxxx	xxxxx
LOS by Move:	*	*	*	*	*	*	*	*	*	*	*	*
Movement:	LT - LTR - RT			LT - LTR - RT			LT - LTR - RT			LT - LTR - RT		
Shared Cap.:	xxxx	759	xxxxx	xxxx	0	xxxxx	xxxx	xxxx	xxxxx	xxxx	xxxx	xxxxx
SharedQueue:	xxxxx	0.2	xxxxx	xxxxx	xxxx	xxxxx	xxxxx	xxxx	xxxxx	xxxxx	xxxx	xxxxx
Shrd StpDel:	xxxxx	10.0	xxxxx	xxxxx	xxxx	xxxxx	xxxxx	xxxx	xxxxx	xxxxx	xxxx	xxxxx
Shared LOS:	*	A	*	*	*	*	*	*	*	*	*	*
ApproachDel:		10.0		xxxxxx			xxxxxx			xxxxxx		
ApproachLOS:		A		*			*			*		

Wilson Creek Estates
Traffic Impact Analysis

Level Of Service Computation Report
2000 HCM Unsignalized Method (Base Volume Alternative)

Intersection #6 Oak Glen Rd & Casa Blance Rd

Average Delay (sec/veh): 2.2 Worst Case Level Of Service: A[9.8]

Approach:	North Bound					South Bound					East Bound					West Bound				
Movement:	L	-	T	-	R	L	-	T	-	R	L	-	T	-	R	L	-	T	-	R
Control:	Stop Sign					Stop Sign					Uncontrolled					Uncontrolled				
Rights:	Include					Include					Include					Include				
Lanes:	1	0	0	0	0	0	0	1!	0	0	0	0	0	1	0	0	0	1	0	0
Volume Module:																				
Base Vol:	56		0		0	0		0		0	0		66		15	0		119		0
Growth Adj:	1.00	1.00	1.00	1.00	1.00	1.00	1.00	1.00	1.00	1.00	1.00	1.00	1.00	1.00	1.00	1.00	1.00	1.00	1.00	1.00
Initial Bse:	56		0		0	0		0		0	0		66		15	0		119		0
User Adj:	1.00	1.00	1.00	1.00	1.00	1.00	1.00	1.00	1.00	1.00	1.00	1.00	1.00	1.00	1.00	1.00	1.00	1.00	1.00	1.00
PHF Adj:	1.00	1.00	1.00	1.00	1.00	1.00	1.00	1.00	1.00	1.00	1.00	1.00	1.00	1.00	1.00	1.00	1.00	1.00	1.00	1.00
PHF Volume:	56		0		0	0		0		0	0		66		15	0		119		0
Reduct Vol:	0		0		0	0		0		0	0		0		0	0		0		0
Final Vol.:	56		0		0	0		0		0	0		66		15	0		119		0
Critical Gap Module:																				
Critical Gp:	6.4	xxxx	xxxxx	xxxxx	xxxx	xxxxx	xxxxx	xxxx	xxxxx	xxxxx	xxxx	xxxxx								
FollowUpTim:	3.5	xxxx	xxxxx	xxxxx	xxxx	xxxxx	xxxxx	xxxx	xxxxx	xxxxx	xxxx	xxxxx								
Capacity Module:																				
Cnflict Vol:	193	xxxx	xxxxx	xxxx	xxxx	xxxxx	xxxx	xxxx	xxxxx	xxxx	xxxx	xxxxx								
Potent Cap.:	801	xxxx	xxxxx	xxxx	xxxx	xxxxx	xxxx	xxxx	xxxxx	xxxx	xxxx	xxxxx								
Move Cap.:	801	xxxx	xxxxx	xxxx	xxxx	xxxxx	xxxx	xxxx	xxxxx	xxxx	xxxx	xxxxx								
Volume/Cap:	0.07	xxxx	xxxx	xxxx	xxxx	xxxx	xxxx	xxxx	xxxx	xxxx	xxxx	xxxx								
Level Of Service Module:																				
Queue:	0.2	xxxx	xxxxx	xxxxx	xxxx	xxxxx	xxxxx	xxxx	xxxxx	xxxxx	xxxx	xxxxx								
Stopped Del:	9.8	xxxx	xxxxx	xxxxx	xxxx	xxxxx	xxxxx	xxxx	xxxxx	xxxxx	xxxx	xxxxx								
LOS by Move:	A	*	*	*	*	*	*	*	*	*	*	*								
Movement:	LT	-	LTR	-	RT	LT	-	LTR	-	RT	LT	-	LTR	-	RT	LT	-	LTR	-	RT
Shared Cap.:	xxxx	xxxx	xxxxx	xxxx	0	xxxxx	xxxx	xxxx	xxxxx	xxxx	xxxx	xxxxx								
SharedQueue:	xxxxx	xxxx	xxxxx	xxxxx	xxxx	xxxxx	xxxxx	xxxx	xxxxx	xxxxx	xxxx	xxxxx								
Shrd StpDel:	xxxxx	xxxx	xxxxx	xxxxx	xxxx	xxxxx	xxxxx	xxxx	xxxxx	xxxxx	xxxx	xxxxx								
Shared LOS:	*	*	*	*	*	*	*	*	*	*	*	*								
ApproachDel:	9.8			xxxxxx			xxxxxx				xxxxxx									
ApproachLOS:	A			*			*				*									

Wilson Creek Estates
Traffic Impact Analysis

Level Of Service Computation Report
2000 HCM Unsignalized Method (Base Volume Alternative)

Intersection #7 Oak Glen Rd & Cherry Croft Rd

Average Delay (sec/veh): 0.1 Worst Case Level Of Service: A[9.4]

Approach:	North Bound					South Bound					East Bound					West Bound				
Movement:	L	-	T	-	R	L	-	T	-	R	L	-	T	-	R	L	-	T	-	R
Control:	Stop Sign					Stop Sign					Uncontrolled					Uncontrolled				
Rights:	Include					Include					Include					Include				
Lanes:	0	0	0	0	0	0	0	0	0	1	1	0	1	0	0	0	0	1	0	0
Volume Module:																				
Base Vol:	0	0	0	0	0	2	0	90	0	0	216	0								
Growth Adj:	1.00	1.00	1.00	1.00	1.00	1.00	1.00	1.00	1.00	1.00	1.00	1.00								
Initial Bse:	0	0	0	0	0	2	0	90	0	0	216	0								
User Adj:	1.00	1.00	1.00	1.00	1.00	1.00	1.00	1.00	1.00	1.00	1.00	1.00								
PHF Adj:	1.00	1.00	1.00	1.00	1.00	1.00	1.00	1.00	1.00	1.00	1.00	1.00								
PHF Volume:	0	0	0	0	0	2	0	90	0	0	216	0								
Reduct Vol:	0	0	0	0	0	0	0	0	0	0	0	0								
Final Vol.:	0	0	0	0	0	2	0	90	0	0	216	0								
Critical Gap Module:																				
Critical Gp:	xxxxx	xxxx	xxxxx	xxxxx	xxxx	6.2	xxxxx	xxxx	xxxxx	xxxxx	xxxx	xxxxx								
FollowUpTim:	xxxxx	xxxx	xxxxx	xxxxx	xxxx	3.3	xxxxx	xxxx	xxxxx	xxxxx	xxxx	xxxxx								
Capacity Module:																				
Cnflict Vol:	xxxx	xxxx	xxxxx	xxxx	xxxx	216	xxxx	xxxx	xxxxx	xxxx	xxxx	xxxxx								
Potent Cap.:	xxxx	xxxx	xxxxx	xxxx	xxxx	829	xxxx	xxxx	xxxxx	xxxx	xxxx	xxxxx								
Move Cap.:	xxxx	xxxx	xxxxx	xxxx	xxxx	829	xxxx	xxxx	xxxxx	xxxx	xxxx	xxxxx								
Volume/Cap:	xxxx	xxxx	xxxx	xxxx	xxxx	0.00	xxxx	xxxx	xxxx	xxxx	xxxx	xxxx								
Level Of Service Module:																				
Queue:	xxxxx	xxxx	xxxxx	xxxxx	xxxx	0.0	xxxxx	xxxx	xxxxx	xxxxx	xxxx	xxxxx								
Stopped Del:	xxxxx	xxxx	xxxxx	xxxxx	xxxx	9.4	xxxxx	xxxx	xxxxx	xxxxx	xxxx	xxxxx								
LOS by Move:	*	*	*	*	*	A	*	*	*	*	*	*								
Movement:	LT	-	LTR	-	RT	LT	-	LTR	-	RT	LT	-	LTR	-	RT	LT	-	LTR	-	RT
Shared Cap.:	xxxx	xxxx	xxxxx	xxxx	xxxx	xxxxx	xxxx	xxxx	xxxxx	xxxx	xxxx	xxxxx								
SharedQueue:	xxxxx	xxxx	xxxxx	xxxxx	xxxx	xxxxx	xxxxx	xxxx	xxxxx	xxxxx	xxxx	xxxxx								
Shrd StpDel:	xxxxx	xxxx	xxxxx	xxxxx	xxxx	xxxxx	xxxxx	xxxx	xxxxx	xxxxx	xxxx	xxxxx								
Shared LOS:	*	*	*	*	*	*	*	*	*	*	*	*								
ApproachDel:	xxxxxx					9.4	xxxxxx					xxxxxx								
ApproachLOS:	*					A	*					*								

Wilson Creek Estates
Traffic Impact Analysis

Level Of Service Computation Report
2000 HCM Unsignalized Method (Base Volume Alternative)

Intersection #8 Pendleton Rd & Date Ave

Average Delay (sec/veh): 4.9 Worst Case Level Of Service: A[8.4]

Approach:	North Bound					South Bound					East Bound					West Bound				
Movement:	L	-	T	-	R	L	-	T	-	R	L	-	T	-	R	L	-	T	-	R
Control:	Uncontrolled					Uncontrolled					Stop Sign					Stop Sign				
Rights:	Include					Include					Include					Include				
Lanes:	0	1	0	0	0	0	0	0	0	1	0	0	1!	0	0	0	0	1!	0	0
Volume Module:																				
Base Vol:	3	2	0	0	0	0	0	0	0	20	27	0	2	0	0	0	0	0	0	0
Growth Adj:	1.00	1.00	1.00	1.00	1.00	1.00	1.00	1.00	1.00	1.00	1.00	1.00	1.00	1.00	1.00	1.00	1.00	1.00	1.00	1.00
Initial Bse:	3	2	0	0	0	0	0	0	0	20	27	0	2	0	0	0	0	0	0	0
User Adj:	1.00	1.00	1.00	1.00	1.00	1.00	1.00	1.00	1.00	1.00	1.00	1.00	1.00	1.00	1.00	1.00	1.00	1.00	1.00	1.00
PHF Adj:	1.00	1.00	1.00	1.00	1.00	1.00	1.00	1.00	1.00	1.00	1.00	1.00	1.00	1.00	1.00	1.00	1.00	1.00	1.00	1.00
PHF Volume:	3	2	0	0	0	0	0	0	0	20	27	0	2	0	0	0	0	0	0	0
Reduct Vol:	0	0	0	0	0	0	0	0	0	0	0	0	0	0	0	0	0	0	0	0
Final Vol.:	3	2	0	0	0	0	0	0	0	20	27	0	2	0	0	0	0	0	0	0
Critical Gap Module:																				
Critical Gp:	4.1	xxxx	xxxxx	xxxxx	xxxx	xxxxx					6.4	xxxx			6.2	xxxxx	xxxx	xxxxx		
FollowUpTim:	2.2	xxxx	xxxxx	xxxxx	xxxx	xxxxx					3.5	xxxx			3.3	xxxxx	xxxx	xxxxx		
Capacity Module:																				
Cnflict Vol:	20	xxxx	xxxxx		xxxx	xxxx	xxxxx				8	xxxx			0		xxxx	xxxx	xxxxx	
Potent Cap.:	1609	xxxx	xxxxx		xxxx	xxxx	xxxxx				1018	xxxx			0		xxxx	xxxx	xxxxx	
Move Cap.:	1609	xxxx	xxxxx		xxxx	xxxx	xxxxx				1017	xxxx			0		xxxx	xxxx	xxxxx	
Volume/Cap:	0.00	xxxx	xxxx		xxxx	xxxx	xxxx				0.03	xxxx		0.00			xxxx	xxxx	xxxx	
Level Of Service Module:																				
Queue:	0.0	xxxx	xxxxx	xxxxx	xxxx	xxxxx	xxxxx	xxxx	xxxxx	xxxxx	xxxx	xxxxx								
Stopped Del:	7.2	xxxx	xxxxx	xxxxx	xxxx	xxxxx	xxxxx	xxxx	xxxxx	xxxxx	xxxx	xxxxx								
LOS by Move:	A	*	*	*	*	*	*	*	*	*	*	*								
Movement:	LT	-	LTR	-	RT	LT	-	LTR	-	RT	LT	-	LTR	-	RT	LT	-	LTR	-	RT
Shared Cap.:	xxxx	xxxx	xxxxx		xxxx	xxxx	xxxxx				xxxx	1092	xxxxx			xxxx		0	xxxxx	
SharedQueue:	0.0	xxxx	xxxxx	xxxxx	xxxx	xxxxx	xxxxx				0.1	xxxxx	xxxxx	xxxx	xxxxx					
Shrd StpDel:	7.2	xxxx	xxxxx	xxxxx	xxxx	xxxxx	xxxxx				8.4	xxxxx	xxxxx	xxxx	xxxxx					
Shared LOS:	A	*	*	*	*	*	*				A	*	*	*	*					
ApproachDel:	xxxxxx					xxxxxx					8.4					xxxxxx				
ApproachLOS:	*					*					A					*				

Wilson Creek Estates
Traffic Impact Analysis

Level Of Service Computation Report
2000 HCM Operations Method (Base Volume Alternative)

Intersection #1 Oak Glen Rd & Bryant St

Cycle (sec): 60 Critical Vol./Cap. (X): 0.400
Loss Time (sec): 4 (Y+R = 4 sec) Average Delay (sec/veh): 17.9
Optimal Cycle:OPTIMIZED Level Of Service: B

Approach:	North Bound			South Bound			East Bound			West Bound		
Movement:	L - T - R			L - T - R			L - T - R			L - T - R		
Control:	Protected			Protected			Protected			Protected		
Rights:	Include			Include			Include			Include		
Min. Green:	0	0	0	0	0	0	0	0	0	0	0	0
Lanes:	1 0 2 0 1			1 0 2 0 1			1 0 1 0 1			1 0 1 0 1		
Volume Module:												
Base Vol:	151	305	71	61	392	172	237	148	194	71	94	96
Growth Adj:	1.00	1.00	1.00	1.00	1.00	1.00	1.00	1.00	1.00	1.00	1.00	1.00
Initial Bse:	151	305	71	61	392	172	237	148	194	71	94	96
User Adj:	1.00	1.00	1.00	1.00	1.00	1.00	1.00	1.00	1.00	1.00	1.00	1.00
PHF Adj:	1.00	1.00	1.00	1.00	1.00	1.00	1.00	1.00	1.00	1.00	1.00	1.00
PHF Volume:	151	305	71	61	392	172	237	148	194	71	94	96
Reduct Vol:	0	0	0	0	0	0	0	0	0	0	0	0
Reduced Vol:	151	305	71	61	392	172	237	148	194	71	94	96
PCE Adj:	1.00	1.00	1.00	1.00	1.00	1.00	1.00	1.00	1.00	1.00	1.00	1.00
MLF Adj:	1.00	1.00	1.00	1.00	1.00	1.00	1.00	1.00	1.00	1.00	1.00	1.00
Final Vol.:	151	305	71	61	392	172	237	148	194	71	94	96
Saturation Flow Module:												
Sat/Lane:	1900	1900	1900	1900	1900	1900	1900	1900	1900	1900	1900	1900
Adjustment:	0.95	0.95	1.00	0.95	0.95	1.00	0.95	1.00	1.00	0.95	1.00	1.00
Lanes:	1.00	2.00	1.00	1.00	2.00	1.00	1.00	1.00	1.00	1.00	1.00	1.00
Final Sat.:	1805	3610	1900	1805	3610	1900	1805	1900	1900	1805	1900	1900
Capacity Analysis Module:												
Vol/Sat:	0.08	0.08	0.04	0.03	0.11	0.09	0.13	0.08	0.10	0.04	0.05	0.05
Crit Moves:	****				****		****				****	
Green/Cycle:	0.21	0.34	0.34	0.14	0.27	0.27	0.33	0.33	0.33	0.13	0.12	0.12
Volume/Cap:	0.40	0.25	0.11	0.25	0.40	0.33	0.40	0.24	0.31	0.31	0.40	0.41
Delay/Veh:	21.2	14.2	13.5	23.6	18.1	17.9	16.0	15.0	15.4	24.7	25.3	25.4
User DelAdj:	1.00	1.00	1.00	1.00	1.00	1.00	1.00	1.00	1.00	1.00	1.00	1.00
AdjDel/Veh:	21.2	14.2	13.5	23.6	18.1	17.9	16.0	15.0	15.4	24.7	25.3	25.4
HCM2kAvg:	3	2	1	1	3	3	4	2	3	2	2	2

Wilson Creek Estates
Traffic Impact Analysis

Level Of Service Computation Report
2000 HCM Operations Method (Base Volume Alternative)

Intersection #2 Bryant St & Fir Ave

Cycle (sec): 60 Critical Vol./Cap. (X): 0.224
Loss Time (sec): 4 (Y+R = 4 sec) Average Delay (sec/veh): 3.3
Optimal Cycle:OPTIMIZED Level Of Service: A

Approach:	North Bound			South Bound			East Bound			West Bound		
Movement:	L - T - R			L - T - R			L - T - R			L - T - R		
Control:	Permitted			Permitted			Permitted			Permitted		
Rights:	Include			Include			Include			Include		
Min. Green:	0	0	0	0	0	0	0	0	0	0	0	0
Lanes:	1 0 2	0 1		1 0 1	1 0		0 0 1!	0 0		0 0 1!	0 0	
Volume Module:												
Base Vol:	45	530	49	5	607	24	15	6	43	30	2	5
Growth Adj:	1.00	1.00	1.00	1.00	1.00	1.00	1.00	1.00	1.00	1.00	1.00	1.00
Initial Bse:	45	530	49	5	607	24	15	6	43	30	2	5
User Adj:	1.00	1.00	1.00	1.00	1.00	1.00	1.00	1.00	1.00	1.00	1.00	1.00
PHF Adj:	1.00	1.00	1.00	1.00	1.00	1.00	1.00	1.00	1.00	1.00	1.00	1.00
PHF Volume:	45	530	49	5	607	24	15	6	43	30	2	5
Reduct Vol:	0	0	0	0	0	0	0	0	0	0	0	0
Reduced Vol:	45	530	49	5	607	24	15	6	43	30	2	5
PCE Adj:	1.00	1.00	1.00	1.00	1.00	1.00	1.00	1.00	1.00	1.00	1.00	1.00
MLF Adj:	1.00	1.00	1.00	1.00	1.00	1.00	1.00	1.00	1.00	1.00	1.00	1.00
Final Vol.:	45	530	49	5	607	24	15	6	43	30	2	5
Saturation Flow Module:												
Sat/Lane:	1900	1900	1900	1900	1900	1900	1900	1900	1900	1900	1900	1900
Adjustment:	0.95	0.95	1.00	0.95	0.95	0.95	0.95	1.00	1.00	0.95	1.00	1.00
Lanes:	1.00	2.00	1.00	1.00	1.92	0.08	0.24	0.09	0.67	0.82	0.05	0.13
Final Sat.:	1805	3610	1900	1805	3473	137	440	176	1261	1477	98	246
Capacity Analysis Module:												
Vol/Sat:	0.02	0.15	0.03	0.00	0.17	0.17	0.03	0.03	0.03	0.02	0.02	0.02
Crit Moves:					****			****				
Green/Cycle:	0.78	0.78	0.78	0.78	0.78	0.78	0.15	0.15	0.15	0.15	0.15	0.15
Volume/Cap:	0.03	0.19	0.03	0.00	0.22	0.22	0.22	0.22	0.22	0.13	0.13	0.13
Delay/Veh:	1.5	1.7	1.5	1.4	1.8	1.8	22.7	22.7	22.7	22.2	22.2	22.2
User DelAdj:	1.00	1.00	1.00	1.00	1.00	1.00	1.00	1.00	1.00	1.00	1.00	1.00
AdjDel/Veh:	1.5	1.7	1.5	1.4	1.8	1.8	22.7	22.7	22.7	22.2	22.2	22.2
HCM2kAvg:	0	1	0	0	2	2	1	1	1	1	1	1

Wilson Creek Estates
Traffic Impact Analysis

Level Of Service Computation Report
2000 HCM Unsignalized Method (Base Volume Alternative)

Intersection #3 Bryant St & Carter St

Average Delay (sec/veh): 2.5 Worst Case Level Of Service: D[31.5]

Approach:	North Bound			South Bound			East Bound			West Bound		
Movement:	L -	T -	R	L -	T -	R	L -	T -	R	L -	T -	R
Control:	Uncontrolled			Uncontrolled			Stop Sign			Stop Sign		
Rights:	Include			Include			Include			Include		
Lanes:	1 0 0	1 0		1 0 0	1 0		0 0 1!	0 0		0 0 1!	0 0	
Volume Module:												
Base Vol:	27	399	53	38	551	6	5	0	18	51	0	11
Growth Adj:	1.00	1.00	1.00	1.00	1.00	1.00	1.00	1.00	1.00	1.00	1.00	1.00
Initial Bse:	27	399	53	38	551	6	5	0	18	51	0	11
User Adj:	1.00	1.00	1.00	1.00	1.00	1.00	1.00	1.00	1.00	1.00	1.00	1.00
PHF Adj:	1.00	1.00	1.00	1.00	1.00	1.00	1.00	1.00	1.00	1.00	1.00	1.00
PHF Volume:	27	399	53	38	551	6	5	0	18	51	0	11
Reduct Vol:	0	0	0	0	0	0	0	0	0	0	0	0
Final Vol.:	27	399	53	38	551	6	5	0	18	51	0	11
Critical Gap Module:												
Critical Gp:	4.1	xxxx	xxxxx	4.1	xxxx	xxxxx	7.1	xxxx	6.2	7.1	xxxx	6.2
FollowUpTim:	2.2	xxxx	xxxxx	2.2	xxxx	xxxxx	3.5	xxxx	3.3	3.5	xxxx	3.3
Capacity Module:												
Cnflict Vol:	557	xxxx	xxxxx	452	xxxx	xxxxx	1115	xxxx	554	1119	xxxx	426
Potent Cap.:	1024	xxxx	xxxxx	1119	xxxx	xxxxx	187	xxxx	536	186	xxxx	633
Move Cap.:	1024	xxxx	xxxxx	1119	xxxx	xxxxx	175	xxxx	536	171	xxxx	633
Volume/Cap:	0.03	xxxx	xxxx	0.03	xxxx	xxxx	0.03	xxxx	0.03	0.30	xxxx	0.02
Level Of Service Module:												
Queue:	0.1	xxxx	xxxxx	0.1	xxxx	xxxxx	xxxxx	xxxx	xxxxx	xxxxx	xxxx	xxxxx
Stopped Del:	8.6	xxxx	xxxxx	8.3	xxxx	xxxxx	xxxxx	xxxx	xxxxx	xxxxx	xxxx	xxxxx
LOS by Move:	A	*	*	A	*	*	*	*	*	*	*	*
Movement:	LT -	LTR -	RT	LT -	LTR -	RT	LT -	LTR -	RT	LT -	LTR -	RT
Shared Cap.:	xxxx	xxxx	xxxxx	xxxx	xxxx	xxxxx	xxxx	370	xxxxx	xxxx	197	xxxxx
SharedQueue:	xxxxx	xxxx	xxxxx	xxxxx	xxxx	xxxxx	xxxxx	0.2	xxxxx	xxxxx	1.3	xxxxx
Shrd StpDel:	xxxxx	xxxx	xxxxx	xxxxx	xxxx	xxxxx	xxxxx	15.4	xxxxx	xxxxx	31.5	xxxxx
Shared LOS:	*	*	*	*	*	*	*	C	*	*	D	*
ApproachDel:	xxxxxx			xxxxxx			15.4			31.5		
ApproachLOS:	*			*			C			D		

Wilson Creek Estates
Traffic Impact Analysis

Level Of Service Computation Report
2000 HCM Unsignalized Method (Base Volume Alternative)

Intersection #4 Carter St & Jefferson St

Average Delay (sec/veh): 1.6 Worst Case Level Of Service: A[8.8]

Approach:	North Bound				South Bound				East Bound				West Bound			
Movement:	L	- T	- R		L	- T	- R		L	- T	- R		L	- T	- R	
Control:	Stop Sign				Stop Sign				Uncontrolled				Uncontrolled			
Rights:	Include				Include				Include				Include			
Lanes:	1 0 0	0	0		0 0	0	1	0	0 0	1!	0	0	0 0	1	0	0
Volume Module:																
Base Vol:	3	0	0	0	2	2	2	21	3	0	14	0				
Growth Adj:	1.00	1.00	1.00	1.00	1.00	1.00	1.00	1.00	1.00	1.00	1.00	1.00				
Initial Bse:	3	0	0	0	2	2	2	21	3	0	14	0				
User Adj:	1.00	1.00	1.00	1.00	1.00	1.00	1.00	1.00	1.00	1.00	1.00	1.00				
PHF Adj:	1.00	1.00	1.00	1.00	1.00	1.00	1.00	1.00	1.00	1.00	1.00	1.00				
PHF Volume:	3	0	0	0	2	2	2	21	3	0	14	0				
Reduct Vol:	0	0	0	0	0	0	0	0	0	0	0	0				
Final Vol.:	3	0	0	0	2	2	2	21	3	0	14	0				
Critical Gap Module:																
Critical Gp:	7.1	xxxx	xxxxx	xxxxx	6.5	6.2	4.1	xxxx	xxxxx	xxxxx	xxxx	xxxxx				
FollowUpTim:	3.5	xxxx	xxxxx	xxxxx	4.0	3.3	2.2	xxxx	xxxxx	xxxxx	xxxx	xxxxx				
Capacity Module:																
Cnflict Vol:	43	xxxx	xxxxx	xxxx	42	14	14	xxxx	xxxxx	xxxx	xxxx	xxxxx				
Potent Cap.:	966	xxxx	xxxxx	xxxx	854	1072	1617	xxxx	xxxxx	xxxx	xxxx	xxxxx				
Move Cap.:	961	xxxx	xxxxx	xxxx	853	1072	1617	xxxx	xxxxx	xxxx	xxxx	xxxxx				
Volume/Cap:	0.00	xxxx	xxxx	xxxx	0.00	0.00	0.00	xxxx	xxxx	xxxx	xxxx	xxxx				
Level Of Service Module:																
Queue:	0.0	xxxx	xxxxx	xxxxx	xxxx	xxxxx	0.0	xxxx	xxxxx	xxxxx	xxxx	xxxxx				
Stopped Del:	8.8	xxxx	xxxxx	xxxxx	xxxx	xxxxx	7.2	xxxx	xxxxx	xxxxx	xxxx	xxxxx				
LOS by Move:	A	*	*	*	*	*	A	*	*	*	*	*				
Movement:	LT -	LTR -	RT	LT -	LTR -	RT	LT -	LTR -	RT	LT -	LTR -	RT				
Shared Cap.:	xxxx	xxxx	xxxxx	xxxx	xxxx	950	xxxx	xxxx	xxxxx	xxxx	xxxx	xxxxx				
SharedQueue:	xxxxx	xxxx	xxxxx	xxxxx	xxxx	0.0	xxxxx	xxxx	xxxxx	xxxxx	xxxx	xxxxx				
Shrd StpDel:	xxxxx	xxxx	xxxxx	xxxxx	xxxx	8.8	xxxxx	xxxx	xxxxx	xxxxx	xxxx	xxxxx				
Shared LOS:	*	*	*	*	*	A	*	*	*	*	*	*				
ApproachDel:	8.8			8.8			xxxxxx			xxxxxx						
ApproachLOS:	A			A			*			*						

Wilson Creek Estates
Traffic Impact Analysis

Level Of Service Computation Report
2000 HCM Unsignalized Method (Base Volume Alternative)

Intersection #5 Oak Glen Rd & Pendleton Rd

Average Delay (sec/veh): 0.5 Worst Case Level Of Service: B[10.1]

Approach:	North Bound			South Bound			East Bound			West Bound		
Movement:	L - T - R			L - T - R			L - T - R			L - T - R		
Control:	Stop Sign			Stop Sign			Uncontrolled			Uncontrolled		
Rights:	Include			Include			Include			Include		
Lanes:	0 0 1! 0 0			0 0 1! 0 0			0 0 0 1 0			0 1 0 0 0		
Volume Module:												
Base Vol:	12	0	4	0	0	0	0	159	29	2	131	0
Growth Adj:	1.00	1.00	1.00	1.00	1.00	1.00	1.00	1.00	1.00	1.00	1.00	1.00
Initial Bse:	12	0	4	0	0	0	0	159	29	2	131	0
User Adj:	1.00	1.00	1.00	1.00	1.00	1.00	1.00	1.00	1.00	1.00	1.00	1.00
PHF Adj:	1.00	1.00	1.00	1.00	1.00	1.00	1.00	1.00	1.00	1.00	1.00	1.00
PHF Volume:	12	0	4	0	0	0	0	159	29	2	131	0
Reduct Vol:	0	0	0	0	0	0	0	0	0	0	0	0
Final Vol.:	12	0	4	0	0	0	0	159	29	2	131	0
Critical Gap Module:												
Critical Gp:	6.4	xxxx	6.2	xxxxx	xxxx	xxxxx	xxxxx	xxxx	xxxxx	4.1	xxxx	xxxxx
FollowUpTim:	3.5	xxxx	3.3	xxxxx	xxxx	xxxxx	xxxxx	xxxx	xxxxx	2.2	xxxx	xxxxx
Capacity Module:												
Cnflict Vol:	309	xxxx	174	xxxx	xxxx	xxxxx	xxxx	xxxx	xxxxx	188	xxxx	xxxxx
Potent Cap.:	688	xxxx	875	xxxx	xxxx	xxxxx	xxxx	xxxx	xxxxx	1398	xxxx	xxxxx
Move Cap.:	687	xxxx	875	xxxx	xxxx	xxxxx	xxxx	xxxx	xxxxx	1398	xxxx	xxxxx
Volume/Cap:	0.02	xxxx	0.00	xxxx	xxxx	xxxx	xxxx	xxxx	xxxx	0.00	xxxx	xxxx
Level Of Service Module:												
Queue:	xxxxx	xxxx	xxxxx	xxxxx	xxxx	xxxxx	xxxxx	xxxx	xxxxx	0.0	xxxx	xxxxx
Stopped Del:	xxxxx	xxxx	xxxxx	xxxxx	xxxx	xxxxx	xxxxx	xxxx	xxxxx	7.6	xxxx	xxxxx
LOS by Move:	*	*	*	*	*	*	*	*	*	A	*	*
Movement:	LT - LTR - RT			LT - LTR - RT			LT - LTR - RT			LT - LTR - RT		
Shared Cap.:	xxxx	726	xxxxx	xxxx	0	xxxxx	xxxx	xxxx	xxxxx	xxxx	xxxx	xxxxx
SharedQueue:	xxxxx	0.1	xxxxx	xxxxx	xxxx	xxxxx	xxxxx	xxxx	xxxxx	0.0	xxxx	xxxxx
Shrd StpDel:	xxxxx	10.1	xxxxx	xxxxx	xxxx	xxxxx	xxxxx	xxxx	xxxxx	7.6	xxxx	xxxxx
Shared LOS:	*	B	*	*	*	*	*	*	*	A	*	*
ApproachDel:	10.1			xxxxxx			xxxxxx			xxxxxx		
ApproachLOS:	B			*			*			*		

Wilson Creek Estates
Traffic Impact Analysis

Level Of Service Computation Report
2000 HCM Unsignalized Method (Base Volume Alternative)

Intersection #6 Oak Glen Rd & Casa Blance Rd

Average Delay (sec/veh): 1.0 Worst Case Level Of Service: B[10.0]

Approach:	North Bound				South Bound				East Bound				West Bound			
Movement:	L	- T	- R		L	- T	- R		L	- T	- R		L	- T	- R	
Control:	Stop Sign				Stop Sign				Uncontrolled				Uncontrolled			
Rights:	Include				Include				Include				Include			
Lanes:	1 0	0	0	0	0 0	1!	0	0	0 0	0	1	0	0 1	0	0	0
Volume Module:																
Base Vol:	30	0	0	0	0	0	0	105	63		2	104		0		
Growth Adj:	1.00	1.00	1.00	1.00	1.00	1.00	1.00	1.00	1.00		1.00	1.00		1.00		
Initial Bse:	30	0	0	0	0	0	0	105	63		2	104		0		
User Adj:	1.00	1.00	1.00	1.00	1.00	1.00	1.00	1.00	1.00		1.00	1.00		1.00		
PHF Adj:	1.00	1.00	1.00	1.00	1.00	1.00	1.00	1.00	1.00		1.00	1.00		1.00		
PHF Volume:	30	0	0	0	0	0	0	105	63		2	104		0		
Reduct Vol:	0	0	0	0	0	0	0	0	0		0	0		0		
Final Vol.:	30	0	0	0	0	0	0	105	63		2	104		0		
Critical Gap Module:																
Critical Gp:	6.4	xxxx	xxxxx	xxxxx	xxxx	xxxxx	xxxxx	xxxx	xxxxx		4.1	xxxx		xxxxx		
FollowUpTim:	3.5	xxxx	xxxxx	xxxxx	xxxx	xxxxx	xxxxx	xxxx	xxxxx		2.2	xxxx		xxxxx		
Capacity Module:																
Cnflict Vol:	245	xxxx	xxxxx	xxxx	xxxx	xxxxx	xxxx	xxxx	xxxxx		168	xxxx		xxxxx		
Potent Cap.:	748	xxxx	xxxxx	xxxx	xxxx	xxxxx	xxxx	xxxx	xxxxx		1422	xxxx		xxxxx		
Move Cap.:	747	xxxx	xxxxx	xxxx	xxxx	xxxxx	xxxx	xxxx	xxxxx		1422	xxxx		xxxxx		
Volume/Cap:	0.04	xxxx	xxxx	xxxx	xxxx	xxxx	xxxx	xxxx	xxxx		0.00	xxxx		xxxx		
Level Of Service Module:																
Queue:	0.1	xxxx	xxxxx	xxxxx	xxxx	xxxxx	xxxxx	xxxx	xxxxx		0.0	xxxx		xxxxx		
Stopped Del:	10.0	xxxx	xxxxx	xxxxx	xxxx	xxxxx	xxxxx	xxxx	xxxxx		7.5	xxxx		xxxxx		
LOS by Move:	B	*	*	*	*	*	*	*	*		A	*		*		
Movement:	LT -	LTR -	RT		LT -	LTR -	RT		LT -	LTR -	RT		LT -	LTR -	RT	
Shared Cap.:	xxxx	xxxx	xxxxx	xxxx		0	xxxxx	xxxx	xxxx	xxxxx		xxxx	xxxx	xxxxx		
SharedQueue:	xxxxx	xxxx	xxxxx	xxxxx	xxxx	xxxxx	xxxxx	xxxx	xxxxx		0.0	xxxx		xxxxx		
Shrd StpDel:	xxxxx	xxxx	xxxxx	xxxxx	xxxx	xxxxx	xxxxx	xxxx	xxxxx		7.5	xxxx		xxxxx		
Shared LOS:	*	*	*	*	*	*	*	*	*		A	*		*		
ApproachDel:		10.0			xxxxxx			xxxxxx			xxxxxx					
ApproachLOS:		B			*			*			*					

Wilson Creek Estates
Traffic Impact Analysis

Level Of Service Computation Report
2000 HCM Unsignalized Method (Base Volume Alternative)

Intersection #7 Oak Glen Rd & Cherry Croft Rd

Average Delay (sec/veh): 0.1 Worst Case Level Of Service: B[10.6]

Approach:	North Bound					South Bound					East Bound					West Bound				
Movement:	L	-	T	-	R	L	-	T	-	R	L	-	T	-	R	L	-	T	-	R
Control:	Stop Sign					Stop Sign					Uncontrolled					Uncontrolled				
Rights:	Include					Include					Include					Include				
Lanes:	0	0	0	0	0	1	0	0	0	0	1	0	1	0	0	0	0	1	0	0
Volume Module:																				
Base Vol:	0	0	0			2	0	0			3	206	0			0	144	0		
Growth Adj:	1.00	1.00	1.00			1.00	1.00	1.00			1.00	1.00	1.00			1.00	1.00	1.00		
Initial Bse:	0	0	0			2	0	0			3	206	0			0	144	0		
User Adj:	1.00	1.00	1.00			1.00	1.00	1.00			1.00	1.00	1.00			1.00	1.00	1.00		
PHF Adj:	1.00	1.00	1.00			1.00	1.00	1.00			1.00	1.00	1.00			1.00	1.00	1.00		
PHF Volume:	0	0	0			2	0	0			3	206	0			0	144	0		
Reduct Vol:	0	0	0			0	0	0			0	0	0			0	0	0		
Final Vol.:	0	0	0			2	0	0			3	206	0			0	144	0		
Critical Gap Module:																				
Critical Gp:	xxxxx	xxxx	xxxxx			6.4	xxxx	xxxxx			4.1	xxxx	xxxxx			xxxxx	xxxx	xxxxx		
FollowUpTim:	xxxxx	xxxx	xxxxx			3.5	xxxx	xxxxx			2.2	xxxx	xxxxx			xxxxx	xxxx	xxxxx		
Capacity Module:																				
Cnflict Vol:	xxxx	xxxx	xxxxx			356	xxxx	xxxxx			144	xxxx	xxxxx			xxxx	xxxx	xxxxx		
Potent Cap.:	xxxx	xxxx	xxxxx			646	xxxx	xxxxx			1451	xxxx	xxxxx			xxxx	xxxx	xxxxx		
Move Cap.:	xxxx	xxxx	xxxxx			645	xxxx	xxxxx			1451	xxxx	xxxxx			xxxx	xxxx	xxxxx		
Volume/Cap:	xxxx	xxxx	xxxx			0.00	xxxx	xxxx			0.00	xxxx	xxxx			xxxx	xxxx	xxxx		
Level Of Service Module:																				
Queue:	xxxxx	xxxx	xxxxx			0.0	xxxx	xxxxx			0.0	xxxx	xxxxx			xxxxx	xxxx	xxxxx		
Stopped Del:	xxxxx	xxxx	xxxxx			10.6	xxxx	xxxxx			7.5	xxxx	xxxxx			xxxxx	xxxx	xxxxx		
LOS by Move:	*	*	*			B	*	*			A	*	*			*	*	*		
Movement:	LT	-	LTR	-	RT	LT	-	LTR	-	RT	LT	-	LTR	-	RT	LT	-	LTR	-	RT
Shared Cap.:	xxxx	xxxx	xxxxx			xxxx	xxxx	xxxxx			xxxx	xxxx	xxxxx			xxxx	xxxx	xxxxx		
SharedQueue:	xxxxx	xxxx	xxxxx			xxxxx	xxxx	xxxxx			xxxxx	xxxx	xxxxx			xxxxx	xxxx	xxxxx		
Shrd StpDel:	xxxxx	xxxx	xxxxx			xxxxx	xxxx	xxxxx			xxxxx	xxxx	xxxxx			xxxxx	xxxx	xxxxx		
Shared LOS:	*	*	*			*	*	*			*	*	*			*	*	*		
ApproachDel:	xxxxxx					10.6					xxxxxx					xxxxxx				
ApproachLOS:	*					B					*					*				

Wilson Creek Estates
Traffic Impact Analysis

Level Of Service Computation Report
2000 HCM Unsignalized Method (Base Volume Alternative)

Intersection #8 Pendleton Rd & Date Ave

Average Delay (sec/veh): 5.2 Worst Case Level Of Service: A[9.3]

Approach:	North Bound					South Bound					East Bound					West Bound				
Movement:	L	-	T	-	R	L	-	T	-	R	L	-	T	-	R	L	-	T	-	R
Control:	Uncontrolled					Uncontrolled					Stop Sign					Stop Sign				
Rights:	Include					Include					Include					Include				
Lanes:	0	1	0	0	0	0	0	0	1	0	0	0	1!	0	0	0	0	1	0	0
Volume Module:																				
Base Vol:	6	6	0	0	2	27	38	0	6	0	3	0								
Growth Adj:	1.00	1.00	1.00	1.00	1.00	1.00	1.00	1.00	1.00	1.00	1.00	1.00								
Initial Bse:	6	6	0	0	2	27	38	0	6	0	3	0								
User Adj:	1.00	1.00	1.00	1.00	1.00	1.00	1.00	1.00	1.00	1.00	1.00	1.00								
PHF Adj:	1.00	1.00	1.00	1.00	1.00	1.00	1.00	1.00	1.00	1.00	1.00	1.00								
PHF Volume:	6	6	0	0	2	27	38	0	6	0	3	0								
Reduct Vol:	0	0	0	0	0	0	0	0	0	0	0	0								
Final Vol.:	6	6	0	0	2	27	38	0	6	0	3	0								
Critical Gap Module:																				
Critical Gp:	4.1	xxxx	xxxxx	xxxxx	xxxx	xxxxx	7.1	xxxx	6.2	xxxxx	6.5	xxxxx								
FollowUpTim:	2.2	xxxx	xxxxx	xxxxx	xxxx	xxxxx	3.5	xxxx	3.3	xxxxx	4.0	xxxxx								
Capacity Module:																				
Cnflict Vol:	29	xxxx	xxxxx	xxxx	xxxx	xxxxx	35	xxxx	16	xxxx	47	xxxxx								
Potent Cap.:	1597	xxxx	xxxxx	xxxx	xxxx	xxxxx	976	xxxx	1070	xxxx	849	xxxxx								
Move Cap.:	1597	xxxx	xxxxx	xxxx	xxxx	xxxxx	971	xxxx	1070	xxxx	845	xxxxx								
Volume/Cap:	0.00	xxxx	xxxx	xxxx	xxxx	xxxx	0.04	xxxx	0.01	xxxx	0.00	xxxx								
Level Of Service Module:																				
Queue:	0.0	xxxx	xxxxx	xxxxx	xxxx	xxxxx	xxxxx	xxxx	xxxxx	xxxxx	0.0	xxxxx								
Stopped Del:	7.3	xxxx	xxxxx	xxxxx	xxxx	xxxxx	xxxxx	xxxx	xxxxx	xxxxx	9.3	xxxxx								
LOS by Move:	A	*	*	*	*	*	*	*	*	*	A	*								
Movement:	LT	-	LTR	-	RT	LT	-	LTR	-	RT	LT	-	LTR	-	RT	LT	-	LTR	-	RT
Shared Cap.:	xxxx	xxxx	xxxxx	xxxx	xxxx	xxxxx	xxxx	983	xxxxx	xxxx	xxxx	xxxxx								
SharedQueue:	0.0	xxxx	xxxxx	xxxxx	xxxx	xxxxx	xxxxx	0.1	xxxxx	xxxxx	xxxx	xxxxx								
Shrd StpDel:	7.3	xxxx	xxxxx	xxxxx	xxxx	xxxxx	xxxxx	8.8	xxxxx	xxxxx	xxxx	xxxxx								
Shared LOS:	A	*	*	*	*	*	*	A	*	*	*	*								
ApproachDel:	xxxxxx			xxxxxx				8.8			9.3									
ApproachLOS:	*			*				A			A									

APPENDIX E

INTERSECTION ANALYSIS WORKSHEETS

LONG TERM (2040) BUILD CONDITION

Wilson Creek Estates
Traffic Impact Analysis

Level Of Service Computation Report
2000 HCM Operations Method (Future Volume Alternative)

Intersection #1 Oak Glen Rd & Bryant St

Cycle (sec): 60 Critical Vol./Cap. (X): 0.676
Loss Time (sec): 4 (Y+R = 4 sec) Average Delay (sec/veh): 19.4
Optimal Cycle: 31 Level Of Service: B

Approach:	North Bound			South Bound			East Bound			West Bound		
Movement:	L - T - R			L - T - R			L - T - R			L - T - R		
Control:	Protected			Protected			Protected			Protected		
Rights:	Include			Include			Include			Include		
Min. Green:	0	0	0	0	0	0	0	0	0	0	0	0
Lanes:	1 0 2 0 1			1 0 2 0 1			1 0 1 0 1			1 0 1 0 1		
Volume Module:												
Base Vol:	274	537	79	46	530	385	175	131	231	67	293	74
Growth Adj:	1.00	1.00	1.00	1.00	1.00	1.00	1.00	1.00	1.00	1.00	1.00	1.00
Initial Bse:	274	537	79	46	530	385	175	131	231	67	293	74
Added Vol:	0	1	15	0	4	5	2	14	0	45	41	0
PasserByVol:	0	0	0	0	0	0	0	0	0	0	0	0
Initial Fut:	274	538	94	46	534	390	177	145	231	112	334	74
User Adj:	1.00	1.00	1.00	1.00	1.00	1.00	1.00	1.00	1.00	1.00	1.00	1.00
PHF Adj:	1.00	1.00	1.00	1.00	1.00	1.00	1.00	1.00	1.00	1.00	1.00	1.00
PHF Volume:	274	538	94	46	534	390	177	145	231	112	334	74
Reduct Vol:	0	0	0	0	0	0	0	0	0	0	0	0
Reduced Vol:	274	538	94	46	534	390	177	145	231	112	334	74
PCE Adj:	1.00	1.00	1.00	1.00	1.00	1.00	1.00	1.00	1.00	1.00	1.00	1.00
MLF Adj:	1.00	1.00	1.00	1.00	1.00	1.00	1.00	1.00	1.00	1.00	1.00	1.00
Final Vol.:	274	538	94	46	534	390	177	145	231	112	334	74
Saturation Flow Module:												
Sat/Lane:	1900	1900	1900	1900	1900	1900	1900	1900	1900	1900	1900	1900
Adjustment:	0.95	0.95	1.00	0.95	0.95	1.00	0.95	1.00	1.00	0.95	1.00	1.00
Lanes:	1.00	2.00	1.00	1.00	2.00	1.00	1.00	1.00	1.00	1.00	1.00	1.00
Final Sat.:	1805	3610	1900	1805	3610	1900	1805	1900	1900	1805	1900	1900
Capacity Analysis Module:												
Vol/Sat:	0.15	0.15	0.05	0.03	0.15	0.21	0.10	0.08	0.12	0.06	0.18	0.04
Crit Moves:	****					****	****				****	
Green/Cycle:	0.22	0.45	0.45	0.08	0.30	0.30	0.15	0.27	0.27	0.14	0.26	0.26
Volume/Cap:	0.68	0.33	0.11	0.33	0.49	0.68	0.68	0.28	0.45	0.45	0.68	0.15
Delay/Veh:	25.8	10.7	9.6	27.6	17.4	21.5	31.2	17.7	18.9	25.1	23.6	17.2
User DelAdj:	1.00	1.00	1.00	1.00	1.00	1.00	1.00	1.00	1.00	1.00	1.00	1.00
AdjDel/Veh:	25.8	10.7	9.6	27.6	17.4	21.5	31.2	17.7	18.9	25.1	23.6	17.2
HCM2kAvg:	6	3	1	1	5	8	5	2	4	3	7	1

Wilson Creek Estates
Traffic Impact Analysis

Level Of Service Computation Report
2000 HCM Operations Method (Future Volume Alternative)

Intersection #2 Bryant St & Fir Ave

Cycle (sec): 60 Critical Vol./Cap. (X): 0.522
Loss Time (sec): 4 (Y+R = 4 sec) Average Delay (sec/veh): 12.4
Optimal Cycle: 23 Level Of Service: B

Approach:	North Bound			South Bound			East Bound			West Bound		
Movement:	L - T - R			L - T - R			L - T - R			L - T - R		
Control:	Permitted			Permitted			Permitted			Permitted		
Rights:	Include			Include			Include			Include		
Min. Green:	0	0	0	0	0	0	0	0	0	0	0	0
Lanes:	1 0 2 0 1			1 0 1 1 0			0 0 1! 0 0			0 0 1! 0 0		
Volume Module:												
Base Vol:	356	475	17	6	568	26	89	23	434	52	24	12
Growth Adj:	1.00	1.00	1.00	1.00	1.00	1.00	1.00	1.00	1.00	1.00	1.00	1.00
Initial Bse:	356	475	17	6	568	26	89	23	434	52	24	12
Added Vol:	0	0	3	0	0	0	0	0	0	9	0	0
PasserByVol:	0	0	0	0	0	0	0	0	0	0	0	0
Initial Fut:	356	475	20	6	568	26	89	23	434	61	24	12
User Adj:	1.00	1.00	1.00	1.00	1.00	1.00	1.00	1.00	1.00	1.00	1.00	1.00
PHF Adj:	1.00	1.00	1.00	1.00	1.00	1.00	1.00	1.00	1.00	1.00	1.00	1.00
PHF Volume:	356	475	20	6	568	26	89	23	434	61	24	12
Reduct Vol:	0	0	0	0	0	0	0	0	0	0	0	0
Reduced Vol:	356	475	20	6	568	26	89	23	434	61	24	12
PCE Adj:	1.00	1.00	1.00	1.00	1.00	1.00	1.00	1.00	1.00	1.00	1.00	1.00
MLF Adj:	1.00	1.00	1.00	1.00	1.00	1.00	1.00	1.00	1.00	1.00	1.00	1.00
Final Vol.:	356	475	20	6	568	26	89	23	434	61	24	12
Saturation Flow Module:												
Sat/Lane:	1900	1900	1900	1900	1900	1900	1900	1900	1900	1900	1900	1900
Adjustment:	0.95	0.95	1.00	0.95	0.95	0.95	0.95	1.00	1.00	0.95	1.00	1.00
Lanes:	1.00	2.00	1.00	1.00	1.91	0.09	0.17	0.04	0.79	0.64	0.24	0.12
Final Sat.:	1805	3610	1900	1805	3452	158	307	79	1497	1157	455	228
Capacity Analysis Module:												
Vol/Sat:	0.20	0.13	0.01	0.00	0.16	0.16	0.29	0.29	0.29	0.05	0.05	0.05
Crit Moves:	****							****				
Green/Cycle:	0.38	0.38	0.38	0.38	0.38	0.38	0.56	0.56	0.56	0.56	0.56	0.56
Volume/Cap:	0.52	0.35	0.03	0.01	0.44	0.44	0.52	0.52	0.52	0.09	0.09	0.09
Delay/Veh:	15.2	13.5	11.7	11.7	14.1	14.1	8.8	8.8	8.8	6.3	6.3	6.3
User DelAdj:	1.00	1.00	1.00	1.00	1.00	1.00	1.00	1.00	1.00	1.00	1.00	1.00
AdjDel/Veh:	15.2	13.5	11.7	11.7	14.1	14.1	8.8	8.8	8.8	6.3	6.3	6.3
HCM2kAvg:	6	3	0	0	4	4	7	7	7	1	1	1

Wilson Creek Estates
Traffic Impact Analysis

Level Of Service Computation Report
2000 HCM Unsignalized Method (Future Volume Alternative)

Intersection #3 Bryant St & Carter St

Average Delay (sec/veh): 4.2 Worst Case Level Of Service: E[36.0]

Approach:	North Bound						South Bound						East Bound						West Bound					
Movement:	L	-	T	-	R		L	-	T	-	R		L	-	T	-	R		L	-	T	-	R	
Control:	Uncontrolled						Uncontrolled						Stop Sign						Stop Sign					
Rights:	Include						Include						Include						Include					
Lanes:	1	0	0	1	0		1	0	0	1	0		0	0	1!	0	0		0	0	1!	0	0	
Volume Module:																								
Base Vol:	8	606		45			3	446		3			12		0		24		77		0		50	
Growth Adj:	1.00	1.00		1.00			1.00	1.00		1.00			1.00		1.00		1.00		1.00		1.00		1.00	
Initial Bse:	8	606		45			3	446		3			12		0		24		77		0		50	
Added Vol:	0	0		0			0	0		0			0		0		0		0		0		0	
PasserByVol:	0	0		0			0	0		0			0		0		0		0		0		0	
Initial Fut:	8	606		45			3	446		3			12		0		24		77		0		50	
User Adj:	1.00	1.00		1.00			1.00	1.00		1.00			1.00		1.00		1.00		1.00		1.00		1.00	
PHF Adj:	1.00	1.00		1.00			1.00	1.00		1.00			1.00		1.00		1.00		1.00		1.00		1.00	
PHF Volume:	8	606		45			3	446		3			12		0		24		77		0		50	
Reduct Vol:	0	0		0			0	0		0			0		0		0		0		0		0	
Final Vol.:	8	606		45			3	446		3			12		0		24		77		0		50	
Critical Gap Module:																								
Critical Gp:	4.1	xxxx	xxxxx				4.1	xxxx	xxxxx				7.1	xxxx			6.2		7.1	xxxx			6.2	
FollowUpTim:	2.2	xxxx	xxxxx				2.2	xxxx	xxxxx				3.5	xxxx			3.3		3.5	xxxx			3.3	
Capacity Module:																								
Cnflict Vol:	449	xxxx	xxxxx				651	xxxx	xxxxx				1123	xxxx			447		1110	xxxx			629	
Potent Cap.:	1122	xxxx	xxxxx				945	xxxx	xxxxx				185	xxxx			615		188	xxxx			486	
Move Cap.:	1122	xxxx	xxxxx				945	xxxx	xxxxx				164	xxxx			615		180	xxxx			486	
Volume/Cap:	0.01	xxxx	xxxx				0.00	xxxx	xxxx				0.07	xxxx			0.04		0.43	xxxx			0.10	
Level Of Service Module:																								
Queue:	0.0	xxxx	xxxxx				0.0	xxxx	xxxxx				xxxxx	xxxx			xxxxx		xxxxx	xxxx			xxxxx	
Stopped Del:	8.2	xxxx	xxxxx				8.8	xxxx	xxxxx				xxxxx	xxxx			xxxxx		xxxxx	xxxx			xxxxx	
LOS by Move:	A	*	*				A	*	*				*	*			*		*	*			*	
Movement:	LT	-	LTR	-	RT		LT	-	LTR	-	RT		LT	-	LTR	-	RT		LT	-	LTR	-	RT	
Shared Cap.:	xxxx	xxxx	xxxxx				xxxx	xxxx	xxxxx				xxxx		321		xxxxx		xxxx		239		xxxxx	
SharedQueue:	xxxxx	xxxx	xxxxx				xxxxx	xxxx	xxxxx				xxxxx		0.4		xxxxx		xxxxx		2.8		xxxxx	
Shrd StpDel:	xxxxx	xxxx	xxxxx				xxxxx	xxxx	xxxxx				xxxxx		17.6		xxxxx		xxxxx		36.0		xxxxx	
Shared LOS:	*	*	*				*	*	*				*		C		*		*		E		*	
ApproachDel:	xxxxxx						xxxxxx						17.6						36.0					
ApproachLOS:	*						*						C						E					

Wilson Creek Estates
Traffic Impact Analysis

Level Of Service Computation Report
2000 HCM Unsignalized Method (Future Volume Alternative)

Intersection #4 Carter St & Jefferson St

Average Delay (sec/veh): 3.0 Worst Case Level Of Service: A[9.2]

Approach:	North Bound					South Bound					East Bound					West Bound				
Movement:	L	-	T	-	R	L	-	T	-	R	L	-	T	-	R	L	-	T	-	R
Control:	Stop Sign					Stop Sign					Uncontrolled					Uncontrolled				
Rights:	Include					Include					Include					Include				
Lanes:	0	0	1	0	0	0	1	0	0	0	0	1	0	0	0	0	0	1	0	0
Volume Module:																				
Base Vol:	0	2	0	3	0	0	2	12	0	0	15	0								
Growth Adj:	1.00	1.00	1.00	1.00	1.00	1.00	1.00	1.00	1.00	1.00	1.00	1.00								
Initial Bse:	0	2	0	3	0	0	2	12	0	0	15	0								
Added Vol:	0	5	0	0	2	0	0	0	0	0	0	0								
PasserByVol:	0	0	0	0	0	0	0	0	0	0	0	0								
Initial Fut:	0	7	0	3	2	0	2	12	0	0	15	0								
User Adj:	1.00	1.00	1.00	1.00	1.00	1.00	1.00	1.00	1.00	1.00	1.00	1.00								
PHF Adj:	1.00	1.00	1.00	1.00	1.00	1.00	1.00	1.00	1.00	1.00	1.00	1.00								
PHF Volume:	0	7	0	3	2	0	2	12	0	0	15	0								
Reduct Vol:	0	0	0	0	0	0	0	0	0	0	0	0								
Final Vol.:	0	7	0	3	2	0	2	12	0	0	15	0								
Critical Gap Module:																				
Critical Gp:	xxxxx	6.5	xxxxx	7.1	6.5	xxxxx	4.1	xxxx	xxxxx	xxxxx	xxxx	xxxxx								
FollowUpTim:	xxxxx	4.0	xxxxx	3.5	4.0	xxxxx	2.2	xxxx	xxxxx	xxxxx	xxxx	xxxxx								
Capacity Module:																				
Cnflict Vol:	xxxx	31	xxxxx	35	31	xxxxx	15	xxxx	xxxxx	xxxx	xxxx	xxxxx								
Potent Cap.:	xxxx	866	xxxxx	977	866	xxxxx	1616	xxxx	xxxxx	xxxx	xxxx	xxxxx								
Move Cap.:	xxxx	865	xxxxx	970	865	xxxxx	1616	xxxx	xxxxx	xxxx	xxxx	xxxxx								
Volume/Cap:	xxxx	0.01	xxxx	0.00	0.00	xxxx	0.00	xxxx	xxxx	xxxx	xxxx	xxxx								
Level Of Service Module:																				
Queue:	xxxxx	0.0	xxxxx	xxxxx	xxxx	xxxxx	0.0	xxxx	xxxxx	xxxxx	xxxx	xxxxx								
Stopped Del:	xxxxx	9.2	xxxxx	xxxxx	xxxx	xxxxx	7.2	xxxx	xxxxx	xxxxx	xxxx	xxxxx								
LOS by Move:	*	A	*	*	*	*	A	*	*	*	*	*								
Movement:	LT	-	LTR	-	RT	LT	-	LTR	-	RT	LT	-	LTR	-	RT	LT	-	LTR	-	RT
Shared Cap.:	xxxx	xxxx	xxxxx	925	xxxx	xxxxx	xxxx	xxxx	xxxxx	xxxx	xxxx	xxxxx								
SharedQueue:	xxxxx	xxxx	xxxxx	0.0	xxxx	xxxxx	0.0	xxxx	xxxxx	xxxxx	xxxx	xxxxx								
Shrd StpDel:	xxxxx	xxxx	xxxxx	8.9	xxxx	xxxxx	7.2	xxxx	xxxxx	xxxxx	xxxx	xxxxx								
Shared LOS:	*	*	*	A	*	*	A	*	*	*	*	*								
ApproachDel:	9.2			8.9			xxxxxx			xxxxxx										
ApproachLOS:	A			A			*			*										

Wilson Creek Estates
Traffic Impact Analysis

Level Of Service Computation Report
2000 HCM Unsignalized Method (Future Volume Alternative)

Intersection #5 Oak Glen Rd & Pendleton Rd

Average Delay (sec/veh): 2.7 Worst Case Level Of Service: B[11.6]

Approach:	North Bound						South Bound						East Bound						West Bound					
Movement:	L	-	T	-	R		L	-	T	-	R		L	-	T	-	R		L	-	T	-	R	
Control:	Stop Sign						Stop Sign						Uncontrolled						Uncontrolled					
Rights:	Include						Include						Include						Include					
Lanes:	0	0	1!	0	0		0	0	1!	0	0		0	0	1!	0	0		0	0	0	1	0	
Volume Module:																								
Base Vol:	33	0	5	0	0	0	0	77	13	0	176	0												
Growth Adj:	1.00	1.00	1.00	1.00	1.00	1.00	1.00	1.00	1.00	1.00	1.00	1.00												
Initial Bse:	33	0	5	0	0	0	0	77	13	0	176	0												
Added Vol:	0	1	0	1	3	52	18	10	0	0	30	2												
PasserByVol:	0	0	0	0	0	0	0	0	0	0	0	0												
Initial Fut:	33	1	5	1	3	52	18	87	13	0	206	2												
User Adj:	1.00	1.00	1.00	1.00	1.00	1.00	1.00	1.00	1.00	1.00	1.00	1.00												
PHF Adj:	1.00	1.00	1.00	1.00	1.00	1.00	1.00	1.00	1.00	1.00	1.00	1.00												
PHF Volume:	33	1	5	1	3	52	18	87	13	0	206	2												
Reduct Vol:	0	0	0	0	0	0	0	0	0	0	0	0												
Final Vol.:	33	1	5	1	3	52	18	87	13	0	206	2												
Critical Gap Module:																								
Critical Gp:	7.1	6.5	6.2	7.1	6.5	6.2	4.1	xxxx	xxxxx	xxxxx	xxxx	xxxxx												
FollowUpTim:	3.5	4.0	3.3	3.5	4.0	3.3	2.2	xxxx	xxxxx	xxxxx	xxxx	xxxxx												
Capacity Module:																								
Cnflict Vol:	364	338	94	340	343	207	208	xxxx	xxxxx	xxxx	xxxx	xxxxx												
Potent Cap.:	596	587	969	618	583	839	1375	xxxx	xxxxx	xxxx	xxxx	xxxxx												
Move Cap.:	551	579	969	608	575	839	1375	xxxx	xxxxx	xxxx	xxxx	xxxxx												
Volume/Cap:	0.06	0.00	0.01	0.00	0.01	0.06	0.01	xxxx	xxxx	xxxx	xxxx	xxxx												
Level Of Service Module:																								
Queue:	xxxxx	xxxx	xxxxx	xxxxx	xxxx	xxxxx	0.0	xxxx	xxxxx	xxxxx	xxxx	xxxxx												
Stopped Del:	xxxxx	xxxx	xxxxx	xxxxx	xxxx	xxxxx	7.7	xxxx	xxxxx	xxxxx	xxxx	xxxxx												
LOS by Move:	*	*	*	*	*	*	A	*	*	*	*	*												
Movement:	LT	-	LTR	-	RT		LT	-	LTR	-	RT		LT	-	LTR	-	RT		LT	-	LTR	-	RT	
Shared Cap.:	xxxx	584	xxxxx	xxxx	813	xxxxx	xxxx	xxxx	xxxxx	xxxx	xxxx	xxxxx												
SharedQueue:	xxxxx	0.2	xxxxx	xxxxx	0.2	xxxxx	xxxxx	xxxx	xxxxx	xxxxx	xxxx	xxxxx												
Shrd StpDel:	xxxxx	11.6	xxxxx	xxxxx	9.8	xxxxx	xxxxx	xxxx	xxxxx	xxxxx	xxxx	xxxxx												
Shared LOS:	*	B	*	*	A	*	*	*	*	*	*	*												
ApproachDel:	11.6				9.8		xxxxxx				xxxxxx													
ApproachLOS:	B				A		*				*													

Wilson Creek Estates
Traffic Impact Analysis

Level Of Service Computation Report
2000 HCM Unsignalized Method (Future Volume Alternative)

Intersection #6 Oak Glen Rd & Casa Blance Rd

Average Delay (sec/veh): 2.4 Worst Case Level Of Service: B[10.5]

Approach:	North Bound					South Bound					East Bound					West Bound				
Movement:	L	-	T	-	R	L	-	T	-	R	L	-	T	-	R	L	-	T	-	R
Control:	Stop Sign					Stop Sign					Uncontrolled					Uncontrolled				
Rights:	Include					Include					Include					Include				
Lanes:	1	0	0	0	0	0	0	0	0	1	0	0	1!	0	0	0	0	1	0	0
Volume Module:																				
Base Vol:	56	0	0	0	0	0	0	0	0	0	0	66	15	0	0	0	119	0		
Growth Adj:	1.00	1.00	1.00	1.00	1.00	1.00	1.00	1.00	1.00	1.00	1.00	1.00	1.00	1.00	1.00	1.00	1.00	1.00		
Initial Bse:	56	0	0	0	0	0	0	0	0	0	0	66	15	0	0	0	119	0		
Added Vol:	0	0	0	0	0	0	0	0	0	12	0	4	7	0	0	0	20	0		
PasserByVol:	0	0	0	0	0	0	0	0	0	0	0	0	0	0	0	0	0	0		
Initial Fut:	56	0	0	0	0	0	0	0	0	12	0	4	73	0	0	0	139	0		
User Adj:	1.00	1.00	1.00	1.00	1.00	1.00	1.00	1.00	1.00	1.00	1.00	1.00	1.00	1.00	1.00	1.00	1.00	1.00		
PHF Adj:	1.00	1.00	1.00	1.00	1.00	1.00	1.00	1.00	1.00	1.00	1.00	1.00	1.00	1.00	1.00	1.00	1.00	1.00		
PHF Volume:	56	0	0	0	0	0	0	0	0	12	0	4	73	0	0	0	139	0		
Reduct Vol:	0	0	0	0	0	0	0	0	0	0	0	0	0	0	0	0	0	0		
Final Vol.:	56	0	0	0	0	0	0	0	0	12	0	4	73	0	0	0	139	0		
Critical Gap Module:																				
Critical Gp:	7.1	xxxx	xxxxx	xxxxx	xxxx	6.2	4.1	xxxx	xxxxx	xxxxx	xxxx	xxxxx								
FollowUpTim:	3.5	xxxx	xxxxx	xxxxx	xxxx	3.3	2.2	xxxx	xxxxx	xxxxx	xxxx	xxxxx								
Capacity Module:																				
Cnflict Vol:	234	xxxx	xxxxx	xxxx	xxxx	139	139	xxxx	xxxxx	xxxx	xxxx	xxxxx								
Potent Cap.:	725	xxxx	xxxxx	xxxx	xxxx	915	1457	xxxx	xxxxx	xxxx	xxxx	xxxxx								
Move Cap.:	714	xxxx	xxxxx	xxxx	xxxx	915	1457	xxxx	xxxxx	xxxx	xxxx	xxxxx								
Volume/Cap:	0.08	xxxx	xxxx	xxxx	xxxx	0.01	0.00	xxxx	xxxx	xxxx	xxxx	xxxx								
Level Of Service Module:																				
Queue:	0.3	xxxx	xxxxx	xxxxx	xxxx	0.0	0.0	xxxx	xxxxx	xxxxx	xxxx	xxxxx								
Stopped Del:	10.5	xxxx	xxxxx	xxxxx	xxxx	9.0	7.5	xxxx	xxxxx	xxxxx	xxxx	xxxxx								
LOS by Move:	B	*	*	*	*	A	A	*	*	*	*	*								
Movement:	LT	-	LTR	-	RT	LT	-	LTR	-	RT	LT	-	LTR	-	RT	LT	-	LTR	-	RT
Shared Cap.:	xxxx	xxxx	xxxxx	xxxx	xxxx	xxxxx	xxxx	xxxx	xxxxx	xxxx	xxxx	xxxxx								
SharedQueue:	xxxxx	xxxx	xxxxx	xxxxx	xxxx	xxxxx	xxxxx	xxxx	xxxxx	xxxxx	xxxx	xxxxx								
Shrd StpDel:	xxxxx	xxxx	xxxxx	xxxxx	xxxx	xxxxx	xxxxx	xxxx	xxxxx	xxxxx	xxxx	xxxxx								
Shared LOS:	*	*	*	*	*	*	*	*	*	*	*	*								
ApproachDel:	10.5					9.0					xxxxxx					xxxxxx				
ApproachLOS:	B					A					*					*				

Wilson Creek Estates
Traffic Impact Analysis

Level Of Service Computation Report
2000 HCM Unsignalized Method (Future Volume Alternative)

Intersection #7 Oak Glen Rd & Cherry Croft Rd

Average Delay (sec/veh): 0.1 Worst Case Level Of Service: A[9.9]

Approach:	North Bound					South Bound					East Bound					West Bound				
Movement:	L	-	T	-	R	L	-	T	-	R	L	-	T	-	R	L	-	T	-	R
Control:	Stop Sign					Stop Sign					Uncontrolled					Uncontrolled				
Rights:	Include					Include					Include					Include				
Lanes:	0	0	0	0	0	0	0	0	0	1	1	0	1	0	0	0	0	1	0	0
Volume Module:																				
Base Vol:	0	0	0	0	0	2	0	90	0	0	216	0								
Growth Adj:	1.00	1.00	1.00	1.00	1.00	1.00	1.00	1.00	1.00	1.00	1.00	1.00								
Initial Bse:	0	0	0	0	0	2	0	90	0	0	216	0								
Added Vol:	0	0	0	0	0	3	1	28	0	0	83	0								
PasserByVol:	0	0	0	0	0	0	0	0	0	0	0	0								
Initial Fut:	0	0	0	0	0	5	1	118	0	0	299	0								
User Adj:	1.00	1.00	1.00	1.00	1.00	1.00	1.00	1.00	1.00	1.00	1.00	1.00								
PHF Adj:	1.00	1.00	1.00	1.00	1.00	1.00	1.00	1.00	1.00	1.00	1.00	1.00								
PHF Volume:	0	0	0	0	0	5	1	118	0	0	299	0								
Reduct Vol:	0	0	0	0	0	0	0	0	0	0	0	0								
Final Vol.:	0	0	0	0	0	5	1	118	0	0	299	0								
Critical Gap Module:																				
Critical Gp:	xxxxx	xxxx	xxxxx	xxxxx	xxxx	6.2	4.1	xxxx	xxxxx	xxxxx	xxxx	xxxxx								
FollowUpTim:	xxxxx	xxxx	xxxxx	xxxxx	xxxx	3.3	2.2	xxxx	xxxxx	xxxxx	xxxx	xxxxx								
Capacity Module:																				
Cnflict Vol:	xxxx	xxxx	xxxxx	xxxx	xxxx	299	299	xxxx	xxxxx	xxxx	xxxx	xxxxx								
Potent Cap.:	xxxx	xxxx	xxxxx	xxxx	xxxx	745	1274	xxxx	xxxxx	xxxx	xxxx	xxxxx								
Move Cap.:	xxxx	xxxx	xxxxx	xxxx	xxxx	745	1274	xxxx	xxxxx	xxxx	xxxx	xxxxx								
Volume/Cap:	xxxx	xxxx	xxxx	xxxx	xxxx	0.01	0.00	xxxx	xxxx	xxxx	xxxx	xxxx								
Level Of Service Module:																				
Queue:	xxxxx	xxxx	xxxxx	xxxxx	xxxx	0.0	0.0	xxxx	xxxxx	xxxxx	xxxx	xxxxx								
Stopped Del:	xxxxx	xxxx	xxxxx	xxxxx	xxxx	9.9	7.8	xxxx	xxxxx	xxxxx	xxxx	xxxxx								
LOS by Move:	*	*	*	*	*	A	A	*	*	*	*	*								
Movement:	LT - LTR - RT					LT - LTR - RT					LT - LTR - RT					LT - LTR - RT				
Shared Cap.:	xxxx	xxxx	xxxxx	xxxx	xxxx	xxxxx	xxxx	xxxx	xxxxx	xxxx	xxxx	xxxxx								
SharedQueue:	xxxxx	xxxx	xxxxx	xxxxx	xxxx	xxxxx	xxxxx	xxxx	xxxxx	xxxxx	xxxx	xxxxx								
Shrd StpDel:	xxxxx	xxxx	xxxxx	xxxxx	xxxx	xxxxx	xxxxx	xxxx	xxxxx	xxxxx	xxxx	xxxxx								
Shared LOS:	*	*	*	*	*	*	*	*	*	*	*	*								
ApproachDel:	xxxxxx					9.9			xxxxxx				xxxxxx							
ApproachLOS:	*					A			*				*							

Wilson Creek Estates
Traffic Impact Analysis

Level Of Service Computation Report
2000 HCM Unsignalized Method (Future Volume Alternative)

Intersection #8 Pendleton Rd & Date Ave

Average Delay (sec/veh): 4.7 Worst Case Level Of Service: A[8.4]

Approach:	North Bound						South Bound						East Bound						West Bound					
Movement:	L	-	T	-	R		L	-	T	-	R		L	-	T	-	R		L	-	T	-	R	
Control:	Uncontrolled						Uncontrolled						Stop Sign						Stop Sign					
Rights:	Include						Include						Include						Include					
Lanes:	0	1	0	0	0		0	0	0	0	1		0	0	1!	0	0		0	0	1!	0	0	
Volume Module:																								
Base Vol:	3	2	0	0	0		20	27	0	2	0		0	0	0									
Growth Adj:	1.00	1.00	1.00	1.00	1.00		1.00	1.00	1.00	1.00	1.00		1.00	1.00	1.00									
Initial Bse:	3	2	0	0	0		20	27	0	2	0		0	0	0									
Added Vol:	0	0	0	0	0		3	1	0	0	0		0	0	0									
PasserByVol:	0	0	0	0	0		0	0	0	0	0		0	0	0									
Initial Fut:	3	2	0	0	0		23	28	0	2	0		0	0	0									
User Adj:	1.00	1.00	1.00	1.00	1.00		1.00	1.00	1.00	1.00	1.00		1.00	1.00	1.00									
PHF Adj:	1.00	1.00	1.00	1.00	1.00		1.00	1.00	1.00	1.00	1.00		1.00	1.00	1.00									
PHF Volume:	3	2	0	0	0		23	28	0	2	0		0	0	0									
Reduct Vol:	0	0	0	0	0		0	0	0	0	0		0	0	0									
Final Vol.:	3	2	0	0	0		23	28	0	2	0		0	0	0									
Critical Gap Module:																								
Critical Gp:	4.1	xxxx	xxxxx	xxxxx	xxxx		xxxxx	6.4	xxxx	6.2	xxxxx		xxxx	xxxxx										
FollowUpTim:	2.2	xxxx	xxxxx	xxxxx	xxxx		xxxxx	3.5	xxxx	3.3	xxxxx		xxxx	xxxxx										
Capacity Module:																								
Cnflict Vol:	23	xxxx	xxxxx	xxxx	xxxx		xxxxx	8	xxxx	0	xxxx		xxxx	xxxxx										
Potent Cap.:	1605	xxxx	xxxxx	xxxx	xxxx		xxxxx	1018	xxxx	0	xxxx		xxxx	xxxxx										
Move Cap.:	1605	xxxx	xxxxx	xxxx	xxxx		xxxxx	1017	xxxx	0	xxxx		xxxx	xxxxx										
Volume/Cap:	0.00	xxxx	xxxx	xxxx	xxxx		xxxx	0.03	xxxx	0.00	xxxx		xxxx	xxxx										
Level Of Service Module:																								
Queue:	0.0	xxxx	xxxxx	xxxxx	xxxx		xxxxx	xxxxx	xxxx	xxxxx	xxxxx		xxxx	xxxxx										
Stopped Del:	7.2	xxxx	xxxxx	xxxxx	xxxx		xxxxx	xxxxx	xxxx	xxxxx	xxxxx		xxxx	xxxxx										
LOS by Move:	A	*	*	*	*		*	*	*	*	*		*	*										
Movement:	LT	-	LTR	-	RT		LT	-	LTR	-	RT		LT	-	LTR	-	RT		LT	-	LTR	-	RT	
Shared Cap.:	xxxx	xxxx	xxxxx	xxxx	xxxx		xxxxx	xxxx	1089	xxxxx	xxxx		0	xxxxx										
SharedQueue:	0.0	xxxx	xxxxx	xxxxx	xxxx		xxxxx	xxxxx	0.1	xxxxx	xxxxx		xxxx	xxxxx										
Shrd StpDel:	7.2	xxxx	xxxxx	xxxxx	xxxx		xxxxx	xxxxx	8.4	xxxxx	xxxxx		xxxx	xxxxx										
Shared LOS:	A	*	*	*	*		*	*	A	*	*		*	*										
ApproachDel:	xxxxxx			xxxxxx					8.4				xxxxxx											
ApproachLOS:	*			*					A				*											

Wilson Creek Estates
Traffic Impact Analysis

Level Of Service Computation Report
2000 HCM Unsignalized Method (Future Volume Alternative)

Intersection #9 Jefferson St & Fir Ave

Average Delay (sec/veh): 4.7 Worst Case Level Of Service: A[8.3]

Approach:	North Bound					South Bound					East Bound					West Bound				
Movement:	L	-	T	-	R	L	-	T	-	R	L	-	T	-	R	L	-	T	-	R
Control:	Uncontrolled					Uncontrolled					Stop Sign					Stop Sign				
Rights:	Include					Include					Include					Include				
Lanes:	0	1	0	0	0	0	0	1	0	0	0	0	0	0	1	0	0	0	0	0
Volume Module:																				
Base Vol:	0	0	0	0	0	0	0	0	0	0	0	0	0	0	0	0	0	0	0	0
Growth Adj:	1.00	1.00	1.00	1.00	1.00	1.00	1.00	1.00	1.00	1.00	1.00	1.00	1.00	1.00	1.00	1.00	1.00	1.00	1.00	1.00
Initial Bse:	0	0	0	0	0	0	0	0	0	0	0	0	0	0	0	0	0	0	0	0
Added Vol:	9	5	0	0	2	0	0	0	3	0	0	0	0	0	0	0	0	0	0	0
PasserByVol:	0	0	0	0	0	0	0	0	0	0	0	0	0	0	0	0	0	0	0	0
Initial Fut:	9	5	0	0	2	0	0	0	3	0	0	0	0	0	0	0	0	0	0	0
User Adj:	1.00	1.00	1.00	1.00	1.00	1.00	1.00	1.00	1.00	1.00	1.00	1.00	1.00	1.00	1.00	1.00	1.00	1.00	1.00	1.00
PHF Adj:	1.00	1.00	1.00	1.00	1.00	1.00	1.00	1.00	1.00	1.00	1.00	1.00	1.00	1.00	1.00	1.00	1.00	1.00	1.00	1.00
PHF Volume:	9	5	0	0	2	0	0	0	3	0	0	0	0	0	0	0	0	0	0	0
Reduct Vol:	0	0	0	0	0	0	0	0	0	0	0	0	0	0	0	0	0	0	0	0
Final Vol.:	9	5	0	0	2	0	0	0	3	0	0	0	0	0	0	0	0	0	0	0
Critical Gap Module:																				
Critical Gp:	4.1	xxxx	xxxxx	xxxxx	xxxx	xxxxx	xxxxx	xxxx		6.2	xxxxx	xxxx	xxxxx							
FollowUpTim:	2.2	xxxx	xxxxx	xxxxx	xxxx	xxxxx	xxxxx	xxxx		3.3	xxxxx	xxxx	xxxxx							
Capacity Module:																				
Cnflict Vol:	2	xxxx	xxxxx	xxxx	xxxx	xxxxx	xxxx	xxxx		2	xxxx	xxxx	xxxxx							
Potent Cap.:	1634	xxxx	xxxxx	xxxx	xxxx	xxxxx	xxxx	xxxx		1088	xxxx	xxxx	xxxxx							
Move Cap.:	1634	xxxx	xxxxx	xxxx	xxxx	xxxxx	xxxx	xxxx		1088	xxxx	xxxx	xxxxx							
Volume/Cap:	0.01	xxxx	xxxx	xxxx	xxxx	xxxx	xxxx	xxxx		0.00	xxxx	xxxx	xxxx							
Level Of Service Module:																				
Queue:	0.0	xxxx	xxxxx	xxxxx	xxxx	xxxxx	xxxxx	xxxx		0.0	xxxxx	xxxx	xxxxx							
Stopped Del:	7.2	xxxx	xxxxx	xxxxx	xxxx	xxxxx	xxxxx	xxxx		8.3	xxxxx	xxxx	xxxxx							
LOS by Move:	A	*	*	*	*	*	*	*		A	*	*	*							
Movement:	LT	-	LTR	-	RT	LT	-	LTR	-	RT	LT	-	LTR	-	RT	LT	-	LTR	-	RT
Shared Cap.:	xxxx	xxxx	xxxxx	xxxx	xxxx	xxxxx	xxxx	xxxx	xxxxx		xxxx	xxxx	xxxxx							
SharedQueue:	0.0	xxxx	xxxxx	xxxxx	xxxx	xxxxx	xxxxx	xxxx	xxxxx		xxxxx	xxxx	xxxxx							
Shrd StpDel:	7.2	xxxx	xxxxx	xxxxx	xxxx	xxxxx	xxxxx	xxxx	xxxxx		xxxxx	xxxx	xxxxx							
Shared LOS:	A	*	*	*	*	*	*	*	*		*	*	*							
ApproachDel:	xxxxxx			xxxxxx				8.3			xxxxxx									
ApproachLOS:	*			*				A			*									

Wilson Creek Estates
Traffic Impact Analysis

Level Of Service Computation Report
2000 HCM Unsignalized Method (Future Volume Alternative)

Intersection #10 Jefferson St & Cherry Croft (B St)

Average Delay (sec/veh): 4.0 Worst Case Level Of Service: A[9.3]

Approach:	North Bound					South Bound					East Bound					West Bound				
Movement:	L	-	T	-	R	L	-	T	-	R	L	-	T	-	R	L	-	T	-	R
Control:	Uncontrolled					Uncontrolled					Stop Sign					Stop Sign				
Rights:	Include					Include					Include					Include				
Lanes:	0	0	0	1	0	0	1	0	0	0	0	0	1	0	0	0	0	1!	0	0
Volume Module:																				
Base Vol:	0	0	0	0	0	0	0	0	0	0	0	0	0	0	0	0	0	0	0	0
Growth Adj:	1.00	1.00	1.00	1.00	1.00	1.00	1.00	1.00	1.00	1.00	1.00	1.00	1.00	1.00	1.00	1.00	1.00	1.00	1.00	1.00
Initial Bse:	0	0	0	0	0	0	0	0	0	0	0	0	0	0	0	0	0	0	0	0
Added Vol:	0	12	8	4	31	0	0	1	0	25	3	11								
PasserByVol:	0	0	0	0	0	0	0	0	0	0	0	0								
Initial Fut:	0	12	8	4	31	0	0	1	0	25	3	11								
User Adj:	1.00	1.00	1.00	1.00	1.00	1.00	1.00	1.00	1.00	1.00	1.00	1.00								
PHF Adj:	1.00	1.00	1.00	1.00	1.00	1.00	1.00	1.00	1.00	1.00	1.00	1.00								
PHF Volume:	0	12	8	4	31	0	0	1	0	25	3	11								
Reduct Vol:	0	0	0	0	0	0	0	0	0	0	0	0								
Final Vol.:	0	12	8	4	31	0	0	1	0	25	3	11								
Critical Gap Module:																				
Critical Gp:	xxxxx	xxxx	xxxxx	4.1	xxxx	xxxxx	xxxxx	6.5	xxxxx	7.1	6.5	6.2								
FollowUpTim:	xxxxx	xxxx	xxxxx	2.2	xxxx	xxxxx	xxxxx	4.0	xxxxx	3.5	4.0	3.3								
Capacity Module:																				
Cnflict Vol:	xxxx	xxxx	xxxxx	20	xxxx	xxxxx	xxxx	59	xxxxx	56	55	16								
Potent Cap.:	xxxx	xxxx	xxxxx	1609	xxxx	xxxxx	xxxx	836	xxxxx	947	840	1069								
Move Cap.:	xxxx	xxxx	xxxxx	1609	xxxx	xxxxx	xxxx	834	xxxxx	944	838	1069								
Volume/Cap:	xxxx	xxxx	xxxx	0.00	xxxx	xxxx	xxxx	0.00	xxxx	0.03	0.00	0.01								
Level Of Service Module:																				
Queue:	xxxxx	xxxx	xxxxx	0.0	xxxx	xxxxx	xxxxx	0.0	xxxxx	xxxxx	xxxx	xxxxx								
Stopped Del:	xxxxx	xxxx	xxxxx	7.2	xxxx	xxxxx	xxxxx	9.3	xxxxx	xxxxx	xxxx	xxxxx								
LOS by Move:	*	*	*	A	*	*	*	A	*	*	*	*								
Movement:	LT	-	LTR	-	RT	LT	-	LTR	-	RT	LT	-	LTR	-	RT					
Shared Cap.:	xxxx	xxxx	xxxxx	xxxx	xxxx	xxxxx	xxxx	xxxx	xxxxx	xxxx	967	xxxxx								
SharedQueue:	xxxxx	xxxx	xxxxx	0.0	xxxx	xxxxx	xxxxx	xxxx	xxxxx	xxxxx	0.1	xxxxx								
Shrd StpDel:	xxxxx	xxxx	xxxxx	7.2	xxxx	xxxxx	xxxxx	xxxx	xxxxx	xxxxx	8.9	xxxxx								
Shared LOS:	*	*	*	A	*	*	*	*	*	*	A	*								
ApproachDel:	xxxxxx			xxxxxx			9.3			8.9										
ApproachLOS:	*			*			A			A										

Wilson Creek Estates
Traffic Impact Analysis

Level Of Service Computation Report
2000 HCM Unsignalized Method (Future Volume Alternative)

Intersection #11 Oak Glen Rd & O St

Average Delay (sec/veh): 1.1 Worst Case Level Of Service: A[8.9]

Approach:	North Bound				South Bound				East Bound				West Bound			
Movement:	L	- T	- R		L	- T	- R		L	- T	- R		L	- T	- R	
Control:	Stop Sign				Stop Sign				Uncontrolled				Uncontrolled			
Rights:	Include				Include				Include				Include			
Lanes:	0	0	1!	0 0	0	0	0	0 1	0	1	0	0 0	0	0	1	0 0
Volume Module:																
Base Vol:	0	0	0	0	0	0	0	0	0	66	0	0	0	119	0	
Growth Adj:	1.00	1.00	1.00	1.00	1.00	1.00	1.00	1.00	1.00	1.00	1.00	1.00	1.00	1.00	1.00	
Initial Bse:	0	0	0	0	0	0	0	0	0	66	0	0	0	119	0	
Added Vol:	0	0	0	0	0	0	20	0	7	0	0	0	0	0	0	
PasserByVol:	0	0	0	0	0	0	0	0	0	0	0	0	0	0	0	
Initial Fut:	0	0	0	0	0	0	20	0	7	66	0	0	0	119	0	
User Adj:	1.00	1.00	1.00	1.00	1.00	1.00	1.00	1.00	1.00	1.00	1.00	1.00	1.00	1.00	1.00	
PHF Adj:	1.00	1.00	1.00	1.00	1.00	1.00	1.00	1.00	1.00	1.00	1.00	1.00	1.00	1.00	1.00	
PHF Volume:	0	0	0	0	0	0	20	0	7	66	0	0	0	119	0	
Reduct Vol:	0	0	0	0	0	0	0	0	0	0	0	0	0	0	0	
Final Vol.:	0	0	0	0	0	0	20	0	7	66	0	0	0	119	0	
Critical Gap Module:																
Critical Gp:	xxxxx	xxxx	xxxxx	xxxxx	xxxx		6.2		4.1	xxxx	xxxxx	xxxxx	xxxx	xxxxx		
FollowUpTim:	xxxxx	xxxx	xxxxx	xxxxx	xxxx		3.3		2.2	xxxx	xxxxx	xxxxx	xxxx	xxxxx		
Capacity Module:																
Cnflict Vol:	xxxx	xxxx	xxxxx	xxxx	xxxx		119		119	xxxx	xxxxx	xxxx	xxxx	xxxxx		
Potent Cap.:	xxxx	xxxx	xxxxx	xxxx	xxxx		938		1482	xxxx	xxxxx	xxxx	xxxx	xxxxx		
Move Cap.:	xxxx	xxxx	xxxxx	xxxx	xxxx		938		1482	xxxx	xxxxx	xxxx	xxxx	xxxxx		
Volume/Cap:	xxxx	xxxx	xxxx	xxxx	xxxx		0.02		0.00	xxxx	xxxx	xxxx	xxxx	xxxx		
Level Of Service Module:																
Queue:	xxxxx	xxxx	xxxxx	xxxxx	xxxx		0.1		0.0	xxxx	xxxxx	xxxxx	xxxx	xxxxx		
Stopped Del:	xxxxx	xxxx	xxxxx	xxxxx	xxxx		8.9		7.4	xxxx	xxxxx	xxxxx	xxxx	xxxxx		
LOS by Move:	*	*	*	*	*		A		A	*	*	*	*	*		
Movement:	LT -	LTR -	RT	LT -	LTR -	RT	LT -	LTR -	RT	LT -	LTR -	RT	LT -	LTR -	RT	
Shared Cap.:	xxxx	0	xxxxx	xxxx	xxxx	xxxxx	xxxx	xxxx	xxxxx	xxxx	xxxx	xxxxx				
SharedQueue:	xxxxx	xxxx	xxxxx	xxxxx	xxxx	xxxxx	0.0	xxxx	xxxxx	xxxxx	xxxx	xxxxx				
Shrd StpDel:	xxxxx	xxxx	xxxxx	xxxxx	xxxx	xxxxx	7.4	xxxx	xxxxx	xxxxx	xxxx	xxxxx				
Shared LOS:	*	*	*	*	*	*	A	*	*	*	*	*				
ApproachDel:	xxxxxx			8.9			xxxxxx			xxxxxx						
ApproachLOS:	*			A			*			*						

Wilson Creek Estates
Traffic Impact Analysis

Level Of Service Computation Report
2000 HCM Operations Method (Future Volume Alternative)

Intersection #1 Oak Glen Rd & Bryant St

Cycle (sec): 60 Critical Vol./Cap. (X): 0.420
Loss Time (sec): 4 (Y+R = 4 sec) Average Delay (sec/veh): 18.3
Optimal Cycle: 19 Level Of Service: B

Approach:	North Bound			South Bound			East Bound			West Bound		
Movement:	L - T - R			L - T - R			L - T - R			L - T - R		
Control:	Protected			Protected			Protected			Protected		
Rights:	Include			Include			Include			Include		
Min. Green:	0	0	0	0	0	0	0	0	0	0	0	0
Lanes:	1 0 2 0 1			1 0 2 0 1			1 0 1 0 1			1 0 1 0 1		
Volume Module:												
Base Vol:	151	305	71	61	392	172	237	148	194	71	94	96
Growth Adj:	1.00	1.00	1.00	1.00	1.00	1.00	1.00	1.00	1.00	1.00	1.00	1.00
Initial Bse:	151	305	71	61	392	172	237	148	194	71	94	96
Added Vol:	0	4	50	0	3	4	6	46	0	30	28	0
PasserByVol:	0	0	0	0	0	0	0	0	0	0	0	0
Initial Fut:	151	309	121	61	395	176	243	194	194	101	122	96
User Adj:	1.00	1.00	1.00	1.00	1.00	1.00	1.00	1.00	1.00	1.00	1.00	1.00
PHF Adj:	1.00	1.00	1.00	1.00	1.00	1.00	1.00	1.00	1.00	1.00	1.00	1.00
PHF Volume:	151	309	121	61	395	176	243	194	194	101	122	96
Reduct Vol:	0	0	0	0	0	0	0	0	0	0	0	0
Reduced Vol:	151	309	121	61	395	176	243	194	194	101	122	96
PCE Adj:	1.00	1.00	1.00	1.00	1.00	1.00	1.00	1.00	1.00	1.00	1.00	1.00
MLF Adj:	1.00	1.00	1.00	1.00	1.00	1.00	1.00	1.00	1.00	1.00	1.00	1.00
Final Vol.:	151	309	121	61	395	176	243	194	194	101	122	96
Saturation Flow Module:												
Sat/Lane:	1900	1900	1900	1900	1900	1900	1900	1900	1900	1900	1900	1900
Adjustment:	0.95	0.95	1.00	0.95	0.95	1.00	0.95	1.00	1.00	0.95	1.00	1.00
Lanes:	1.00	2.00	1.00	1.00	2.00	1.00	1.00	1.00	1.00	1.00	1.00	1.00
Final Sat.:	1805	3610	1900	1805	3610	1900	1805	1900	1900	1805	1900	1900
Capacity Analysis Module:												
Vol/Sat:	0.08	0.09	0.06	0.03	0.11	0.09	0.13	0.10	0.10	0.06	0.06	0.05
Crit Moves:	****				****		****				****	
Green/Cycle:	0.20	0.33	0.33	0.13	0.26	0.26	0.32	0.31	0.31	0.17	0.15	0.15
Volume/Cap:	0.42	0.26	0.19	0.26	0.42	0.36	0.42	0.33	0.33	0.33	0.42	0.33
Delay/Veh:	21.8	14.9	14.5	24.1	18.7	18.5	16.5	16.4	16.4	22.7	24.0	23.3
User DelAdj:	1.00	1.00	1.00	1.00	1.00	1.00	1.00	1.00	1.00	1.00	1.00	1.00
AdjDel/Veh:	21.8	14.9	14.5	24.1	18.7	18.5	16.5	16.4	16.4	22.7	24.0	23.3
HCM2kAvg:	3	2	2	1	3	3	4	3	3	2	3	2

Wilson Creek Estates
Traffic Impact Analysis

Level Of Service Computation Report
2000 HCM Operations Method (Future Volume Alternative)

Intersection #2 Bryant St & Fir Ave

Cycle (sec): 60 Critical Vol./Cap. (X): 0.224
Loss Time (sec): 4 (Y+R = 4 sec) Average Delay (sec/veh): 3.4
Optimal Cycle: 15 Level Of Service: A

Approach:	North Bound			South Bound			East Bound			West Bound		
Movement:	L - T - R			L - T - R			L - T - R			L - T - R		
Control:	Permitted			Permitted			Permitted			Permitted		
Rights:	Include			Include			Include			Include		
Min. Green:	0	0	0	0	0	0	0	0	0	0	0	0
Lanes:	1 0 2	0 1		1 0 1	1 0		0 0 1!	0 0		0 0 1!	0 0	
Volume Module:												
Base Vol:	45	530	49	5	607	24	15	6	43	30	2	5
Growth Adj:	1.00	1.00	1.00	1.00	1.00	1.00	1.00	1.00	1.00	1.00	1.00	1.00
Initial Bse:	45	530	49	5	607	24	15	6	43	30	2	5
Added Vol:	0	0	10	0	0	0	0	0	0	6	0	0
PasserByVol:	0	0	0	0	0	0	0	0	0	0	0	0
Initial Fut:	45	530	59	5	607	24	15	6	43	36	2	5
User Adj:	1.00	1.00	1.00	1.00	1.00	1.00	1.00	1.00	1.00	1.00	1.00	1.00
PHF Adj:	1.00	1.00	1.00	1.00	1.00	1.00	1.00	1.00	1.00	1.00	1.00	1.00
PHF Volume:	45	530	59	5	607	24	15	6	43	36	2	5
Reduct Vol:	0	0	0	0	0	0	0	0	0	0	0	0
Reduced Vol:	45	530	59	5	607	24	15	6	43	36	2	5
PCE Adj:	1.00	1.00	1.00	1.00	1.00	1.00	1.00	1.00	1.00	1.00	1.00	1.00
MLF Adj:	1.00	1.00	1.00	1.00	1.00	1.00	1.00	1.00	1.00	1.00	1.00	1.00
Final Vol.:	45	530	59	5	607	24	15	6	43	36	2	5
Saturation Flow Module:												
Sat/Lane:	1900	1900	1900	1900	1900	1900	1900	1900	1900	1900	1900	1900
Adjustment:	0.95	0.95	1.00	0.95	0.95	0.95	0.95	1.00	1.00	0.95	1.00	1.00
Lanes:	1.00	2.00	1.00	1.00	1.92	0.08	0.24	0.09	0.67	0.85	0.04	0.11
Final Sat.:	1805	3610	1900	1805	3473	137	440	176	1261	1524	85	212
Capacity Analysis Module:												
Vol/Sat:	0.02	0.15	0.03	0.00	0.17	0.17	0.03	0.03	0.03	0.02	0.02	0.02
Crit Moves:					****			****				
Green/Cycle:	0.78	0.78	0.78	0.78	0.78	0.78	0.15	0.15	0.15	0.15	0.15	0.15
Volume/Cap:	0.03	0.19	0.04	0.00	0.22	0.22	0.22	0.22	0.22	0.16	0.16	0.16
Delay/Veh:	1.5	1.7	1.5	1.4	1.8	1.8	22.7	22.7	22.7	22.3	22.3	22.3
User DelAdj:	1.00	1.00	1.00	1.00	1.00	1.00	1.00	1.00	1.00	1.00	1.00	1.00
AdjDel/Veh:	1.5	1.7	1.5	1.4	1.8	1.8	22.7	22.7	22.7	22.3	22.3	22.3
HCM2kAvg:	0	1	0	0	2	2	1	1	1	1	1	1

Wilson Creek Estates
Traffic Impact Analysis

Level Of Service Computation Report
2000 HCM Unsignalized Method (Future Volume Alternative)

Intersection #3 Bryant St & Carter St

Average Delay (sec/veh): 2.5 Worst Case Level Of Service: D[31.5]

Approach:	North Bound						South Bound						East Bound						West Bound					
Movement:	L	-	T	-	R		L	-	T	-	R		L	-	T	-	R		L	-	T	-	R	
Control:	Uncontrolled						Uncontrolled						Stop Sign						Stop Sign					
Rights:	Include						Include						Include						Include					
Lanes:	1	0	0	1	0		1	0	0	1	0		0	0	1!	0	0		0	0	1!	0	0	
Volume Module:																								
Base Vol:	27	399		53			38	551		6			5		0		18		51		0		11	
Growth Adj:	1.00	1.00		1.00			1.00	1.00		1.00			1.00		1.00		1.00		1.00		1.00		1.00	
Initial Bse:	27	399		53			38	551		6			5		0		18		51		0		11	
Added Vol:	0	0		0			0	0		0			0		0		0		0		0		0	
PasserByVol:	0	0		0			0	0		0			0		0		0		0		0		0	
Initial Fut:	27	399		53			38	551		6			5		0		18		51		0		11	
User Adj:	1.00	1.00		1.00			1.00	1.00		1.00			1.00		1.00		1.00		1.00		1.00		1.00	
PHF Adj:	1.00	1.00		1.00			1.00	1.00		1.00			1.00		1.00		1.00		1.00		1.00		1.00	
PHF Volume:	27	399		53			38	551		6			5		0		18		51		0		11	
Reduct Vol:	0	0		0			0	0		0			0		0		0		0		0		0	
Final Vol.:	27	399		53			38	551		6			5		0		18		51		0		11	
Critical Gap Module:																								
Critical Gp:	4.1	xxxx	xxxxx				4.1	xxxx	xxxxx				7.1	xxxx			6.2		7.1	xxxx			6.2	
FollowUpTim:	2.2	xxxx	xxxxx				2.2	xxxx	xxxxx				3.5	xxxx			3.3		3.5	xxxx			3.3	
Capacity Module:																								
Cnflict Vol:	557	xxxx	xxxxx				452	xxxx	xxxxx				1115	xxxx			554		1119	xxxx			426	
Potent Cap.:	1024	xxxx	xxxxx				1119	xxxx	xxxxx				187	xxxx			536		186	xxxx			633	
Move Cap.:	1024	xxxx	xxxxx				1119	xxxx	xxxxx				175	xxxx			536		171	xxxx			633	
Volume/Cap:	0.03	xxxx	xxxx				0.03	xxxx	xxxx				0.03	xxxx			0.03		0.30	xxxx			0.02	
Level Of Service Module:																								
Queue:	0.1	xxxx	xxxxx				0.1	xxxx	xxxxx				xxxxx	xxxx			xxxxx		xxxxx	xxxx			xxxxx	
Stopped Del:	8.6	xxxx	xxxxx				8.3	xxxx	xxxxx				xxxxx	xxxx			xxxxx		xxxxx	xxxx			xxxxx	
LOS by Move:	A	*	*				A	*	*				*	*			*		*	*			*	
Movement:	LT	-	LTR	-	RT		LT	-	LTR	-	RT		LT	-	LTR	-	RT		LT	-	LTR	-	RT	
Shared Cap.:	xxxx	xxxx	xxxxx				xxxx	xxxx	xxxxx				xxxx		370		xxxxx		xxxx		197		xxxxx	
SharedQueue:	xxxxx	xxxx	xxxxx				xxxxx	xxxx	xxxxx				xxxxx		0.2		xxxxx		xxxxx		1.3		xxxxx	
Shrd StpDel:	xxxxx	xxxx	xxxxx				xxxxx	xxxx	xxxxx				xxxxx		15.4		xxxxx		xxxxx		31.5		xxxxx	
Shared LOS:	*	*	*				*	*	*				*		C		*		*		D		*	
ApproachDel:	xxxxxx						xxxxxx						15.4						31.5					
ApproachLOS:	*						*						C						D					

Wilson Creek Estates
Traffic Impact Analysis

Level Of Service Computation Report
2000 HCM Unsignalized Method (Future Volume Alternative)

Intersection #4 Carter St & Jefferson St

Average Delay (sec/veh): 2.8 Worst Case Level Of Service: A[9.1]

Approach:	North Bound					South Bound					East Bound					West Bound				
Movement:	L	-	T	-	R	L	-	T	-	R	L	-	T	-	R	L	-	T	-	R
Control:	Stop Sign					Stop Sign					Uncontrolled					Uncontrolled				
Rights:	Include					Include					Include					Include				
Lanes:	0	1	0	0	0	0	0	0	1	0	0	0	1!	0	0	0	0	1	0	0
Volume Module:																				
Base Vol:	3	0	0	0	2	2	2	21	3	0	14	0								
Growth Adj:	1.00	1.00	1.00	1.00	1.00	1.00	1.00	1.00	1.00	1.00	1.00	1.00								
Initial Bse:	3	0	0	0	2	2	2	21	3	0	14	0								
Added Vol:	0	3	0	0	6	0	0	0	0	0	0	0								
PasserByVol:	0	0	0	0	0	0	0	0	0	0	0	0								
Initial Fut:	3	3	0	0	8	2	2	21	3	0	14	0								
User Adj:	1.00	1.00	1.00	1.00	1.00	1.00	1.00	1.00	1.00	1.00	1.00	1.00								
PHF Adj:	1.00	1.00	1.00	1.00	1.00	1.00	1.00	1.00	1.00	1.00	1.00	1.00								
PHF Volume:	3	3	0	0	8	2	2	21	3	0	14	0								
Reduct Vol:	0	0	0	0	0	0	0	0	0	0	0	0								
Final Vol.:	3	3	0	0	8	2	2	21	3	0	14	0								
Critical Gap Module:																				
Critical Gp:	7.1	6.5	xxxxx	xxxxx	6.5	6.2	4.1	xxxx	xxxxx	xxxxx	xxxx	xxxxx								
FollowUpTim:	3.5	4.0	xxxxx	xxxxx	4.0	3.3	2.2	xxxx	xxxxx	xxxxx	xxxx	xxxxx								
Capacity Module:																				
Cnflict Vol:	46	41	xxxxx	xxxx	42	14	14	xxxx	xxxxx	xxxx	xxxx	xxxxx								
Potent Cap.:	961	855	xxxxx	xxxx	854	1072	1617	xxxx	xxxxx	xxxx	xxxx	xxxxx								
Move Cap.:	952	854	xxxxx	xxxx	853	1072	1617	xxxx	xxxxx	xxxx	xxxx	xxxxx								
Volume/Cap:	0.00	0.00	xxxx	xxxx	0.01	0.00	0.00	xxxx	xxxx	xxxx	xxxx	xxxx								
Level Of Service Module:																				
Queue:	xxxxx	xxxx	xxxxx	xxxxx	xxxx	xxxxx	0.0	xxxx	xxxxx	xxxxx	xxxx	xxxxx								
Stopped Del:	xxxxx	xxxx	xxxxx	xxxxx	xxxx	xxxxx	7.2	xxxx	xxxxx	xxxxx	xxxx	xxxxx								
LOS by Move:	*	*	*	*	*	*	A	*	*	*	*	*								
Movement:	LT	-	LTR	-	RT	LT	-	LTR	-	RT	LT	-	LTR	-	RT	LT	-	LTR	-	RT
Shared Cap.:	900	xxxx	xxxxx	xxxx	xxxx	889	xxxx	xxxx	xxxxx	xxxx	xxxx	xxxxx								
SharedQueue:	0.0	xxxx	xxxxx	xxxxx	xxxx	0.0	xxxxx	xxxx	xxxxx	xxxxx	xxxx	xxxxx								
Shrd StpDel:	9.0	xxxx	xxxxx	xxxxx	xxxx	9.1	xxxxx	xxxx	xxxxx	xxxxx	xxxx	xxxxx								
Shared LOS:	A	*	*	*	*	A	*	*	*	*	*	*								
ApproachDel:	9.0					9.1			xxxxxx			xxxxxx								
ApproachLOS:	A					A			*			*								

Wilson Creek Estates
Traffic Impact Analysis

Level Of Service Computation Report
2000 HCM Unsignalized Method (Future Volume Alternative)

Intersection #5 Oak Glen Rd & Pendleton Rd

Average Delay (sec/veh): 2.2 Worst Case Level Of Service: B[12.5]

Approach:	North Bound						South Bound						East Bound						West Bound					
Movement:	L - T - R						L - T - R						L - T - R						L - T - R					
Control:	Stop Sign						Stop Sign						Uncontrolled						Uncontrolled					
Rights:	Include						Include						Include						Include					
Lanes:	0	0	1!	0	0		0	0	1!	0	0		0	0	1!	0	0		0	0	1!	0	0	
Volume Module:																								
Base Vol:	12	0	4		0	0	0		0	159	29		2	131	0									
Growth Adj:	1.00	1.00	1.00		1.00	1.00	1.00		1.00	1.00	1.00		1.00	1.00	1.00									
Initial Bse:	12	0	4		0	0	0		0	159	29		2	131	0									
Added Vol:	0	3	0		2	2	36		59	34	0		0	20	1									
PasserByVol:	0	0	0		0	0	0		0	0	0		0	0	0									
Initial Fut:	12	3	4		2	2	36		59	193	29		2	151	1									
User Adj:	1.00	1.00	1.00		1.00	1.00	1.00		1.00	1.00	1.00		1.00	1.00	1.00									
PHF Adj:	1.00	1.00	1.00		1.00	1.00	1.00		1.00	1.00	1.00		1.00	1.00	1.00									
PHF Volume:	12	3	4		2	2	36		59	193	29		2	151	1									
Reduct Vol:	0	0	0		0	0	0		0	0	0		0	0	0									
Final Vol.:	12	3	4		2	2	36		59	193	29		2	151	1									
Critical Gap Module:																								
Critical Gp:	7.1	6.5	6.2		7.1	6.5	6.2		4.1	xxxx	xxxxx		4.1	xxxx	xxxxx									
FollowUpTim:	3.5	4.0	3.3		3.5	4.0	3.3		2.2	xxxx	xxxxx		2.2	xxxx	xxxxx									
Capacity Module:																								
Cnflict Vol:	500	482	208		485	496	152		152	xxxx	xxxxx		222	xxxx	xxxxx									
Potent Cap.:	484	487	838		496	478	900		1441	xxxx	xxxxx		1359	xxxx	xxxxx									
Move Cap.:	448	466	838		475	457	900		1441	xxxx	xxxxx		1359	xxxx	xxxxx									
Volume/Cap:	0.03	0.01	0.00		0.00	0.00	0.04		0.04	xxxx	xxxx		0.00	xxxx	xxxx									
Level Of Service Module:																								
Queue:	xxxxx	xxxx	xxxxx		xxxxx	xxxx	xxxxx		0.1	xxxx	xxxxx		0.0	xxxx	xxxxx									
Stopped Del:	xxxxx	xxxx	xxxxx		xxxxx	xxxx	xxxxx		7.6	xxxx	xxxxx		7.7	xxxx	xxxxx									
LOS by Move:	*	*	*		*	*	*		A	*	*		A	*	*									
Movement:	LT - LTR - RT				LT - LTR - RT				LT - LTR - RT				LT - LTR - RT											
Shared Cap.:	xxxx	500	xxxxx		xxxx	823	xxxxx		xxxx	xxxx	xxxxx		xxxx	xxxx	xxxxx									
SharedQueue:	xxxxx	0.1	xxxxx		xxxxx	0.2	xxxxx		xxxxx	xxxx	xxxxx		xxxxx	xxxx	xxxxx									
Shrd StpDel:	xxxxx	12.5	xxxxx		xxxxx	9.6	xxxxx		xxxxx	xxxx	xxxxx		xxxxx	xxxx	xxxxx									
Shared LOS:	*	B	*		*	A	*		*	*	*		*	*	*									
ApproachDel:	12.5				9.6				xxxxxx				xxxxxx											
ApproachLOS:	B				A				*				*											

Wilson Creek Estates
Traffic Impact Analysis

Level Of Service Computation Report
2000 HCM Unsignalized Method (Future Volume Alternative)

Intersection #6 Oak Glen Rd & Casa Blance Rd

Average Delay (sec/veh): 1.4 Worst Case Level Of Service: B[10.9]

Approach:	North Bound					South Bound					East Bound					West Bound				
Movement:	L	-	T	-	R	L	-	T	-	R	L	-	T	-	R	L	-	T	-	R
Control:	Stop Sign					Stop Sign					Uncontrolled					Uncontrolled				
Rights:	Include					Include					Include					Include				
Lanes:	1	0	0	0	0	0	0	0	0	1	0	0	1!	0	0	0	1	0	0	0
Volume Module:																				
Base Vol:	30	0	0	0	0	0	0	105	63	2	104	0								
Growth Adj:	1.00	1.00	1.00	1.00	1.00	1.00	1.00	1.00	1.00	1.00	1.00	1.00								
Initial Bse:	30	0	0	0	0	0	0	105	63	2	104	0								
Added Vol:	0	0	0	0	0	8	13	23	0	0	13	0								
PasserByVol:	0	0	0	0	0	0	0	0	0	0	0	0								
Initial Fut:	30	0	0	0	0	8	13	128	63	2	117	0								
User Adj:	1.00	1.00	1.00	1.00	1.00	1.00	1.00	1.00	1.00	1.00	1.00	1.00								
PHF Adj:	1.00	1.00	1.00	1.00	1.00	1.00	1.00	1.00	1.00	1.00	1.00	1.00								
PHF Volume:	30	0	0	0	0	8	13	128	63	2	117	0								
Reduct Vol:	0	0	0	0	0	0	0	0	0	0	0	0								
Final Vol.:	30	0	0	0	0	8	13	128	63	2	117	0								
Critical Gap Module:																				
Critical Gp:	7.1	xxxx	xxxxx	xxxxx	xxxx	6.2	4.1	xxxx	xxxxx	4.1	xxxx	xxxxx								
FollowUpTim:	3.5	xxxx	xxxxx	xxxxx	xxxx	3.3	2.2	xxxx	xxxxx	2.2	xxxx	xxxxx								
Capacity Module:																				
Cnflict Vol:	311	xxxx	xxxxx	xxxx	xxxx	117	117	xxxx	xxxxx	191	xxxx	xxxxx								
Potent Cap.:	646	xxxx	xxxxx	xxxx	xxxx	941	1484	xxxx	xxxxx	1395	xxxx	xxxxx								
Move Cap.:	635	xxxx	xxxxx	xxxx	xxxx	941	1484	xxxx	xxxxx	1395	xxxx	xxxxx								
Volume/Cap:	0.05	xxxx	xxxx	xxxx	xxxx	0.01	0.01	xxxx	xxxx	0.00	xxxx	xxxx								
Level Of Service Module:																				
Queue:	0.1	xxxx	xxxxx	xxxxx	xxxx	0.0	0.0	xxxx	xxxxx	0.0	xxxx	xxxxx								
Stopped Del:	10.9	xxxx	xxxxx	xxxxx	xxxx	8.9	7.4	xxxx	xxxxx	7.6	xxxx	xxxxx								
LOS by Move:	B	*	*	*	*	A	A	*	*	A	*	*								
Movement:	LT	-	LTR	-	RT	LT	-	LTR	-	RT	LT	-	LTR	-	RT	LT	-	LTR	-	RT
Shared Cap.:	xxxx	xxxx	xxxxx	xxxx	xxxx	xxxxx	xxxx	xxxx	xxxxx	xxxx	xxxx	xxxxx								
SharedQueue:	xxxxx	xxxx	xxxxx	xxxxx	xxxx	xxxxx	xxxxx	xxxx	xxxxx	0.0	xxxx	xxxxx								
Shrd StpDel:	xxxxx	xxxx	xxxxx	xxxxx	xxxx	xxxxx	xxxxx	xxxx	xxxxx	7.6	xxxx	xxxxx								
Shared LOS:	*	*	*	*	*	*	*	*	*	A	*	*								
ApproachDel:	10.9			8.9		xxxxxx			xxxxxx											
ApproachLOS:	B			A		*			*											

Wilson Creek Estates
Traffic Impact Analysis

Level Of Service Computation Report
2000 HCM Unsignalized Method (Future Volume Alternative)

Intersection #7 Oak Glen Rd & Cherry Croft Rd

Average Delay (sec/veh): 0.2 Worst Case Level Of Service: B[10.6]

Approach:	North Bound					South Bound					East Bound					West Bound				
Movement:	L	-	T	-	R	L	-	T	-	R	L	-	T	-	R	L	-	T	-	R
Control:	Stop Sign					Stop Sign					Uncontrolled					Uncontrolled				
Rights:	Include					Include					Include					Include				
Lanes:	0	0	0	0	0	0	0	1!	0	0	1	0	1	0	0	0	0	1	0	0
Volume Module:																				
Base Vol:	0	0	0	2	0	0	3	206	0	0	144	0								
Growth Adj:	1.00	1.00	1.00	1.00	1.00	1.00	1.00	1.00	1.00	1.00	1.00	1.00								
Initial Bse:	0	0	0	2	0	0	3	206	0	0	144	0								
Added Vol:	0	0	0	0	0	2	3	93	0	0	56	0								
PasserByVol:	0	0	0	0	0	0	0	0	0	0	0	0								
Initial Fut:	0	0	0	2	0	2	6	299	0	0	200	0								
User Adj:	1.00	1.00	1.00	1.00	1.00	1.00	1.00	1.00	1.00	1.00	1.00	1.00								
PHF Adj:	1.00	1.00	1.00	1.00	1.00	1.00	1.00	1.00	1.00	1.00	1.00	1.00								
PHF Volume:	0	0	0	2	0	2	6	299	0	0	200	0								
Reduct Vol:	0	0	0	0	0	0	0	0	0	0	0	0								
Final Vol.:	0	0	0	2	0	2	6	299	0	0	200	0								
Critical Gap Module:																				
Critical Gp:	xxxxx	xxxx	xxxxx	6.4	xxxx	6.2	4.1	xxxx	xxxxx	xxxxx	xxxx	xxxxx								
FollowUpTim:	xxxxx	xxxx	xxxxx	3.5	xxxx	3.3	2.2	xxxx	xxxxx	xxxxx	xxxx	xxxxx								
Capacity Module:																				
Cnflict Vol:	xxxx	xxxx	xxxxx	511	xxxx	200	200	xxxx	xxxxx	xxxx	xxxx	xxxxx								
Potent Cap.:	xxxx	xxxx	xxxxx	526	xxxx	846	1384	xxxx	xxxxx	xxxx	xxxx	xxxxx								
Move Cap.:	xxxx	xxxx	xxxxx	524	xxxx	846	1384	xxxx	xxxxx	xxxx	xxxx	xxxxx								
Volume/Cap:	xxxx	xxxx	xxxx	0.00	xxxx	0.00	0.00	xxxx	xxxx	xxxx	xxxx	xxxx								
Level Of Service Module:																				
Queue:	xxxxx	xxxx	xxxxx	xxxxx	xxxx	xxxxx	0.0	xxxx	xxxxx	xxxxx	xxxx	xxxxx								
Stopped Del:	xxxxx	xxxx	xxxxx	xxxxx	xxxx	xxxxx	7.6	xxxx	xxxxx	xxxxx	xxxx	xxxxx								
LOS by Move:	*	*	*	*	*	*	A	*	*	*	*	*								
Movement:	LT	-	LTR	-	RT	LT	-	LTR	-	RT	LT	-	LTR	-	RT	LT	-	LTR	-	RT
Shared Cap.:	xxxx	xxxx	xxxxx	xxxx	648	xxxxx	xxxx	xxxx	xxxxx	xxxx	xxxx	xxxxx								
SharedQueue:	xxxxx	xxxx	xxxxx	xxxxx	0.0	xxxxx	xxxxx	xxxx	xxxxx	xxxxx	xxxx	xxxxx								
Shrd StpDel:	xxxxx	xxxx	xxxxx	xxxxx	10.6	xxxxx	xxxxx	xxxx	xxxxx	xxxxx	xxxx	xxxxx								
Shared LOS:	*	*	*	*	B	*	*	*	*	*	*	*								
ApproachDel:	xxxxxx				10.6		xxxxxx				xxxxxx									
ApproachLOS:	*				B		*				*									

Wilson Creek Estates
Traffic Impact Analysis

Level Of Service Computation Report
2000 HCM Unsignalized Method (Future Volume Alternative)

Intersection #8 Pendleton Rd & Date Ave

Average Delay (sec/veh): 5.2 Worst Case Level Of Service: A[9.3]

Approach:	North Bound					South Bound					East Bound					West Bound				
Movement:	L	-	T	-	R	L	-	T	-	R	L	-	T	-	R	L	-	T	-	R
Control:	Uncontrolled					Uncontrolled					Stop Sign					Stop Sign				
Rights:	Include					Include					Include					Include				
Lanes:	0	1	0	0	0	0	0	0	1	0	0	0	1!	0	0	0	0	1	0	0
Volume Module:																				
Base Vol:	6	6	0	0	2	27	38	0	6	0	3	0								
Growth Adj:	1.00	1.00	1.00	1.00	1.00	1.00	1.00	1.00	1.00	1.00	1.00	1.00								
Initial Bse:	6	6	0	0	2	27	38	0	6	0	3	0								
Added Vol:	0	0	0	0	0	2	3	0	0	0	0	0								
PasserByVol:	0	0	0	0	0	0	0	0	0	0	0	0								
Initial Fut:	6	6	0	0	2	29	41	0	6	0	3	0								
User Adj:	1.00	1.00	1.00	1.00	1.00	1.00	1.00	1.00	1.00	1.00	1.00	1.00								
PHF Adj:	1.00	1.00	1.00	1.00	1.00	1.00	1.00	1.00	1.00	1.00	1.00	1.00								
PHF Volume:	6	6	0	0	2	29	41	0	6	0	3	0								
Reduct Vol:	0	0	0	0	0	0	0	0	0	0	0	0								
Final Vol.:	6	6	0	0	2	29	41	0	6	0	3	0								
Critical Gap Module:																				
Critical Gp:	4.1	xxxx	xxxxx	xxxxx	xxxx	xxxxx	7.1	xxxx	6.2	xxxxx	6.5	xxxxx								
FollowUpTim:	2.2	xxxx	xxxxx	xxxxx	xxxx	xxxxx	3.5	xxxx	3.3	xxxxx	4.0	xxxxx								
Capacity Module:																				
Cnflict Vol:	31	xxxx	xxxxx	xxxx	xxxx	xxxxx	36	xxxx	17	xxxx	49	xxxxx								
Potent Cap.:	1595	xxxx	xxxxx	xxxx	xxxx	xxxxx	975	xxxx	1068	xxxx	846	xxxxx								
Move Cap.:	1595	xxxx	xxxxx	xxxx	xxxx	xxxxx	969	xxxx	1068	xxxx	843	xxxxx								
Volume/Cap:	0.00	xxxx	xxxx	xxxx	xxxx	xxxx	0.04	xxxx	0.01	xxxx	0.00	xxxx								
Level Of Service Module:																				
Queue:	0.0	xxxx	xxxxx	xxxxx	xxxx	xxxxx	xxxxx	xxxx	xxxxx	xxxxx	0.0	xxxxx								
Stopped Del:	7.3	xxxx	xxxxx	xxxxx	xxxx	xxxxx	xxxxx	xxxx	xxxxx	xxxxx	9.3	xxxxx								
LOS by Move:	A	*	*	*	*	*	*	*	*	*	A	*								
Movement:	LT	-	LTR	-	RT	LT	-	LTR	-	RT	LT	-	LTR	-	RT	LT	-	LTR	-	RT
Shared Cap.:	xxxx	xxxx	xxxxx	xxxx	xxxx	xxxxx	xxxx	981	xxxxx	xxxx	xxxx	xxxxx								
SharedQueue:	0.0	xxxx	xxxxx	xxxxx	xxxx	xxxxx	xxxxx	0.2	xxxxx	xxxxx	xxxx	xxxxx								
Shrd StpDel:	7.3	xxxx	xxxxx	xxxxx	xxxx	xxxxx	xxxxx	8.9	xxxxx	xxxxx	xxxx	xxxxx								
Shared LOS:	A	*	*	*	*	*	*	A	*	*	*	*								
ApproachDel:	xxxxxx			xxxxxx				8.9			9.3									
ApproachLOS:	*			*				A			A									

Wilson Creek Estates
Traffic Impact Analysis

Level Of Service Computation Report
2000 HCM Unsignalized Method (Future Volume Alternative)

Intersection #9 Jefferson St & Fir Ave

Average Delay (sec/veh): 5.1 Worst Case Level Of Service: A[8.4]

Approach:	North Bound					South Bound					East Bound					West Bound				
Movement:	L	-	T	-	R	L	-	T	-	R	L	-	T	-	R	L	-	T	-	R
Control:	Uncontrolled					Uncontrolled					Stop Sign					Stop Sign				
Rights:	Include					Include					Include					Include				
Lanes:	0	1	0	0	0	0	0	1	0	0	0	0	0	0	1	0	0	0	0	0
Volume Module:																				
Base Vol:	0	0	0	0	0	0	0	0	0	0	0	0	0	0	0	0	0	0	0	0
Growth Adj:	1.00	1.00	1.00	1.00	1.00	1.00	1.00	1.00	1.00	1.00	1.00	1.00	1.00	1.00	1.00	1.00	1.00	1.00	1.00	1.00
Initial Bse:	0	0	0	0	0	0	0	0	0	0	0	0	0	0	0	0	0	0	0	0
Added Vol:	6	3	0	0	6	0	0	0	10	0	0	0	0	0	0	0	0	0	0	0
PasserByVol:	0	0	0	0	0	0	0	0	0	0	0	0	0	0	0	0	0	0	0	0
Initial Fut:	6	3	0	0	6	0	0	0	10	0	0	0	0	0	0	0	0	0	0	0
User Adj:	1.00	1.00	1.00	1.00	1.00	1.00	1.00	1.00	1.00	1.00	1.00	1.00	1.00	1.00	1.00	1.00	1.00	1.00	1.00	1.00
PHF Adj:	1.00	1.00	1.00	1.00	1.00	1.00	1.00	1.00	1.00	1.00	1.00	1.00	1.00	1.00	1.00	1.00	1.00	1.00	1.00	1.00
PHF Volume:	6	3	0	0	6	0	0	0	10	0	0	0	0	0	0	0	0	0	0	0
Reduct Vol:	0	0	0	0	0	0	0	0	0	0	0	0	0	0	0	0	0	0	0	0
Final Vol.:	6	3	0	0	6	0	0	0	10	0	0	0	0	0	0	0	0	0	0	0
Critical Gap Module:																				
Critical Gp:	4.1	xxxx	xxxxx	xxxxx	xxxx	xxxxx	xxxxx	xxxx		6.2	xxxxx	xxxx	xxxxx							
FollowUpTim:	2.2	xxxx	xxxxx	xxxxx	xxxx	xxxxx	xxxxx	xxxx		3.3	xxxxx	xxxx	xxxxx							
Capacity Module:																				
Cnflict Vol:	6	xxxx	xxxxx	xxxx	xxxx	xxxxx	xxxx	xxxx		6	xxxx	xxxx	xxxxx							
Potent Cap.:	1628	xxxx	xxxxx	xxxx	xxxx	xxxxx	xxxx	xxxx		1083	xxxx	xxxx	xxxxx							
Move Cap.:	1628	xxxx	xxxxx	xxxx	xxxx	xxxxx	xxxx	xxxx		1083	xxxx	xxxx	xxxxx							
Volume/Cap:	0.00	xxxx	xxxx	xxxx	xxxx	xxxx	xxxx	xxxx		0.01	xxxx	xxxx	xxxx							
Level Of Service Module:																				
Queue:	0.0	xxxx	xxxxx	xxxxx	xxxx	xxxxx	xxxxx	xxxx		0.0	xxxxx	xxxx	xxxxx							
Stopped Del:	7.2	xxxx	xxxxx	xxxxx	xxxx	xxxxx	xxxxx	xxxx		8.4	xxxxx	xxxx	xxxxx							
LOS by Move:	A	*	*	*	*	*	*	*		A	*	*	*							
Movement:	LT	-	LTR	-	RT	LT	-	LTR	-	RT	LT	-	LTR	-	RT	LT	-	LTR	-	RT
Shared Cap.:	xxxx	xxxx	xxxxx	xxxx	xxxx	xxxxx	xxxx	xxxx	xxxxx		xxxx	xxxx	xxxxx							
SharedQueue:	0.0	xxxx	xxxxx	xxxxx	xxxx	xxxxx	xxxxx	xxxx	xxxxx		xxxxx	xxxx	xxxxx							
Shrd StpDel:	7.2	xxxx	xxxxx	xxxxx	xxxx	xxxxx	xxxxx	xxxx	xxxxx		xxxxx	xxxx	xxxxx							
Shared LOS:	A	*	*	*	*	*	*	*	*		*	*	*							
ApproachDel:	xxxxxx			xxxxxx				8.4			xxxxxx									
ApproachLOS:	*			*				A			*									

Wilson Creek Estates
Traffic Impact Analysis

Level Of Service Computation Report
2000 HCM Unsignalized Method (Future Volume Alternative)

Intersection #10 Jefferson St & Cherry Croft (B St)

Average Delay (sec/veh): 2.8 Worst Case Level Of Service: A[9.7]

Approach:	North Bound					South Bound					East Bound					West Bound				
Movement:	L	-	T	-	R	L	-	T	-	R	L	-	T	-	R	L	-	T	-	R
Control:	Uncontrolled					Uncontrolled					Stop Sign					Stop Sign				
Rights:	Include					Include					Include					Include				
Lanes:	0	0	0	1	0	0	1	0	0	0	0	0	1	0	0	0	0	1!	0	0
Volume Module:																				
Base Vol:	0	0	0	0	0	0	0	0	0	0	0	0	0	0	0	0	0	0	0	0
Growth Adj:	1.00	1.00	1.00	1.00	1.00	1.00	1.00	1.00	1.00	1.00	1.00	1.00	1.00	1.00	1.00	1.00	1.00	1.00	1.00	1.00
Initial Bse:	0	0	0	0	0	0	0	0	0	0	0	0	0	0	0	0	0	0	0	0
Added Vol:	0	35	28	13	23	0	0	3	0	17	2	7								
PasserByVol:	0	0	0	0	0	0	0	0	0	0	0	0								
Initial Fut:	0	35	28	13	23	0	0	3	0	17	2	7								
User Adj:	1.00	1.00	1.00	1.00	1.00	1.00	1.00	1.00	1.00	1.00	1.00	1.00								
PHF Adj:	1.00	1.00	1.00	1.00	1.00	1.00	1.00	1.00	1.00	1.00	1.00	1.00								
PHF Volume:	0	35	28	13	23	0	0	3	0	17	2	7								
Reduct Vol:	0	0	0	0	0	0	0	0	0	0	0	0								
Final Vol.:	0	35	28	13	23	0	0	3	0	17	2	7								
Critical Gap Module:																				
Critical Gp:	xxxxx	xxxx	xxxxx	4.1	xxxx	xxxxx	xxxxx	6.5	xxxxx	7.1	6.5	6.2								
FollowUpTim:	xxxxx	xxxx	xxxxx	2.2	xxxx	xxxxx	xxxxx	4.0	xxxxx	3.5	4.0	3.3								
Capacity Module:																				
Cnflict Vol:	xxxx	xxxx	xxxxx	63	xxxx	xxxxx	xxxx	112	xxxxx	99	98	49								
Potent Cap.:	xxxx	xxxx	xxxxx	1553	xxxx	xxxxx	xxxx	782	xxxxx	887	796	1025								
Move Cap.:	xxxx	xxxx	xxxxx	1553	xxxx	xxxxx	xxxx	775	xxxxx	879	789	1025								
Volume/Cap:	xxxx	xxxx	xxxx	0.01	xxxx	xxxx	xxxx	0.00	xxxx	0.02	0.00	0.01								
Level Of Service Module:																				
Queue:	xxxxx	xxxx	xxxxx	0.0	xxxx	xxxxx	xxxxx	0.0	xxxxx	xxxxx	xxxx	xxxxx								
Stopped Del:	xxxxx	xxxx	xxxxx	7.3	xxxx	xxxxx	xxxxx	9.7	xxxxx	xxxxx	xxxx	xxxxx								
LOS by Move:	*	*	*	A	*	*	*	A	*	*	*	*								
Movement:	LT	-	LTR	-	RT	LT	-	LTR	-	RT	LT	-	LTR	-	RT	LT	-	LTR	-	RT
Shared Cap.:	xxxx	xxxx	xxxxx	xxxx	xxxx	xxxxx	xxxx	xxxx	xxxxx	xxxx	906	xxxxx								
SharedQueue:	xxxxx	xxxx	xxxxx	0.0	xxxx	xxxxx	xxxxx	xxxx	xxxxx	xxxxx	0.1	xxxxx								
Shrd StpDel:	xxxxx	xxxx	xxxxx	7.3	xxxx	xxxxx	xxxxx	xxxx	xxxxx	xxxxx	9.1	xxxxx								
Shared LOS:	*	*	*	A	*	*	*	*	*	*	A	*								
ApproachDel:	xxxxxx			xxxxxx			9.7			9.1										
ApproachLOS:	*			*			A			A										

Wilson Creek Estates
Traffic Impact Analysis

Level Of Service Computation Report
2000 HCM Unsignalized Method (Future Volume Alternative)

Intersection #11 Oak Glen Rd & O St

Average Delay (sec/veh): 1.2 Worst Case Level Of Service: A[8.8]

Approach:	North Bound			South Bound			East Bound			West Bound		
Movement:	L -	T -	R	L -	T -	R	L -	T -	R	L -	T -	R
Control:	Stop Sign			Stop Sign			Uncontrolled			Uncontrolled		
Rights:	Include			Include			Include			Include		
Lanes:	0 0	1! 0	0	0 0	0 0	1	0 1	0 0	0	0 0	1 0	0
Volume Module:												
Base Vol:	0	0	0	0	0	0	0	105	0	0	106	0
Growth Adj:	1.00	1.00	1.00	1.00	1.00	1.00	1.00	1.00	1.00	1.00	1.00	1.00
Initial Bse:	0	0	0	0	0	0	0	105	0	0	106	0
Added Vol:	0	0	0	0	0	13	23	0	0	0	0	0
PasserByVol:	0	0	0	0	0	0	0	0	0	0	0	0
Initial Fut:	0	0	0	0	0	13	23	105	0	0	106	0
User Adj:	1.00	1.00	1.00	1.00	1.00	1.00	1.00	1.00	1.00	1.00	1.00	1.00
PHF Adj:	1.00	1.00	1.00	1.00	1.00	1.00	1.00	1.00	1.00	1.00	1.00	1.00
PHF Volume:	0	0	0	0	0	13	23	105	0	0	106	0
Reduct Vol:	0	0	0	0	0	0	0	0	0	0	0	0
Final Vol.:	0	0	0	0	0	13	23	105	0	0	106	0
Critical Gap Module:												
Critical Gp:	xxxxx	xxxx	xxxxx	xxxxx	xxxx	6.2	4.1	xxxx	xxxxx	xxxxx	xxxx	xxxxx
FollowUpTim:	xxxxx	xxxx	xxxxx	xxxxx	xxxx	3.3	2.2	xxxx	xxxxx	xxxxx	xxxx	xxxxx
Capacity Module:												
Cnflict Vol:	xxxx	xxxx	xxxxx	xxxx	xxxx	106	106	xxxx	xxxxx	xxxx	xxxx	xxxxx
Potent Cap.:	xxxx	xxxx	xxxxx	xxxx	xxxx	954	1498	xxxx	xxxxx	xxxx	xxxx	xxxxx
Move Cap.:	xxxx	xxxx	xxxxx	xxxx	xxxx	954	1498	xxxx	xxxxx	xxxx	xxxx	xxxxx
Volume/Cap:	xxxx	xxxx	xxxx	xxxx	xxxx	0.01	0.02	xxxx	xxxx	xxxx	xxxx	xxxx
Level Of Service Module:												
Queue:	xxxxx	xxxx	xxxxx	xxxxx	xxxx	0.0	0.0	xxxx	xxxxx	xxxxx	xxxx	xxxxx
Stopped Del:	xxxxx	xxxx	xxxxx	xxxxx	xxxx	8.8	7.4	xxxx	xxxxx	xxxxx	xxxx	xxxxx
LOS by Move:	*	*	*	*	*	A	A	*	*	*	*	*
Movement:	LT -	LTR -	RT	LT -	LTR -	RT	LT -	LTR -	RT	LT -	LTR -	RT
Shared Cap.:	xxxx	0	xxxxx	xxxx	xxxx	xxxxx	xxxx	xxxx	xxxxx	xxxx	xxxx	xxxxx
SharedQueue:	xxxxx	xxxx	xxxxx	xxxxx	xxxx	xxxxx	0.0	xxxx	xxxxx	xxxxx	xxxx	xxxxx
Shrd StpDel:	xxxxx	xxxx	xxxxx	xxxxx	xxxx	xxxxx	7.4	xxxx	xxxxx	xxxxx	xxxx	xxxxx
Shared LOS:	*	*	*	*	*	*	A	*	*	*	*	*
ApproachDel:	xxxxxx			8.8			xxxxxx			xxxxxx		
ApproachLOS:	*			A			*			*		

APPENDIX F

INTERSECTION ANALYSIS WORKSHEETS

WITH SEASONAL ADJUSTMENT

Wilson Creek Estates
Traffic Impact Analysis

Scenario Report

Scenario:	2015 AM Existing
Command:	Default Command
Volume:	Ex AM
Geometry:	Ex Geo
Impact Fee:	Default Impact Fee
Trip Generation:	AM
Trip Distribution:	Default Trip Distribution
Paths:	Default Paths
Routes:	Default Routes
Configuration:	Ex

Wilson Creek Estates
Traffic Impact Analysis

Level Of Service Computation Report
2000 HCM Operations Method (Base Volume Alternative)

Intersection #1 Oak Glen Rd & Bryant St

Cycle (sec): 60 Critical Vol./Cap. (X): 0.907
Loss Time (sec): 4 (Y+R = 4 sec) Average Delay (sec/veh): 29.9
Optimal Cycle: 76 Level Of Service: C

Approach:	North Bound			South Bound			East Bound			West Bound		
Movement:	L - T - R			L - T - R			L - T - R			L - T - R		
Control:	Protected			Protected			Protected			Protected		
Rights:	Include			Include			Include			Include		
Min. Green:	0	0	0	0	0	0	0	0	0	0	0	0
Lanes:	1 0 2 0 1			1 0 2 0 1			1 0 1 0 1			1 0 1 0 1		
Volume Module:												
Base Vol:	313	358	53	31	353	439	200	95	264	45	213	50
Growth Adj:	1.00	1.00	1.00	1.00	1.00	1.00	1.00	1.10	1.00	1.00	1.10	1.00
Initial Bse:	313	358	53	31	353	439	200	105	264	45	234	50
User Adj:	1.00	1.00	1.00	1.00	1.00	1.00	1.00	1.00	1.00	1.00	1.00	1.00
PHF Adj:	0.80	0.80	0.80	0.80	0.80	0.80	0.80	0.80	0.80	0.80	0.80	0.80
PHF Volume:	391	447	66	39	441	549	250	131	330	56	293	63
Reduct Vol:	0	0	0	0	0	0	0	0	0	0	0	0
Reduced Vol:	391	447	66	39	441	549	250	131	330	56	293	63
PCE Adj:	1.00	1.00	1.00	1.00	1.00	1.00	1.00	1.00	1.00	1.00	1.00	1.00
MLF Adj:	1.00	1.00	1.00	1.00	1.00	1.00	1.00	1.00	1.00	1.00	1.00	1.00
Final Vol.:	391	447	66	39	441	549	250	131	330	56	293	63
Saturation Flow Module:												
Sat/Lane:	1800	1800	1800	1800	1800	1800	1800	1800	1800	1800	1800	1800
Adjustment:	0.94	1.00	1.00	0.94	1.00	1.00	0.94	1.00	1.00	0.94	1.00	1.00
Lanes:	1.00	2.00	1.00	1.00	2.00	1.00	1.00	1.00	1.00	1.00	1.00	1.00
Final Sat.:	1692	3600	1800	1692	3600	1800	1692	1800	1800	1692	1800	1800
Capacity Analysis Module:												
Vol/Sat:	0.23	0.12	0.04	0.02	0.12	0.30	0.15	0.07	0.18	0.03	0.16	0.03
Crit Moves:	****					****	****				****	
Green/Cycle:	0.25	0.50	0.50	0.09	0.34	0.34	0.16	0.29	0.29	0.05	0.18	0.18
Volume/Cap:	0.91	0.25	0.07	0.25	0.36	0.91	0.91	0.25	0.63	0.63	0.91	0.19
Delay/Veh:	44.2	8.7	7.8	26.2	15.3	36.5	55.8	16.6	21.1	41.8	51.9	21.2
User DelAdj:	1.00	1.00	1.00	1.00	1.00	1.00	1.00	1.00	1.00	1.00	1.00	1.00
AdjDel/Veh:	44.2	8.7	7.8	26.2	15.3	36.5	55.8	16.6	21.1	41.8	51.9	21.2
HCM2kAvg:	11	2	1	1	3	14	8	2	6	2	9	1

Wilson Creek Estates
Traffic Impact Analysis

Level Of Service Computation Report
2000 HCM Unsignalized Method (Base Volume Alternative)

Intersection #5 Oak Glen Rd & Pendleton Rd

Average Delay (sec/veh): 1.4 Worst Case Level Of Service: A[9.6]

Approach:	North Bound						South Bound						East Bound						West Bound					
Movement:	L	-	T	-	R		L	-	T	-	R		L	-	T	-	R		L	-	T	-	R	
Control:	Stop Sign						Stop Sign						Uncontrolled						Uncontrolled					
Rights:	Include						Include						Include						Include					
Lanes:	0	0	1!	0	0		0	0	1!	0	0		0	0	0	1	0		0	0	1	0	0	
Volume Module:																								
Base Vol:	26		0		4		0		0		0		0		51		10		0		117		0	
Growth Adj:	1.00	1.00	1.00	1.00	1.00	1.00	1.00	1.00	1.00	1.00	1.00	1.00	1.00	1.00	1.00	1.00	1.00	1.00	1.00	1.00	1.00	1.00	1.00	1.00
Initial Bse:	26		0		4		0		0		0		0		51		10		0		117		0	
User Adj:	1.00	1.00	1.00	1.00	1.00	1.00	1.00	1.00	1.00	1.00	1.00	1.00	1.00	1.00	1.00	1.00	1.00	1.00	1.00	1.00	1.00	1.00	1.00	1.00
PHF Adj:	0.84	0.84	0.84	0.84	0.84	0.84	0.84	0.84	0.84	0.84	0.84	0.84	0.84	0.84	0.84	0.84	0.84	0.84	0.84	0.84	0.84	0.84	0.84	0.84
PHF Volume:	31		0		5		0		0		0		0		61		12		0		139		0	
Reduct Vol:	0		0		0		0		0		0		0		0		0		0		0		0	
Final Vol.:	31		0		5		0		0		0		0		61		12		0		139		0	
Critical Gap Module:																								
Critical Gp:	6.4	xxxx			6.2	xxxxx	xxxx	xxxxx	xxxxx	xxxx	xxxxx	xxxxx	xxxx	xxxxx										
FollowUpTim:	3.5	xxxx			3.3	xxxxx	xxxx	xxxxx	xxxxx	xxxx	xxxxx	xxxxx	xxxx	xxxxx										
Capacity Module:																								
Cnflict Vol:	206	xxxx			67	xxxx	xxxx	xxxxx	xxxx	xxxx	xxxxx	xxxx	xxxx	xxxxx										
Potent Cap.:	787	xxxx			1003	xxxx	xxxx	xxxxx	xxxx	xxxx	xxxxx	xxxx	xxxx	xxxxx										
Move Cap.:	787	xxxx			1003	xxxx	xxxx	xxxxx	xxxx	xxxx	xxxxx	xxxx	xxxx	xxxxx										
Volume/Cap:	0.04	xxxx			0.00	xxxx	xxxx	xxxx	xxxx	xxxx	xxxx	xxxx	xxxx	xxxx										
Level Of Service Module:																								
Queue:	xxxxx	xxxx	xxxxx	xxxxx	xxxx	xxxxx	xxxxx	xxxx	xxxxx	xxxxx	xxxx	xxxxx												
Stopped Del:	xxxxx	xxxx	xxxxx	xxxxx	xxxx	xxxxx	xxxxx	xxxx	xxxxx	xxxxx	xxxx	xxxxx												
LOS by Move:	*	*	*	*	*	*	*	*	*	*	*	*												
Movement:	LT	-	LTR	-	RT		LT	-	LTR	-	RT		LT	-	LTR	-	RT		LT	-	LTR	-	RT	
Shared Cap.:	xxxx		810	xxxxx	xxxx		0	xxxxx	xxxx	xxxx	xxxxx	xxxx	xxxx	xxxxx										
SharedQueue:	xxxxx		0.1	xxxxx	xxxxx	xxxx	xxxxx	xxxxx	xxxx	xxxxx	xxxxx	xxxx	xxxx	xxxxx										
Shrd StpDel:	xxxxx		9.6	xxxxx	xxxxx	xxxx	xxxxx	xxxxx	xxxx	xxxxx	xxxxx	xxxx	xxxx	xxxxx										
Shared LOS:	*		A	*	*	*	*	*	*	*	*	*	*	*										
ApproachDel:			9.6				xxxxxx				xxxxxx				xxxxxx									
ApproachLOS:			A				*				*				*									

Wilson Creek Estates
Traffic Impact Analysis

Level Of Service Computation Report
2000 HCM Unsignalized Method (Base Volume Alternative)

Intersection #6 Oak Glen Rd & Casa Blance Rd

Average Delay (sec/veh): 2.1 Worst Case Level Of Service: A[9.5]

Approach:	North Bound					South Bound					East Bound					West Bound				
Movement:	L	-	T	-	R	L	-	T	-	R	L	-	T	-	R	L	-	T	-	R
Control:	Stop Sign					Stop Sign					Uncontrolled					Uncontrolled				
Rights:	Include					Include					Include					Include				
Lanes:	1	0	0	0	0	0	0	1!	0	0	0	0	0	1	0	0	0	1	0	0
Volume Module:																				
Base Vol:	37		0		0	0		0		0	0		44		10	0		79		0
Growth Adj:	1.00	1.00		1.00		1.00	1.00		1.00		1.00	1.00		1.00		1.00	1.00		1.00	
Initial Bse:	37		0		0	0		0		0	0		44		10	0		79		0
User Adj:	1.00	1.00		1.00		1.00	1.00		1.00		1.00	1.00		1.00		1.00	1.00		1.00	
PHF Adj:	0.87	0.87		0.87		0.87	0.87		0.87		0.87	0.87		0.87		0.87	0.87		0.87	
PHF Volume:	43		0		0	0		0		0	0		51		11	0		91		0
Reduct Vol:	0		0		0	0		0		0	0		0		0	0		0		0
Final Vol.:	43		0		0	0		0		0	0		51		11	0		91		0
Critical Gap Module:																				
Critical Gp:	6.4	xxxx	xxxxx	xxxxx	xxxx	xxxxx	xxxxx	xxxx	xxxxx	xxxxx	xxxx	xxxxx								
FollowUpTim:	3.5	xxxx	xxxxx	xxxxx	xxxx	xxxxx	xxxxx	xxxx	xxxxx	xxxxx	xxxx	xxxxx								
Capacity Module:																				
Cnflict Vol:	147	xxxx	xxxxx	xxxx	xxxx	xxxxx	xxxx	xxxx	xxxxx	xxxx	xxxx	xxxxx								
Potent Cap.:	850	xxxx	xxxxx	xxxx	xxxx	xxxxx	xxxx	xxxx	xxxxx	xxxx	xxxx	xxxxx								
Move Cap.:	850	xxxx	xxxxx	xxxx	xxxx	xxxxx	xxxx	xxxx	xxxxx	xxxx	xxxx	xxxxx								
Volume/Cap:	0.05	xxxx	xxxx	xxxx	xxxx	xxxx	xxxx	xxxx	xxxx	xxxx	xxxx	xxxx								
Level Of Service Module:																				
Queue:	0.2	xxxx	xxxxx	xxxxx	xxxx	xxxxx	xxxxx	xxxx	xxxxx	xxxxx	xxxx	xxxxx								
Stopped Del:	9.5	xxxx	xxxxx	xxxxx	xxxx	xxxxx	xxxxx	xxxx	xxxxx	xxxxx	xxxx	xxxxx								
LOS by Move:	A	*	*	*	*	*	*	*	*	*	*	*								
Movement:	LT	-	LTR	-	RT	LT	-	LTR	-	RT	LT	-	LTR	-	RT	LT	-	LTR	-	RT
Shared Cap.:	xxxx	xxxx	xxxxx	xxxx		0	xxxxx	xxxx	xxxx	xxxxx	xxxx	xxxx	xxxxx							
SharedQueue:	xxxxx	xxxx	xxxxx	xxxxx	xxxx	xxxxx	xxxxx	xxxx	xxxxx	xxxxx	xxxx	xxxxx								
Shrd StpDel:	xxxxx	xxxx	xxxxx	xxxxx	xxxx	xxxxx	xxxxx	xxxx	xxxxx	xxxxx	xxxx	xxxxx								
Shared LOS:	*	*	*	*	*	*	*	*	*	*	*	*								
ApproachDel:	9.5			xxxxxx			xxxxxx			xxxxxx										
ApproachLOS:	A			*			*			*										

Wilson Creek Estates
Traffic Impact Analysis

Level Of Service Computation Report
2000 HCM Unsignalized Method (Base Volume Alternative)

Intersection #7 Oak Glen Rd & Cherry Croft Rd

Average Delay (sec/veh): 0.0 Worst Case Level Of Service: A[9.3]

Approach:	North Bound					South Bound					East Bound					West Bound				
Movement:	L	-	T	-	R	L	-	T	-	R	L	-	T	-	R	L	-	T	-	R
Control:	Stop Sign					Stop Sign					Uncontrolled					Uncontrolled				
Rights:	Include					Include					Include					Include				
Lanes:	0	0	0	0	0	0	0	0	0	1	1	0	1	0	0	0	0	1	0	0
Volume Module:																				
Base Vol:	0	0	0	0	0	0	1	0	0	0	0	60	0	0	144	0				
Growth Adj:	1.00	1.00	1.00	1.00	1.00	1.00	1.00	1.00	1.10	1.00	1.00	1.10	1.00							
Initial Bse:	0	0	0	0	0	1	0	66	0	0	158	0								
User Adj:	1.00	1.00	1.00	1.00	1.00	1.00	1.00	1.00	1.00	1.00	1.00	1.00								
PHF Adj:	0.80	0.80	0.80	0.80	0.80	0.80	0.80	0.80	0.80	0.80	0.80	0.80								
PHF Volume:	0	0	0	0	0	1	0	83	0	0	198	0								
Reduct Vol:	0	0	0	0	0	0	0	0	0	0	0	0								
Final Vol.:	0	0	0	0	0	1	0	83	0	0	198	0								
Critical Gap Module:																				
Critical Gp:	xxxxx	xxxx	xxxxx	xxxxx	xxxx	6.2	xxxxx	xxxx	xxxxx	xxxxx	xxxx	xxxxx								
FollowUpTim:	xxxxx	xxxx	xxxxx	xxxxx	xxxx	3.3	xxxxx	xxxx	xxxxx	xxxxx	xxxx	xxxxx								
Capacity Module:																				
Cnflict Vol:	xxxx	xxxx	xxxxx	xxxx	xxxx	198	xxxx	xxxx	xxxxx	xxxx	xxxx	xxxxx								
Potent Cap.:	xxxx	xxxx	xxxxx	xxxx	xxxx	848	xxxx	xxxx	xxxxx	xxxx	xxxx	xxxxx								
Move Cap.:	xxxx	xxxx	xxxxx	xxxx	xxxx	848	xxxx	xxxx	xxxxx	xxxx	xxxx	xxxxx								
Volume/Cap:	xxxx	xxxx	xxxx	xxxx	xxxx	0.00	xxxx	xxxx	xxxx	xxxx	xxxx	xxxx								
Level Of Service Module:																				
Queue:	xxxxx	xxxx	xxxxx	xxxxx	xxxx	0.0	xxxxx	xxxx	xxxxx	xxxxx	xxxx	xxxxx								
Stopped Del:	xxxxx	xxxx	xxxxx	xxxxx	xxxx	9.3	xxxxx	xxxx	xxxxx	xxxxx	xxxx	xxxxx								
LOS by Move:	*	*	*	*	*	A	*	*	*	*	*	*								
Movement:	LT	-	LTR	-	RT	LT	-	LTR	-	RT	LT	-	LTR	-	RT	LT	-	LTR	-	RT
Shared Cap.:	xxxx	xxxx	xxxxx	xxxx	xxxx	xxxxx	xxxx	xxxx	xxxxx	xxxx	xxxx	xxxxx								
SharedQueue:	xxxxx	xxxx	xxxxx	xxxxx	xxxx	xxxxx	xxxxx	xxxx	xxxxx	xxxxx	xxxx	xxxxx								
Shrd StpDel:	xxxxx	xxxx	xxxxx	xxxxx	xxxx	xxxxx	xxxxx	xxxx	xxxxx	xxxxx	xxxx	xxxxx								
Shared LOS:	*	*	*	*	*	*	*	*	*	*	*	*								
ApproachDel:	xxxxxx					9.3	xxxxxx					xxxxxx								
ApproachLOS:	*					A	*					*								

Wilson Creek Estates
Traffic Impact Analysis

Scenario Report

Scenario:	2015 PM Existing
Command:	Default Command
Volume:	Ex PM
Geometry:	Ex Geo
Impact Fee:	Default Impact Fee
Trip Generation:	PM
Trip Distribution:	Default Trip Distribution
Paths:	Default Paths
Routes:	Default Routes
Configuration:	Ex

Wilson Creek Estates
Traffic Impact Analysis

Level Of Service Computation Report
2000 HCM Operations Method (Base Volume Alternative)

Intersection #1 Oak Glen Rd & Bryant St

Cycle (sec): 60 Critical Vol./Cap. (X): 0.467
Loss Time (sec): 4 (Y+R = 4 sec) Average Delay (sec/veh): 17.9
Optimal Cycle: 21 Level Of Service: B

Approach:	North Bound			South Bound			East Bound			West Bound		
Movement:	L - T - R			L - T - R			L - T - R			L - T - R		
Control:	Protected			Protected			Protected			Protected		
Rights:	Include			Include			Include			Include		
Min. Green:	0	0	0	0	0	0	0	0	0	0	0	0
Lanes:	1 0 2 0 1			1 0 2 0 1			1 0 1 0 1			1 0 1 0 1		
Volume Module:												
Base Vol:	172	203	48	41	261	196	270	169	221	48	107	65
Growth Adj:	1.00	1.00	1.00	1.00	1.00	1.00	1.00	1.10	1.00	1.00	1.10	1.00
Initial Bse:	172	203	48	41	261	196	270	186	221	48	118	65
User Adj:	1.00	1.00	1.00	1.00	1.00	1.00	1.00	1.00	1.00	1.00	1.00	1.00
PHF Adj:	1.00	1.00	1.00	1.00	1.00	1.00	1.00	1.00	1.00	1.00	1.00	1.00
PHF Volume:	172	203	48	41	261	196	270	186	221	48	118	65
Reduct Vol:	0	0	0	0	0	0	0	0	0	0	0	0
Reduced Vol:	172	203	48	41	261	196	270	186	221	48	118	65
PCE Adj:	1.00	1.00	1.00	1.00	1.00	1.00	1.00	1.00	1.00	1.00	1.00	1.00
MLF Adj:	1.00	1.00	1.00	1.00	1.00	1.00	1.00	1.00	1.00	1.00	1.00	1.00
Final Vol.:	172	203	48	41	261	196	270	186	221	48	118	65
Saturation Flow Module:												
Sat/Lane:	1800	1800	1800	1800	1800	1800	1800	1800	1800	1800	1800	1800
Adjustment:	0.94	1.00	1.00	0.94	1.00	1.00	0.94	1.00	1.00	0.94	1.00	1.00
Lanes:	1.00	2.00	1.00	1.00	2.00	1.00	1.00	1.00	1.00	1.00	1.00	1.00
Final Sat.:	1692	3600	1800	1692	3600	1800	1692	1800	1800	1692	1800	1800
Capacity Analysis Module:												
Vol/Sat:	0.10	0.06	0.03	0.02	0.07	0.11	0.16	0.10	0.12	0.03	0.07	0.04
Crit Moves:	****					****	****				****	
Green/Cycle:	0.22	0.32	0.32	0.14	0.23	0.23	0.34	0.39	0.39	0.09	0.14	0.14
Volume/Cap:	0.47	0.18	0.08	0.18	0.31	0.47	0.47	0.26	0.31	0.31	0.47	0.26
Delay/Veh:	21.4	15.0	14.5	23.3	19.2	20.6	16.1	12.6	12.9	26.7	25.1	23.6
User DelAdj:	1.00	1.00	1.00	1.00	1.00	1.00	1.00	1.00	1.00	1.00	1.00	1.00
AdjDel/Veh:	21.4	15.0	14.5	23.3	19.2	20.6	16.1	12.6	12.9	26.7	25.1	23.6
HCM2kAvg:	3	1	1	1	2	4	4	2	3	1	3	1

Wilson Creek Estates
Traffic Impact Analysis

Level Of Service Computation Report
2000 HCM Unsignalized Method (Base Volume Alternative)

Intersection #5 Oak Glen Rd & Pendleton Rd

Average Delay (sec/veh): 0.5 Worst Case Level Of Service: A[9.6]

Approach:	North Bound			South Bound			East Bound			West Bound		
Movement:	L	T	R	L	T	R	L	T	R	L	T	R
Control:	Stop Sign			Stop Sign			Uncontrolled			Uncontrolled		
Rights:	Include			Include			Include			Include		
Lanes:	0 0 1! 0 0			0 0 1! 0 0			0 0 0 1 0			0 1 0 0 0		
Volume Module:												
Base Vol:	9	0	3	0	0	0	0	106	23	1	87	0
Growth Adj:	1.00	1.00	1.00	1.00	1.00	1.00	1.00	1.10	1.00	1.00	1.10	1.00
Initial Bse:	9	0	3	0	0	0	0	117	23	1	96	0
User Adj:	1.00	1.00	1.00	1.00	1.00	1.00	1.00	1.00	1.00	1.00	1.00	1.00
PHF Adj:	1.00	1.00	1.00	1.00	1.00	1.00	1.00	1.00	1.00	1.00	1.00	1.00
PHF Volume:	9	0	3	0	0	0	0	117	23	1	96	0
Reduct Vol:	0	0	0	0	0	0	0	0	0	0	0	0
Final Vol.:	9	0	3	0	0	0	0	117	23	1	96	0
Critical Gap Module:												
Critical Gp:	6.4	xxxx	6.2	xxxxx	xxxx	xxxxx	xxxxx	xxxx	xxxxx	4.1	xxxx	xxxxx
FollowUpTim:	3.5	xxxx	3.3	xxxxx	xxxx	xxxxx	xxxxx	xxxx	xxxxx	2.2	xxxx	xxxxx
Capacity Module:												
Cnflict Vol:	226	xxxx	128	xxxx	xxxx	xxxxx	xxxx	xxxx	xxxxx	140	xxxx	xxxxx
Potent Cap.:	767	xxxx	927	xxxx	xxxx	xxxxx	xxxx	xxxx	xxxxx	1456	xxxx	xxxxx
Move Cap.:	766	xxxx	927	xxxx	xxxx	xxxxx	xxxx	xxxx	xxxxx	1456	xxxx	xxxxx
Volume/Cap:	0.01	xxxx	0.00	xxxx	xxxx	xxxx	xxxx	xxxx	xxxx	0.00	xxxx	xxxx
Level Of Service Module:												
Queue:	xxxxx	xxxx	xxxxx	xxxxx	xxxx	xxxxx	xxxxx	xxxx	xxxxx	0.0	xxxx	xxxxx
Stopped Del:	xxxxx	xxxx	xxxxx	xxxxx	xxxx	xxxxx	xxxxx	xxxx	xxxxx	7.5	xxxx	xxxxx
LOS by Move:	*	*	*	*	*	*	*	*	*	A	*	*
Movement:	LT	LTR	RT	LT	LTR	RT	LT	LTR	RT	LT	LTR	RT
Shared Cap.:	xxxx	801	xxxxx	xxxx	0	xxxxx	xxxx	xxxx	xxxxx	xxxx	xxxx	xxxxx
SharedQueue:	xxxxx	0.0	xxxxx	xxxxx	xxxx	xxxxx	xxxxx	xxxx	xxxxx	0.0	xxxx	xxxxx
Shrd StpDel:	xxxxx	9.6	xxxxx	xxxxx	xxxx	xxxxx	xxxxx	xxxx	xxxxx	7.5	xxxx	xxxxx
Shared LOS:	*	A	*	*	*	*	*	*	*	A	*	*
ApproachDel:		9.6		xxxxxx			xxxxxx			xxxxxx		
ApproachLOS:		A			*			*			*	

Wilson Creek Estates
Traffic Impact Analysis

Level Of Service Computation Report
2000 HCM Unsignalized Method (Base Volume Alternative)

Intersection #6 Oak Glen Rd & Casa Blance Rd

Average Delay (sec/veh): 0.9 Worst Case Level Of Service: A[9.5]

Approach:	North Bound					South Bound					East Bound					West Bound				
Movement:	L	-	T	-	R	L	-	T	-	R	L	-	T	-	R	L	-	T	-	R
Control:	Stop Sign					Stop Sign					Uncontrolled					Uncontrolled				
Rights:	Include					Include					Include					Include				
Lanes:	1	0	0	0	0	0	0	1!	0	0	0	0	0	1	0	0	1	0	0	0
Volume Module:																				
Base Vol:	20	0	0	0	0	0	0	0	0	0	0	70	42	1	69	0				
Growth Adj:	1.00	1.00	1.00	1.00	1.00	1.00	1.00	1.00	1.00	1.00	1.00	1.10	1.00	1.00	1.10	1.00				
Initial Bse:	20	0	0	0	0	0	0	0	0	0	0	77	42	1	76	0				
User Adj:	1.00	1.00	1.00	1.00	1.00	1.00	1.00	1.00	1.00	1.00	1.00	1.00	1.00	1.00	1.00	1.00				
PHF Adj:	1.00	1.00	1.00	1.00	1.00	1.00	1.00	1.00	1.00	1.00	1.00	1.00	1.00	1.00	1.00	1.00				
PHF Volume:	20	0	0	0	0	0	0	0	0	0	0	77	42	1	76	0				
Reduct Vol:	0	0	0	0	0	0	0	0	0	0	0	0	0	0	0	0				
Final Vol.:	20	0	0	0	0	0	0	0	0	0	0	77	42	1	76	0				
Critical Gap Module:																				
Critical Gp:	6.4	xxxx	xxxxx	xxxxx	xxxx	xxxxx	xxxxx	xxxx	xxxxx		4.1	xxxx	xxxxx							
FollowUpTim:	3.5	xxxx	xxxxx	xxxxx	xxxx	xxxxx	xxxxx	xxxx	xxxxx		2.2	xxxx	xxxxx							
Capacity Module:																				
Cnflict Vol:	176	xxxx	xxxxx	xxxx	xxxx	xxxxx	xxxx	xxxx	xxxxx		119	xxxx	xxxxx							
Potent Cap.:	819	xxxx	xxxxx	xxxx	xxxx	xxxxx	xxxx	xxxx	xxxxx		1482	xxxx	xxxxx							
Move Cap.:	818	xxxx	xxxxx	xxxx	xxxx	xxxxx	xxxx	xxxx	xxxxx		1482	xxxx	xxxxx							
Volume/Cap:	0.02	xxxx	xxxx	xxxx	xxxx	xxxx	xxxx	xxxx	xxxx		0.00	xxxx	xxxx							
Level Of Service Module:																				
Queue:	0.1	xxxx	xxxxx	xxxxx	xxxx	xxxxx	xxxxx	xxxx	xxxxx		0.0	xxxx	xxxxx							
Stopped Del:	9.5	xxxx	xxxxx	xxxxx	xxxx	xxxxx	xxxxx	xxxx	xxxxx		7.4	xxxx	xxxxx							
LOS by Move:	A	*	*	*	*	*	*	*	*		A	*	*							
Movement:	LT	-	LTR	-	RT	LT	-	LTR	-	RT	LT	-	LTR	-	RT	LT	-	LTR	-	RT
Shared Cap.:	xxxx	xxxx	xxxxx	xxxx	0	xxxxx	xxxx	xxxx	xxxxx		xxxx	xxxx	xxxxx							
SharedQueue:	xxxxx	xxxx	xxxxx	xxxxx	xxxx	xxxxx	xxxxx	xxxx	xxxxx		0.0	xxxx	xxxxx							
Shrd StpDel:	xxxxx	xxxx	xxxxx	xxxxx	xxxx	xxxxx	xxxxx	xxxx	xxxxx		7.4	xxxx	xxxxx							
Shared LOS:	*	*	*	*	*	*	*	*	*		A	*	*							
ApproachDel:	9.5			xxxxxx			xxxxxx				xxxxxx									
ApproachLOS:	A			*			*				*									

Wilson Creek Estates
Traffic Impact Analysis

Level Of Service Computation Report
2000 HCM Unsignalized Method (Base Volume Alternative)

Intersection #7 Oak Glen Rd & Cherry Croft Rd

Average Delay (sec/veh): 0.1 Worst Case Level Of Service: A[9.9]

Approach:	North Bound					South Bound					East Bound					West Bound				
Movement:	L	-	T	-	R	L	-	T	-	R	L	-	T	-	R	L	-	T	-	R
Control:	Stop Sign					Stop Sign					Uncontrolled					Uncontrolled				
Rights:	Include					Include					Include					Include				
Lanes:	0	0	0	0	0	1	0	0	0	0	1	0	1	0	0	0	0	1	0	0
Volume Module:																				
Base Vol:	0	0	0			1	0	0			2	137	0			0	96	0		
Growth Adj:	1.00	1.00	1.00			1.00	1.00	1.00			1.00	1.10	1.00			1.00	1.10	1.00		
Initial Bse:	0	0	0			1	0	0			2	151	0			0	106	0		
User Adj:	1.00	1.00	1.00			1.00	1.00	1.00			1.00	1.00	1.00			1.00	1.00	1.00		
PHF Adj:	1.00	1.00	1.00			1.00	1.00	1.00			1.00	1.00	1.00			1.00	1.00	1.00		
PHF Volume:	0	0	0			1	0	0			2	151	0			0	106	0		
Reduct Vol:	0	0	0			0	0	0			0	0	0			0	0	0		
Final Vol.:	0	0	0			1	0	0			2	151	0			0	106	0		
Critical Gap Module:																				
Critical Gp:	xxxxx	xxxx	xxxxx			6.4	xxxx	xxxxx			4.1	xxxx	xxxxx			xxxxx	xxxx	xxxxx		
FollowUpTim:	xxxxx	xxxx	xxxxx			3.5	xxxx	xxxxx			2.2	xxxx	xxxxx			xxxxx	xxxx	xxxxx		
Capacity Module:																				
Cnflict Vol:	xxxx	xxxx	xxxxx			260	xxxx	xxxxx			106	xxxx	xxxxx			xxxx	xxxx	xxxxx		
Potent Cap.:	xxxx	xxxx	xxxxx			733	xxxx	xxxxx			1498	xxxx	xxxxx			xxxx	xxxx	xxxxx		
Move Cap.:	xxxx	xxxx	xxxxx			732	xxxx	xxxxx			1498	xxxx	xxxxx			xxxx	xxxx	xxxxx		
Volume/Cap:	xxxx	xxxx	xxxx			0.00	xxxx	xxxx			0.00	xxxx	xxxx			xxxx	xxxx	xxxx		
Level Of Service Module:																				
Queue:	xxxxx	xxxx	xxxxx			0.0	xxxx	xxxxx			0.0	xxxx	xxxxx			xxxxx	xxxx	xxxxx		
Stopped Del:	xxxxx	xxxx	xxxxx			9.9	xxxx	xxxxx			7.4	xxxx	xxxxx			xxxxx	xxxx	xxxxx		
LOS by Move:	*	*	*			A	*	*			A	*	*			*	*	*		
Movement:	LT	-	LTR	-	RT	LT	-	LTR	-	RT	LT	-	LTR	-	RT	LT	-	LTR	-	RT
Shared Cap.:	xxxx	xxxx	xxxxx			xxxx	xxxx	xxxxx			xxxx	xxxx	xxxxx			xxxx	xxxx	xxxxx		
SharedQueue:	xxxxx	xxxx	xxxxx			xxxxx	xxxx	xxxxx			xxxxx	xxxx	xxxxx			xxxxx	xxxx	xxxxx		
Shrd StpDel:	xxxxx	xxxx	xxxxx			xxxxx	xxxx	xxxxx			xxxxx	xxxx	xxxxx			xxxxx	xxxx	xxxxx		
Shared LOS:	*	*	*			*	*	*			*	*	*			*	*	*		
ApproachDel:	xxxxxx					9.9					xxxxxx					xxxxxx				
ApproachLOS:	*					A					*					*				

Wilson Creek Estates
Traffic Impact Analysis

Scenario Report

Scenario:	2015 AM Existing
Command:	Default Command
Volume:	Ex AM
Geometry:	Ex Geo
Impact Fee:	Default Impact Fee
Trip Generation:	AM
Trip Distribution:	Default Trip Distribution
Paths:	Default Paths
Routes:	Default Routes
Configuration:	Ex

Wilson Creek Estates
Traffic Impact Analysis

Level Of Service Computation Report
2000 HCM Operations Method (Future Volume Alternative)

Intersection #1 Oak Glen Rd & Bryant St

Cycle (sec): 60 Critical Vol./Cap. (X): 0.943
Loss Time (sec): 4 (Y+R = 4 sec) Average Delay (sec/veh): 34.0
Optimal Cycle: 97 Level Of Service: C

Approach:	North Bound			South Bound			East Bound			West Bound		
Movement:	L - T - R			L - T - R			L - T - R			L - T - R		
Control:	Protected			Protected			Protected			Protected		
Rights:	Include			Include			Include			Include		
Min. Green:	0	0	0	0	0	0	0	0	0	0	0	0
Lanes:	1 0 2 0 1			1 0 2 0 1			1 0 1 0 1			1 0 1 0 1		
Volume Module:												
Base Vol:	313	358	53	31	353	439	200	95	264	45	213	50
Growth Adj:	1.00	1.00	1.00	1.00	1.00	1.00	1.00	1.10	1.00	1.00	1.10	1.00
Initial Bse:	313	358	53	31	353	439	200	105	264	45	234	50
Added Vol:	0	1	15	0	4	5	2	14	0	45	41	0
PasserByVol:	0	0	0	0	0	0	0	0	0	0	0	0
Initial Fut:	313	359	68	31	357	444	202	119	264	90	275	50
User Adj:	1.00	1.00	1.00	1.00	1.00	1.00	1.00	1.00	1.00	1.00	1.00	1.00
PHF Adj:	0.80	0.80	0.80	0.80	0.80	0.80	0.80	0.80	0.80	0.80	0.80	0.80
PHF Volume:	391	449	85	39	446	555	253	148	330	113	344	63
Reduct Vol:	0	0	0	0	0	0	0	0	0	0	0	0
Reduced Vol:	391	449	85	39	446	555	253	148	330	113	344	63
PCE Adj:	1.00	1.00	1.00	1.00	1.00	1.00	1.00	1.00	1.00	1.00	1.00	1.00
MLF Adj:	1.00	1.00	1.00	1.00	1.00	1.00	1.00	1.00	1.00	1.00	1.00	1.00
Final Vol.:	391	449	85	39	446	555	253	148	330	113	344	63
Saturation Flow Module:												
Sat/Lane:	1800	1800	1800	1800	1800	1800	1800	1800	1800	1800	1800	1800
Adjustment:	0.94	1.00	1.00	0.94	1.00	1.00	0.94	1.00	1.00	0.94	1.00	1.00
Lanes:	1.00	2.00	1.00	1.00	2.00	1.00	1.00	1.00	1.00	1.00	1.00	1.00
Final Sat.:	1692	3600	1800	1692	3600	1800	1692	1800	1800	1692	1800	1800
Capacity Analysis Module:												
Vol/Sat:	0.23	0.12	0.05	0.02	0.12	0.31	0.15	0.08	0.18	0.07	0.19	0.03
Crit Moves:	****					****	****				****	
Green/Cycle:	0.25	0.48	0.48	0.09	0.33	0.33	0.16	0.26	0.26	0.10	0.20	0.20
Volume/Cap:	0.94	0.26	0.10	0.26	0.38	0.94	0.94	0.31	0.69	0.69	0.94	0.17
Delay/Veh:	52.2	9.2	8.5	26.4	15.7	43.4	64.6	18.0	24.2	38.3	56.2	20.0
User DelAdj:	1.00	1.00	1.00	1.00	1.00	1.00	1.00	1.00	1.00	1.00	1.00	1.00
AdjDel/Veh:	52.2	9.2	8.5	26.4	15.7	43.4	64.6	18.0	24.2	38.3	56.2	20.0
HCM2kAvg:	12	3	1	1	3	15	9	2	7	4	11	1

Wilson Creek Estates
Traffic Impact Analysis

Level Of Service Computation Report
2000 HCM Unsignalized Method (Future Volume Alternative)

Intersection #5 Oak Glen Rd & Pendleton Rd

Average Delay (sec/veh): 3.2 Worst Case Level Of Service: B[11.3]

Approach:	North Bound						South Bound						East Bound						West Bound					
Movement:	L	-	T	-	R		L	-	T	-	R		L	-	T	-	R		L	-	T	-	R	
Control:	Stop Sign						Stop Sign						Uncontrolled						Uncontrolled					
Rights:	Include						Include						Include						Include					
Lanes:	0	0	1!	0	0		0	0	1!	0	0		0	0	1!	0	0		0	0	0	1	0	
Volume Module:																								
Base Vol:	26		0		4		0		0		0		0		51		10		0		117		0	
Growth Adj:	1.00	1.00	1.00	1.00	1.00	1.00	1.00	1.00	1.00	1.00	1.00	1.00	1.00	1.00	1.00	1.00	1.00	1.00	1.00	1.00	1.00	1.00	1.00	1.00
Initial Bse:	26		0		4		0		0		0		0		51		10		0		117		0	
Added Vol:	0		1		0		1		3		52		18		10		0		0		30		2	
PasserByVol:	0		0		0		0		0		0		0		0		0		0		0		0	
Initial Fut:	26		1		4		1		3		52		18		61		10		0		147		2	
User Adj:	1.00	1.00	1.00	1.00	1.00	1.00	1.00	1.00	1.00	1.00	1.00	1.00	1.00	1.00	1.00	1.00	1.00	1.00	1.00	1.00	1.00	1.00	1.00	1.00
PHF Adj:	0.84	0.84	0.84	0.84	0.84	0.84	0.84	0.84	0.84	0.84	0.84	0.84	0.84	0.84	0.84	0.84	0.84	0.84	0.84	0.84	0.84	0.84	0.84	0.84
PHF Volume:	31		1		5		1		4		62		21		73		12		0		175		2	
Reduct Vol:	0		0		0		0		0		0		0		0		0		0		0		0	
Final Vol.:	31		1		5		1		4		62		21		73		12		0		175		2	
Critical Gap Module:																								
Critical Gp:	7.1		6.5		6.2		7.1		6.5		6.2		4.1	xxxx	xxxxx	xxxxx	xxxx	xxxxx						
FollowUpTim:	3.5		4.0		3.3		3.5		4.0		3.3		2.2	xxxx	xxxxx	xxxxx	xxxx	xxxxx						
Capacity Module:																								
Cnflict Vol:	330		299		79		301		304		176		177	xxxx	xxxxx	xxxx	xxxx	xxxxx						
Potent Cap.:	627		617		988		656		613		872		1411	xxxx	xxxxx	xxxx	xxxx	xxxxx						
Move Cap.:	573		607		988		644		603		872		1411	xxxx	xxxxx	xxxx	xxxx	xxxxx						
Volume/Cap:	0.05	0.00	0.00	0.00	0.01	0.07	0.02	xxxx	xxxx	xxxx	xxxx	xxxx												
Level Of Service Module:																								
Queue:	xxxxx	xxxx	xxxxx	xxxxx	xxxx	xxxxx							0.0	xxxx	xxxxx	xxxxx	xxxx	xxxxx						
Stopped Del:	xxxxx	xxxx	xxxxx	xxxxx	xxxx	xxxxx							7.6	xxxx	xxxxx	xxxxx	xxxx	xxxxx						
LOS by Move:	*		*		*		*		*		*		A		*		*		*		*		*	
Movement:	LT	-	LTR	-	RT		LT	-	LTR	-	RT		LT	-	LTR	-	RT		LT	-	LTR	-	RT	
Shared Cap.:	xxxx		607	xxxxx			xxxx		847	xxxxx			xxxx	xxxx	xxxxx				xxxx	xxxx	xxxxx			
SharedQueue:	xxxxx		0.2	xxxxx			xxxxx		0.3	xxxxx			xxxxx	xxxx	xxxxx				xxxxx	xxxx	xxxxx			
Shrd StpDel:	xxxxx		11.3	xxxxx			xxxxx		9.6	xxxxx			xxxxx	xxxx	xxxxx				xxxxx	xxxx	xxxxx			
Shared LOS:	*		B		*		*		A		*		*		*		*		*		*		*	
ApproachDel:			11.3						9.6				xxxxxx						xxxxxx					
ApproachLOS:			B						A						*						*			

Wilson Creek Estates
Traffic Impact Analysis

Level Of Service Computation Report
2000 HCM Unsignalized Method (Future Volume Alternative)

Intersection #6 Oak Glen Rd & Casa Blance Rd

Average Delay (sec/veh): 2.4 Worst Case Level Of Service: B[10.0]

Approach:	North Bound					South Bound					East Bound					West Bound				
Movement:	L	-	T	-	R	L	-	T	-	R	L	-	T	-	R	L	-	T	-	R
Control:	Stop Sign					Stop Sign					Uncontrolled					Uncontrolled				
Rights:	Include					Include					Include					Include				
Lanes:	1	0	0	0	0	0	0	0	0	1	0	0	1!	0	0	0	0	1	0	0
Volume Module:																				
Base Vol:	37	0	0	0	0	0	0	0	0	0	0	44	10	0	0	0	79	0		
Growth Adj:	1.00	1.00	1.00	1.00	1.00	1.00	1.00	1.00	1.00	1.00	1.00	1.00	1.00	1.00	1.00	1.00	1.00	1.00		
Initial Bse:	37	0	0	0	0	0	0	0	0	0	0	44	10	0	0	0	79	0		
Added Vol:	0	0	0	0	0	12	4	7	0	0	0	20	0							
PasserByVol:	0	0	0	0	0	0	0	0	0	0	0	0	0							
Initial Fut:	37	0	0	0	0	12	4	51	10	0	0	99	0							
User Adj:	1.00	1.00	1.00	1.00	1.00	1.00	1.00	1.00	1.00	1.00	1.00	1.00	1.00							
PHF Adj:	0.87	0.87	0.87	0.87	0.87	0.87	0.87	0.87	0.87	0.87	0.87	0.87	0.87							
PHF Volume:	43	0	0	0	0	14	5	59	11	0	0	114	0							
Reduct Vol:	0	0	0	0	0	0	0	0	0	0	0	0	0							
Final Vol.:	43	0	0	0	0	14	5	59	11	0	0	114	0							
Critical Gap Module:																				
Critical Gp:	7.1	xxxx	xxxxx	xxxxx	xxxx	6.2	4.1	xxxx	xxxxx	xxxxx	xxxx	xxxxx								
FollowUpTim:	3.5	xxxx	xxxxx	xxxxx	xxxx	3.3	2.2	xxxx	xxxxx	xxxxx	xxxx	xxxxx								
Capacity Module:																				
Cnflict Vol:	194	xxxx	xxxxx	xxxx	xxxx	114	114	xxxx	xxxxx	xxxx	xxxx	xxxxx								
Potent Cap.:	770	xxxx	xxxxx	xxxx	xxxx	944	1488	xxxx	xxxxx	xxxx	xxxx	xxxxx								
Move Cap.:	756	xxxx	xxxxx	xxxx	xxxx	944	1488	xxxx	xxxxx	xxxx	xxxx	xxxxx								
Volume/Cap:	0.06	xxxx	xxxx	xxxx	xxxx	0.01	0.00	xxxx	xxxx	xxxx	xxxx	xxxx								
Level Of Service Module:																				
Queue:	0.2	xxxx	xxxxx	xxxxx	xxxx	0.0	0.0	xxxx	xxxxx	xxxxx	xxxx	xxxxx								
Stopped Del:	10.0	xxxx	xxxxx	xxxxx	xxxx	8.9	7.4	xxxx	xxxxx	xxxxx	xxxx	xxxxx								
LOS by Move:	B	*	*	*	*	A	A	*	*	*	*	*								
Movement:	LT	-	LTR	-	RT	LT	-	LTR	-	RT	LT	-	LTR	-	RT	LT	-	LTR	-	RT
Shared Cap.:	xxxx	xxxx	xxxxx	xxxx	xxxx	xxxxx	xxxx	xxxx	xxxxx	xxxx	xxxx	xxxxx								
SharedQueue:	xxxxx	xxxx	xxxxx	xxxxx	xxxx	xxxxx	xxxxx	xxxx	xxxxx	xxxxx	xxxx	xxxxx								
Shrd StpDel:	xxxxx	xxxx	xxxxx	xxxxx	xxxx	xxxxx	xxxxx	xxxx	xxxxx	xxxxx	xxxx	xxxxx								
Shared LOS:	*	*	*	*	*	*	*	*	*	*	*	*								
ApproachDel:	10.0					8.9					xxxxxx					xxxxxx				
ApproachLOS:	B					A					*					*				

Wilson Creek Estates
Traffic Impact Analysis

Level Of Service Computation Report
2000 HCM Unsignalized Method (Future Volume Alternative)

Intersection #7 Oak Glen Rd & Cherry Croft Rd

Average Delay (sec/veh): 0.1 Worst Case Level Of Service: A[9.9]

Approach:	North Bound					South Bound					East Bound					West Bound				
Movement:	L	-	T	-	R	L	-	T	-	R	L	-	T	-	R	L	-	T	-	R
Control:	Stop Sign					Stop Sign					Uncontrolled					Uncontrolled				
Rights:	Include					Include					Include					Include				
Lanes:	0	0	0	0	0	0	0	0	0	1	1	0	1	0	0	0	0	1	0	0
Volume Module:																				
Base Vol:	0	0	0	0	0	0	1	0	0	0	0	60	0	0	144	0				
Growth Adj:	1.00	1.00	1.00	1.00	1.00	1.00	1.00	1.10	1.00	1.00	1.10	1.00								
Initial Bse:	0	0	0	0	0	1	0	66	0	0	158	0								
Added Vol:	0	0	0	0	0	3	1	28	0	0	83	0								
PasserByVol:	0	0	0	0	0	0	0	0	0	0	0	0								
Initial Fut:	0	0	0	0	0	4	1	94	0	0	241	0								
User Adj:	1.00	1.00	1.00	1.00	1.00	1.00	1.00	1.00	1.00	1.00	1.00	1.00								
PHF Adj:	0.80	0.80	0.80	0.80	0.80	0.80	0.80	0.80	0.80	0.80	0.80	0.80								
PHF Volume:	0	0	0	0	0	5	1	118	0	0	302	0								
Reduct Vol:	0	0	0	0	0	0	0	0	0	0	0	0								
Final Vol.:	0	0	0	0	0	5	1	118	0	0	302	0								
Critical Gap Module:																				
Critical Gp:	xxxxx	xxxx	xxxxx	xxxxx	xxxx	6.2	4.1	xxxx	xxxxx	xxxxx	xxxx	xxxxx								
FollowUpTim:	xxxxx	xxxx	xxxxx	xxxxx	xxxx	3.3	2.2	xxxx	xxxxx	xxxxx	xxxx	xxxxx								
Capacity Module:																				
Cnflict Vol:	xxxx	xxxx	xxxxx	xxxx	xxxx	302	302	xxxx	xxxxx	xxxx	xxxx	xxxxx								
Potent Cap.:	xxxx	xxxx	xxxxx	xxxx	xxxx	743	1271	xxxx	xxxxx	xxxx	xxxx	xxxxx								
Move Cap.:	xxxx	xxxx	xxxxx	xxxx	xxxx	743	1271	xxxx	xxxxx	xxxx	xxxx	xxxxx								
Volume/Cap:	xxxx	xxxx	xxxx	xxxx	xxxx	0.01	0.00	xxxx	xxxx	xxxx	xxxx	xxxx								
Level Of Service Module:																				
Queue:	xxxxx	xxxx	xxxxx	xxxxx	xxxx	0.0	0.0	xxxx	xxxxx	xxxxx	xxxx	xxxxx								
Stopped Del:	xxxxx	xxxx	xxxxx	xxxxx	xxxx	9.9	7.8	xxxx	xxxxx	xxxxx	xxxx	xxxxx								
LOS by Move:	*	*	*	*	*	A	A	*	*	*	*	*								
Movement:	LT - LTR - RT					LT - LTR - RT					LT - LTR - RT					LT - LTR - RT				
Shared Cap.:	xxxx	xxxx	xxxxx	xxxx	xxxx	xxxxx	xxxx	xxxx	xxxxx	xxxx	xxxx	xxxxx								
SharedQueue:	xxxxx	xxxx	xxxxx	xxxxx	xxxx	xxxxx	xxxxx	xxxx	xxxxx	xxxxx	xxxx	xxxxx								
Shrd StpDel:	xxxxx	xxxx	xxxxx	xxxxx	xxxx	xxxxx	xxxxx	xxxx	xxxxx	xxxxx	xxxx	xxxxx								
Shared LOS:	*	*	*	*	*	*	*	*	*	*	*	*								
ApproachDel:	xxxxxx					9.9			xxxxxx				xxxxxx							
ApproachLOS:	*					A			*				*							

Wilson Creek Estates
Traffic Impact Analysis

Level Of Service Computation Report
2000 HCM Unsignalized Method (Future Volume Alternative)

Intersection #11 Oak Glen Rd & O St

Average Delay (sec/veh): 1.5 Worst Case Level Of Service: A[8.7]

Approach:	North Bound			South Bound			East Bound			West Bound		
Movement:	L -	T -	R	L -	T -	R	L -	T -	R	L -	T -	R
Control:	Stop Sign			Stop Sign			Uncontrolled			Uncontrolled		
Rights:	Include			Include			Include			Include		
Lanes:	0 0	1! 0	0	0 0	0 0	1	0 1	0 0	0	0 0	1 0	0
Volume Module:												
Base Vol:	0	0	0	0	0	0	0	44	0	0	79	0
Growth Adj:	1.00	1.00	1.00	1.00	1.00	1.00	1.00	1.00	1.00	1.00	1.00	1.00
Initial Bse:	0	0	0	0	0	0	0	44	0	0	79	0
Added Vol:	0	0	0	0	0	20	7	0	0	0	0	0
PasserByVol:	0	0	0	0	0	0	0	0	0	0	0	0
Initial Fut:	0	0	0	0	0	20	7	44	0	0	79	0
User Adj:	1.00	1.00	1.00	1.00	1.00	1.00	1.00	1.00	1.00	1.00	1.00	1.00
PHF Adj:	0.95	0.95	0.95	0.95	0.95	0.95	0.95	0.95	0.95	0.95	0.95	0.95
PHF Volume:	0	0	0	0	0	21	7	46	0	0	83	0
Reduct Vol:	0	0	0	0	0	0	0	0	0	0	0	0
Final Vol.:	0	0	0	0	0	21	7	46	0	0	83	0
Critical Gap Module:												
Critical Gp:	xxxxx	xxxx	xxxxx	xxxxx	xxxx	6.2	4.1	xxxx	xxxxx	xxxxx	xxxx	xxxxx
FollowUpTim:	xxxxx	xxxx	xxxxx	xxxxx	xxxx	3.3	2.2	xxxx	xxxxx	xxxxx	xxxx	xxxxx
Capacity Module:												
Cnflict Vol:	xxxx	xxxx	xxxxx	xxxx	xxxx	83	83	xxxx	xxxxx	xxxx	xxxx	xxxxx
Potent Cap.:	xxxx	xxxx	xxxxx	xxxx	xxxx	982	1527	xxxx	xxxxx	xxxx	xxxx	xxxxx
Move Cap.:	xxxx	xxxx	xxxxx	xxxx	xxxx	982	1527	xxxx	xxxxx	xxxx	xxxx	xxxxx
Volume/Cap:	xxxx	xxxx	xxxx	xxxx	xxxx	0.02	0.00	xxxx	xxxx	xxxx	xxxx	xxxx
Level Of Service Module:												
Queue:	xxxxx	xxxx	xxxxx	xxxxx	xxxx	0.1	0.0	xxxx	xxxxx	xxxxx	xxxx	xxxxx
Stopped Del:	xxxxx	xxxx	xxxxx	xxxxx	xxxx	8.7	7.4	xxxx	xxxxx	xxxxx	xxxx	xxxxx
LOS by Move:	*	*	*	*	*	A	A	*	*	*	*	*
Movement:	LT -	LTR -	RT	LT -	LTR -	RT	LT -	LTR -	RT	LT -	LTR -	RT
Shared Cap.:	xxxx	0	xxxxx	xxxx	xxxx	xxxxx	xxxx	xxxx	xxxxx	xxxx	xxxx	xxxxx
SharedQueue:	xxxxx	xxxx	xxxxx	xxxxx	xxxx	xxxxx	0.0	xxxx	xxxxx	xxxxx	xxxx	xxxxx
Shrd StpDel:	xxxxx	xxxx	xxxxx	xxxxx	xxxx	xxxxx	7.4	xxxx	xxxxx	xxxxx	xxxx	xxxxx
Shared LOS:	*	*	*	*	*	*	A	*	*	*	*	*
ApproachDel:	xxxxxx			8.7			xxxxxx			xxxxxx		
ApproachLOS:	*			A			*			*		

Wilson Creek Estates
Traffic Impact Analysis

Scenario Report

Scenario:	2015 PM Existing
Command:	Default Command
Volume:	Ex PM
Geometry:	Ex Geo
Impact Fee:	Default Impact Fee
Trip Generation:	PM
Trip Distribution:	Default Trip Distribution
Paths:	Default Paths
Routes:	Default Routes
Configuration:	Ex

Wilson Creek Estates
Traffic Impact Analysis

Level Of Service Computation Report
2000 HCM Operations Method (Future Volume Alternative)

Intersection #1 Oak Glen Rd & Bryant St

Cycle (sec): 60 Critical Vol./Cap. (X): 0.489
Loss Time (sec): 4 (Y+R = 4 sec) Average Delay (sec/veh): 18.3
Optimal Cycle: 21 Level Of Service: B

Approach:	North Bound			South Bound			East Bound			West Bound		
Movement:	L - T - R			L - T - R			L - T - R			L - T - R		
Control:	Protected			Protected			Protected			Protected		
Rights:	Include			Include			Include			Include		
Min. Green:	0	0	0	0	0	0	0	0	0	0	0	0
Lanes:	1 0 2 0 1			1 0 2 0 1			1 0 1 0 1			1 0 1 0 1		
Volume Module:												
Base Vol:	172	203	48	41	261	196	270	169	221	48	107	65
Growth Adj:	1.00	1.00	1.00	1.00	1.00	1.00	1.00	1.10	1.00	1.00	1.10	1.00
Initial Bse:	172	203	48	41	261	196	270	186	221	48	118	65
Added Vol:	0	4	50	0	3	4	6	46	0	30	28	0
PasserByVol:	0	0	0	0	0	0	0	0	0	0	0	0
Initial Fut:	172	207	98	41	264	200	276	232	221	78	146	65
User Adj:	1.00	1.00	1.00	1.00	1.00	1.00	1.00	1.00	1.00	1.00	1.00	1.00
PHF Adj:	1.00	1.00	1.00	1.00	1.00	1.00	1.00	1.00	1.00	1.00	1.00	1.00
PHF Volume:	172	207	98	41	264	200	276	232	221	78	146	65
Reduct Vol:	0	0	0	0	0	0	0	0	0	0	0	0
Reduced Vol:	172	207	98	41	264	200	276	232	221	78	146	65
PCE Adj:	1.00	1.00	1.00	1.00	1.00	1.00	1.00	1.00	1.00	1.00	1.00	1.00
MLF Adj:	1.00	1.00	1.00	1.00	1.00	1.00	1.00	1.00	1.00	1.00	1.00	1.00
Final Vol.:	172	207	98	41	264	200	276	232	221	78	146	65
Saturation Flow Module:												
Sat/Lane:	1800	1800	1800	1800	1800	1800	1800	1800	1800	1800	1800	1800
Adjustment:	0.94	1.00	1.00	0.94	1.00	1.00	0.94	1.00	1.00	0.94	1.00	1.00
Lanes:	1.00	2.00	1.00	1.00	2.00	1.00	1.00	1.00	1.00	1.00	1.00	1.00
Final Sat.:	1692	3600	1800	1692	3600	1800	1692	1800	1800	1692	1800	1800
Capacity Analysis Module:												
Vol/Sat:	0.10	0.06	0.05	0.02	0.07	0.11	0.16	0.13	0.12	0.05	0.08	0.04
Crit Moves:	****					****	****				****	
Green/Cycle:	0.21	0.31	0.31	0.13	0.23	0.23	0.33	0.37	0.37	0.13	0.17	0.17
Volume/Cap:	0.49	0.19	0.18	0.19	0.32	0.49	0.49	0.35	0.33	0.35	0.49	0.22
Delay/Veh:	22.0	15.4	15.4	23.8	19.6	21.1	16.6	14.1	14.0	24.7	24.0	22.1
User DelAdj:	1.00	1.00	1.00	1.00	1.00	1.00	1.00	1.00	1.00	1.00	1.00	1.00
AdjDel/Veh:	22.0	15.4	15.4	23.8	19.6	21.1	16.6	14.1	14.0	24.7	24.0	22.1
HCM2kAvg:	3	2	1	1	2	4	5	3	3	2	3	1

Wilson Creek Estates
Traffic Impact Analysis

Level Of Service Computation Report
2000 HCM Unsignalized Method (Future Volume Alternative)

Intersection #5 Oak Glen Rd & Pendleton Rd

Average Delay (sec/veh): 2.5 Worst Case Level Of Service: B[11.6]

Approach:	North Bound			South Bound			East Bound			West Bound		
Movement:	L - T - R			L - T - R			L - T - R			L - T - R		
Control:	Stop Sign			Stop Sign			Uncontrolled			Uncontrolled		
Rights:	Include			Include			Include			Include		
Lanes:	0 0 1! 0 0			0 0 1! 0 0			0 0 1! 0 0			0 0 1! 0 0		
Volume Module:												
Base Vol:	9	0	3	0	0	0	0	106	23	1	87	0
Growth Adj:	1.00	1.00	1.00	1.00	1.00	1.00	1.00	1.10	1.00	1.00	1.10	1.00
Initial Bse:	9	0	3	0	0	0	0	117	23	1	96	0
Added Vol:	0	3	0	2	2	36	59	34	0	0	20	1
PasserByVol:	0	0	0	0	0	0	0	0	0	0	0	0
Initial Fut:	9	3	3	2	2	36	59	151	23	1	116	1
User Adj:	1.00	1.00	1.00	1.00	1.00	1.00	1.00	1.00	1.00	1.00	1.00	1.00
PHF Adj:	1.00	1.00	1.00	1.00	1.00	1.00	1.00	1.00	1.00	1.00	1.00	1.00
PHF Volume:	9	3	3	2	2	36	59	151	23	1	116	1
Reduct Vol:	0	0	0	0	0	0	0	0	0	0	0	0
Final Vol.:	9	3	3	2	2	36	59	151	23	1	116	1
Critical Gap Module:												
Critical Gp:	7.1	6.5	6.2	7.1	6.5	6.2	4.1	xxxx	xxxxx	4.1	xxxx	xxxxx
FollowUpTim:	3.5	4.0	3.3	3.5	4.0	3.3	2.2	xxxx	xxxxx	2.2	xxxx	xxxxx
Capacity Module:												
Cnflict Vol:	417	399	162	401	410	116	117	xxxx	xxxxx	174	xxxx	xxxxx
Potent Cap.:	549	542	888	563	535	941	1484	xxxx	xxxxx	1415	xxxx	xxxxx
Move Cap.:	510	520	888	541	512	941	1484	xxxx	xxxxx	1415	xxxx	xxxxx
Volume/Cap:	0.02	0.01	0.00	0.00	0.00	0.04	0.04	xxxx	xxxx	0.00	xxxx	xxxx
Level Of Service Module:												
Queue:	xxxxx	xxxx	xxxxx	xxxxx	xxxx	xxxxx	0.1	xxxx	xxxxx	0.0	xxxx	xxxxx
Stopped Del:	xxxxx	xxxx	xxxxx	xxxxx	xxxx	xxxxx	7.5	xxxx	xxxxx	7.5	xxxx	xxxxx
LOS by Move:	*	*	*	*	*	*	A	*	*	A	*	*
Movement:	LT - LTR - RT			LT - LTR - RT			LT - LTR - RT			LT - LTR - RT		
Shared Cap.:	xxxx	560	xxxxx	xxxx	873	xxxxx	xxxx	xxxx	xxxxx	xxxx	xxxx	xxxxx
SharedQueue:	xxxxx	0.1	xxxxx	xxxxx	0.1	xxxxx	xxxxx	xxxx	xxxxx	xxxxx	xxxx	xxxxx
Shrd StpDel:	xxxxx	11.6	xxxxx	xxxxx	9.3	xxxxx	xxxxx	xxxx	xxxxx	xxxxx	xxxx	xxxxx
Shared LOS:	*	B	*	*	A	*	*	*	*	*	*	*
ApproachDel:		11.6			9.3		xxxxxx			xxxxxx		
ApproachLOS:		B			A		*			*		

Wilson Creek Estates
Traffic Impact Analysis

Level Of Service Computation Report
2000 HCM Unsignalized Method (Future Volume Alternative)

Intersection #6 Oak Glen Rd & Casa Blance Rd

Average Delay (sec/veh): 1.4 Worst Case Level Of Service: B[10.3]

Approach:	North Bound					South Bound					East Bound					West Bound				
Movement:	L	-	T	-	R	L	-	T	-	R	L	-	T	-	R	L	-	T	-	R
Control:	Stop Sign					Stop Sign					Uncontrolled					Uncontrolled				
Rights:	Include					Include					Include					Include				
Lanes:	1	0	0	0	0	0	0	0	0	1	0	0	1!	0	0	0	1	0	0	0
Volume Module:																				
Base Vol:	20	0	0	0	0	0	0	0	0	0	0	70	42	0	0	1	69	0	0	0
Growth Adj:	1.00	1.00	1.00	1.00	1.00	1.00	1.00	1.00	1.00	1.00	1.00	1.10	1.00	1.00	1.00	1.00	1.10	1.00	1.00	1.00
Initial Bse:	20	0	0	0	0	0	0	0	0	0	0	77	42	0	0	1	76	0	0	0
Added Vol:	0	0	0	0	0	0	0	0	0	8	13	23	0	0	0	0	13	0	0	0
PasserByVol:	0	0	0	0	0	0	0	0	0	0	0	0	0	0	0	0	0	0	0	0
Initial Fut:	20	0	0	0	0	0	0	0	0	8	13	100	42	0	0	1	89	0	0	0
User Adj:	1.00	1.00	1.00	1.00	1.00	1.00	1.00	1.00	1.00	1.00	1.00	1.00	1.00	1.00	1.00	1.00	1.00	1.00	1.00	1.00
PHF Adj:	1.00	1.00	1.00	1.00	1.00	1.00	1.00	1.00	1.00	1.00	1.00	1.00	1.00	1.00	1.00	1.00	1.00	1.00	1.00	1.00
PHF Volume:	20	0	0	0	0	0	0	0	0	8	13	100	42	0	0	1	89	0	0	0
Reduct Vol:	0	0	0	0	0	0	0	0	0	0	0	0	0	0	0	0	0	0	0	0
Final Vol.:	20	0	0	0	0	0	0	0	0	8	13	100	42	0	0	1	89	0	0	0
Critical Gap Module:																				
Critical Gp:	7.1	xxxx	xxxxx	xxxxx	xxxx					6.2	4.1	xxxx	xxxxx			4.1	xxxx	xxxxx		
FollowUpTim:	3.5	xxxx	xxxxx	xxxxx	xxxx					3.3	2.2	xxxx	xxxxx			2.2	xxxx	xxxxx		
Capacity Module:																				
Cnflict Vol:	242	xxxx	xxxxx	xxxx	xxxx					89	89	xxxx	xxxxx			142	xxxx	xxxxx		
Potent Cap.:	716	xxxx	xxxxx	xxxx	xxxx					975	1519	xxxx	xxxxx			1453	xxxx	xxxxx		
Move Cap.:	705	xxxx	xxxxx	xxxx	xxxx					975	1519	xxxx	xxxxx			1453	xxxx	xxxxx		
Volume/Cap:	0.03	xxxx	xxxx	xxxx	xxxx					0.01	0.01	xxxx	xxxx			0.00	xxxx	xxxx		
Level Of Service Module:																				
Queue:	0.1	xxxx	xxxxx	xxxxx	xxxx					0.0	0.0	xxxx	xxxxx			0.0	xxxx	xxxxx		
Stopped Del:	10.3	xxxx	xxxxx	xxxxx	xxxx					8.7	7.4	xxxx	xxxxx			7.5	xxxx	xxxxx		
LOS by Move:	B	*	*	*	*					A	A	*	*			A	*	*		
Movement:	LT	-	LTR	-	RT	LT	-	LTR	-	RT	LT	-	LTR	-	RT	LT	-	LTR	-	RT
Shared Cap.:	xxxx	xxxx	xxxxx	xxxx	xxxx	xxxxx	xxxx	xxxx	xxxxx		xxxx	xxxx	xxxxx			xxxx	xxxx	xxxxx		
SharedQueue:	xxxxx	xxxx	xxxxx	xxxxx	xxxx	xxxxx	xxxxx	xxxx	xxxxx		0.0	xxxx	xxxxx							
Shrd StpDel:	xxxxx	xxxx	xxxxx	xxxxx	xxxx	xxxxx	xxxxx	xxxx	xxxxx		7.5	xxxx	xxxxx							
Shared LOS:	*	*	*	*	*	*	*	*	*		A	*	*							
ApproachDel:			10.3					8.7				xxxxxx					xxxxxx			
ApproachLOS:			B					A				*					*			

Wilson Creek Estates
Traffic Impact Analysis

Level Of Service Computation Report
2000 HCM Unsignalized Method (Future Volume Alternative)

Intersection #7 Oak Glen Rd & Cherry Croft Rd

Average Delay (sec/veh): 0.2 Worst Case Level Of Service: A[9.7]

Approach:	North Bound					South Bound					East Bound					West Bound				
Movement:	L	-	T	-	R	L	-	T	-	R	L	-	T	-	R	L	-	T	-	R
Control:	Stop Sign					Stop Sign					Uncontrolled					Uncontrolled				
Rights:	Include					Include					Include					Include				
Lanes:	0	0	0	0	0	0	0	1!	0	0	1	0	1	0	0	0	0	1	0	0
Volume Module:																				
Base Vol:	0	0	0	1	0	0	2	137	0	0	96	0								
Growth Adj:	1.00	1.00	1.00	1.00	1.00	1.00	1.00	1.10	1.00	1.00	1.10	1.00								
Initial Bse:	0	0	0	1	0	0	2	151	0	0	106	0								
Added Vol:	0	0	0	0	0	2	3	93	0	0	56	0								
PasserByVol:	0	0	0	0	0	0	0	0	0	0	0	0								
Initial Fut:	0	0	0	1	0	2	5	244	0	0	162	0								
User Adj:	1.00	1.00	1.00	1.00	1.00	1.00	1.00	1.00	1.00	1.00	1.00	1.00								
PHF Adj:	1.00	1.00	1.00	1.00	1.00	1.00	1.00	1.00	1.00	1.00	1.00	1.00								
PHF Volume:	0	0	0	1	0	2	5	244	0	0	162	0								
Reduct Vol:	0	0	0	0	0	0	0	0	0	0	0	0								
Final Vol.:	0	0	0	1	0	2	5	244	0	0	162	0								
Critical Gap Module:																				
Critical Gp:	xxxxx	xxxx	xxxxx	6.4	xxxx	6.2	4.1	xxxx	xxxxx	xxxxx	xxxx	xxxxx								
FollowUpTim:	xxxxx	xxxx	xxxxx	3.5	xxxx	3.3	2.2	xxxx	xxxxx	xxxxx	xxxx	xxxxx								
Capacity Module:																				
Cnflict Vol:	xxxx	xxxx	xxxxx	415	xxxx	162	162	xxxx	xxxxx	xxxx	xxxx	xxxxx								
Potent Cap.:	xxxx	xxxx	xxxxx	597	xxxx	889	1430	xxxx	xxxxx	xxxx	xxxx	xxxxx								
Move Cap.:	xxxx	xxxx	xxxxx	596	xxxx	889	1430	xxxx	xxxxx	xxxx	xxxx	xxxxx								
Volume/Cap:	xxxx	xxxx	xxxx	0.00	xxxx	0.00	0.00	xxxx	xxxx	xxxx	xxxx	xxxx								

Level Of Service Module:												
Queue:	xxxxx	xxxx	xxxxx	xxxxx	xxxx	xxxxx	0.0	xxxx	xxxxx	xxxxx	xxxx	xxxxx
Stopped Del:	xxxxx	xxxx	xxxxx	xxxxx	xxxx	xxxxx	7.5	xxxx	xxxxx	xxxxx	xxxx	xxxxx
LOS by Move:	*	*	*	*	*	*	A	*	*	*	*	*
Movement:	LT -	LTR -	RT	LT -	LTR -	RT	LT -	LTR -	RT	LT -	LTR -	RT
Shared Cap.:	xxxx	xxxx	xxxxx	xxxx	764	xxxxx	xxxx	xxxx	xxxxx	xxxx	xxxx	xxxxx
SharedQueue:	xxxxx	xxxx	xxxxx	xxxxx	0.0	xxxxx	xxxxx	xxxx	xxxxx	xxxxx	xxxx	xxxxx
Shrd StpDel:	xxxxx	xxxx	xxxxx	xxxxx	9.7	xxxxx	xxxxx	xxxx	xxxxx	xxxxx	xxxx	xxxxx
Shared LOS:	*	*	*	*	A	*	*	*	*	*	*	*
ApproachDel:	xxxxxx				9.7		xxxxxx			xxxxxx		
ApproachLOS:	*				A		*			*		

Wilson Creek Estates
Traffic Impact Analysis

Level Of Service Computation Report
2000 HCM Unsignalized Method (Future Volume Alternative)

****

Intersection #11 Oak Glen Rd & O St

****

Average Delay (sec/veh): 1.5 Worst Case Level Of Service: A[8.7]

****

Approach:	North Bound			South Bound			East Bound			West Bound		
Movement:	L - T - R			L - T - R			L - T - R			L - T - R		
Control:	Stop Sign			Stop Sign			Uncontrolled			Uncontrolled		
Rights:	Include			Include			Include			Include		
Lanes:	0 0 1! 0 0			0 0 0 0 1			0 1 0 0 0			0 0 1 0 0		
Volume Module:												
Base Vol:	0	0	0	0	0	0	0	70	0	0	69	0
Growth Adj:	1.00	1.00	1.00	1.00	1.00	1.00	1.00	1.10	1.00	1.00	1.10	1.00
Initial Bse:	0	0	0	0	0	0	0	77	0	0	76	0
Added Vol:	0	0	0	0	0	13	23	0	0	0	0	0
PasserByVol:	0	0	0	0	0	0	0	0	0	0	0	0
Initial Fut:	0	0	0	0	0	13	23	77	0	0	76	0
User Adj:	1.00	1.00	1.00	1.00	1.00	1.00	1.00	1.00	1.00	1.00	1.00	1.00
PHF Adj:	1.00	1.00	1.00	1.00	1.00	1.00	1.00	1.00	1.00	1.00	1.00	1.00
PHF Volume:	0	0	0	0	0	13	23	77	0	0	76	0
Reduct Vol:	0	0	0	0	0	0	0	0	0	0	0	0
Final Vol.:	0	0	0	0	0	13	23	77	0	0	76	0
Critical Gap Module:												
Critical Gp:	xxxxx	xxxx	xxxxx	xxxxx	xxxx	6.2	4.1	xxxx	xxxxx	xxxxx	xxxx	xxxxx
FollowUpTim:	xxxxx	xxxx	xxxxx	xxxxx	xxxx	3.3	2.2	xxxx	xxxxx	xxxxx	xxxx	xxxxx
Capacity Module:												
Cnflict Vol:	xxxx	xxxx	xxxxx	xxxx	xxxx	76	76	xxxx	xxxxx	xxxx	xxxx	xxxxx
Potent Cap.:	xxxx	xxxx	xxxxx	xxxx	xxxx	991	1536	xxxx	xxxxx	xxxx	xxxx	xxxxx
Move Cap.:	xxxx	xxxx	xxxxx	xxxx	xxxx	991	1536	xxxx	xxxxx	xxxx	xxxx	xxxxx
Volume/Cap:	xxxx	xxxx	xxxx	xxxx	xxxx	0.01	0.01	xxxx	xxxx	xxxx	xxxx	xxxx
Level Of Service Module:												
Queue:	xxxxx	xxxx	xxxxx	xxxxx	xxxx	0.0	0.0	xxxx	xxxxx	xxxxx	xxxx	xxxxx
Stopped Del:	xxxxx	xxxx	xxxxx	xxxxx	xxxx	8.7	7.4	xxxx	xxxxx	xxxxx	xxxx	xxxxx
LOS by Move:	*	*	*	*	*	A	A	*	*	*	*	*
Movement:	LT - LTR - RT			LT - LTR - RT			LT - LTR - RT			LT - LTR - RT		
Shared Cap.:	xxxx	0	xxxxx	xxxx	xxxx	xxxxx	xxxx	xxxx	xxxxx	xxxx	xxxx	xxxxx
SharedQueue:	xxxxx	xxxx	xxxxx	xxxxx	xxxx	xxxxx	0.0	xxxx	xxxxx	xxxxx	xxxx	xxxxx
Shrd StpDel:	xxxxx	xxxx	xxxxx	xxxxx	xxxx	xxxxx	7.4	xxxx	xxxxx	xxxxx	xxxx	xxxxx
Shared LOS:	*	*	*	*	*	*	A	*	*	*	*	*
ApproachDel:	xxxxxx			8.7			xxxxxx			xxxxxx		
ApproachLOS:	*			A			*			*		

Wilson Creek Estates
Traffic Impact Analysis

Scenario Report

Scenario:	2040 AM
Command:	Default Command
Volume:	2040 AM No Bld
Geometry:	2040 Geo
Impact Fee:	Default Impact Fee
Trip Generation:	AM
Trip Distribution:	Default Trip Distribution
Paths:	Default Paths
Routes:	Default Routes
Configuration:	2040

Wilson Creek Estates
Traffic Impact Analysis

Level Of Service Computation Report
2000 HCM Operations Method (Base Volume Alternative)

Intersection #1 Oak Glen Rd & Bryant St

Cycle (sec): 60 Critical Vol./Cap. (X): 0.665
Loss Time (sec): 4 (Y+R = 4 sec) Average Delay (sec/veh): 18.9
Optimal Cycle: 31 Level Of Service: B

Approach:	North Bound			South Bound			East Bound			West Bound		
Movement:	L - T - R			L - T - R			L - T - R			L - T - R		
Control:	Protected			Protected			Protected			Protected		
Rights:	Include			Include			Include			Include		
Min. Green:	0	0	0	0	0	0	0	0	0	0	0	0
Lanes:	1 0 2 0 1			1 0 2 0 1			1 0 1 0 1			1 0 1 0 1		
Volume Module:												
Base Vol:	274	537	79	46	530	385	175	131	231	67	293	74
Growth Adj:	1.00	1.00	1.00	1.00	1.00	1.00	1.00	1.10	1.00	1.00	1.10	1.00
Initial Bse:	274	537	79	46	530	385	175	144	231	67	322	74
User Adj:	1.00	1.00	1.00	1.00	1.00	1.00	1.00	1.00	1.00	1.00	1.00	1.00
PHF Adj:	1.00	1.00	1.00	1.00	1.00	1.00	1.00	1.00	1.00	1.00	1.00	1.00
PHF Volume:	274	537	79	46	530	385	175	144	231	67	322	74
Reduct Vol:	0	0	0	0	0	0	0	0	0	0	0	0
Reduced Vol:	274	537	79	46	530	385	175	144	231	67	322	74
PCE Adj:	1.00	1.00	1.00	1.00	1.00	1.00	1.00	1.00	1.00	1.00	1.00	1.00
MLF Adj:	1.00	1.00	1.00	1.00	1.00	1.00	1.00	1.00	1.00	1.00	1.00	1.00
Final Vol.:	274	537	79	46	530	385	175	144	231	67	322	74
Saturation Flow Module:												
Sat/Lane:	1900	1900	1900	1900	1900	1900	1900	1900	1900	1900	1900	1900
Adjustment:	0.95	0.95	1.00	0.95	0.95	1.00	0.95	1.00	1.00	0.95	1.00	1.00
Lanes:	1.00	2.00	1.00	1.00	2.00	1.00	1.00	1.00	1.00	1.00	1.00	1.00
Final Sat.:	1805	3610	1900	1805	3610	1900	1805	1900	1900	1805	1900	1900
Capacity Analysis Module:												
Vol/Sat:	0.15	0.15	0.04	0.03	0.15	0.20	0.10	0.08	0.12	0.04	0.17	0.04
Crit Moves:	****					****	****				****	
Green/Cycle:	0.23	0.45	0.45	0.08	0.30	0.30	0.15	0.31	0.31	0.09	0.25	0.25
Volume/Cap:	0.67	0.33	0.09	0.33	0.48	0.67	0.67	0.25	0.40	0.40	0.67	0.15
Delay/Veh:	25.2	10.6	9.4	27.5	17.3	21.1	30.6	15.8	16.8	27.1	23.6	17.5
User DelAdj:	1.00	1.00	1.00	1.00	1.00	1.00	1.00	1.00	1.00	1.00	1.00	1.00
AdjDel/Veh:	25.2	10.6	9.4	27.5	17.3	21.1	30.6	15.8	16.8	27.1	23.6	17.5
HCM2kAvg:	6	3	1	1	5	7	4	2	4	2	7	1

Wilson Creek Estates
Traffic Impact Analysis

Level Of Service Computation Report
2000 HCM Unsignalized Method (Base Volume Alternative)

Intersection #5 Oak Glen Rd & Pendleton Rd

Average Delay (sec/veh): 1.2 Worst Case Level Of Service: B[10.2]

Approach:	North Bound						South Bound						East Bound						West Bound					
Movement:	L	-	T	-	R		L	-	T	-	R		L	-	T	-	R		L	-	T	-	R	
Control:	Stop Sign						Stop Sign						Uncontrolled						Uncontrolled					
Rights:	Include						Include						Include						Include					
Lanes:	0	0	1!	0	0		0	0	1!	0	0		0	0	0	1	0		0	0	1	0	0	
Volume Module:																								
Base Vol:	33		0		5		0		0		0		0		77		13		0		176		0	
Growth Adj:	1.00	1.00	1.00	1.00	1.00	1.00	1.00	1.10	1.00	1.00	1.10	1.00
Initial Bse:	33		0		5		0		0		0		0		85		13		0		194		0	
User Adj:	1.00	1.00	1.00	1.00	1.00	1.00	1.00	1.00	1.00	1.00	1.00	1.00
PHF Adj:	1.00	1.00	1.00	1.00	1.00	1.00	1.00	1.00	1.00	1.00	1.00	1.00
PHF Volume:	33		0		5		0		0		0		0		85		13		0		194		0	
Reduct Vol:	0		0		0		0		0		0		0		0		0		0		0		0	
Final Vol.:	33		0		5		0		0		0		0		85		13		0		194		0	
Critical Gap Module:																								
Critical Gp:	6.4	xxxx		6.2	xxxxx	xxxx	xxxxx	xxxxx	xxxx	xxxxx	xxxxx	xxxx	xxxxx
FollowUpTim:	3.5	xxxx		3.3	xxxxx	xxxx	xxxxx	xxxxx	xxxx	xxxxx	xxxxx	xxxx	xxxxx
Capacity Module:																								
Cnflict Vol:	285	xxxx		91	xxxx	xxxx	xxxxx	xxxx	xxxx	xxxxx	xxxx	xxxx	xxxxx
Potent Cap.:	710	xxxx		972	xxxx	xxxx	xxxxx	xxxx	xxxx	xxxxx	xxxx	xxxx	xxxxx
Move Cap.:	710	xxxx		972	xxxx	xxxx	xxxxx	xxxx	xxxx	xxxxx	xxxx	xxxx	xxxxx
Volume/Cap:	0.05	xxxx		0.01	xxxx	xxxx	xxxx	xxxx	xxxx	xxxx	xxxx	xxxx	xxxx
Level Of Service Module:																								
Queue:	xxxxx	xxxx	xxxxx	xxxxx	xxxx	xxxxx	xxxxx	xxxx	xxxxx	xxxxx	xxxx	xxxxx
Stopped Del:	xxxxx	xxxx	xxxxx	xxxxx	xxxx	xxxxx	xxxxx	xxxx	xxxxx	xxxxx	xxxx	xxxxx
LOS by Move:	*	*	*	*	*	*	*	*	*	*	*	*
Movement:	LT	-	LTR	-	RT		LT	-	LTR	-	RT		LT	-	LTR	-	RT		LT	-	LTR	-	RT	
Shared Cap.:	xxxx		736	xxxxx	xxxx		0	xxxxx	xxxx	xxxx	xxxxx	xxxx	xxxx	xxxxx
SharedQueue:	xxxxx		0.2	xxxxx	xxxxx	xxxx	xxxxx	xxxxx	xxxx	xxxxx	xxxxx	xxxx	xxxxx
Shrd StpDel:	xxxxx		10.2	xxxxx	xxxxx	xxxx	xxxxx	xxxxx	xxxx	xxxxx	xxxxx	xxxx	xxxxx
Shared LOS:	*		B	*	*	*	*	*	*	*	*	*	*
ApproachDel:			10.2			xxxxxx			xxxxxx			xxxxxx	
ApproachLOS:			B			*			*			*	

Wilson Creek Estates
Traffic Impact Analysis

Level Of Service Computation Report
2000 HCM Unsignalized Method (Base Volume Alternative)

Intersection #6 Oak Glen Rd & Casa Blance Rd

Average Delay (sec/veh): 2.0 Worst Case Level Of Service: A[10.0]

Approach:	North Bound					South Bound					East Bound					West Bound				
Movement:	L	-	T	-	R	L	-	T	-	R	L	-	T	-	R	L	-	T	-	R
Control:	Stop Sign					Stop Sign					Uncontrolled					Uncontrolled				
Rights:	Include					Include					Include					Include				
Lanes:	1	0	0	0	0	0	0	1!	0	0	0	0	0	1	0	0	0	1	0	0
Volume Module:																				
Base Vol:	56	0	0	0	0	0	0	0	0	0	0	66	15	0	119	0				
Growth Adj:	1.00	1.00	1.00	1.00	1.00	1.00	1.00	1.00	1.00	1.00	1.10	1.00	1.00	1.10	1.00					
Initial Bse:	56	0	0	0	0	0	0	0	0	0	73	15	0	131	0					
User Adj:	1.00	1.00	1.00	1.00	1.00	1.00	1.00	1.00	1.00	1.00	1.00	1.00	1.00	1.00	1.00					
PHF Adj:	1.00	1.00	1.00	1.00	1.00	1.00	1.00	1.00	1.00	1.00	1.00	1.00	1.00	1.00	1.00					
PHF Volume:	56	0	0	0	0	0	0	0	0	0	73	15	0	131	0					
Reduct Vol:	0	0	0	0	0	0	0	0	0	0	0	0	0	0	0					
Final Vol.:	56	0	0	0	0	0	0	0	0	0	73	15	0	131	0					
Critical Gap Module:																				
Critical Gp:	6.4	xxxx	xxxxx	xxxxx	xxxx	xxxxx	xxxxx	xxxx	xxxxx	xxxxx	xxxx	xxxxx								
FollowUpTim:	3.5	xxxx	xxxxx	xxxxx	xxxx	xxxxx	xxxxx	xxxx	xxxxx	xxxxx	xxxx	xxxxx								
Capacity Module:																				
Cnflict Vol:	211	xxxx	xxxxx	xxxx	xxxx	xxxxx	xxxx	xxxx	xxxxx	xxxx	xxxx	xxxxx								
Potent Cap.:	782	xxxx	xxxxx	xxxx	xxxx	xxxxx	xxxx	xxxx	xxxxx	xxxx	xxxx	xxxxx								
Move Cap.:	782	xxxx	xxxxx	xxxx	xxxx	xxxxx	xxxx	xxxx	xxxxx	xxxx	xxxx	xxxxx								
Volume/Cap:	0.07	xxxx	xxxx	xxxx	xxxx	xxxx	xxxx	xxxx	xxxx	xxxx	xxxx	xxxx								
Level Of Service Module:																				
Queue:	0.2	xxxx	xxxxx	xxxxx	xxxx	xxxxx	xxxxx	xxxx	xxxxx	xxxxx	xxxx	xxxxx								
Stopped Del:	10.0	xxxx	xxxxx	xxxxx	xxxx	xxxxx	xxxxx	xxxx	xxxxx	xxxxx	xxxx	xxxxx								
LOS by Move:	A	*	*	*	*	*	*	*	*	*	*	*								
Movement:	LT	-	LTR	-	RT	LT	-	LTR	-	RT	LT	-	LTR	-	RT	LT	-	LTR	-	RT
Shared Cap.:	xxxx	xxxx	xxxxx	xxxx	0	xxxxx	xxxx	xxxx	xxxxx	xxxx	xxxx	xxxxx								
SharedQueue:	xxxxx	xxxx	xxxxx	xxxxx	xxxx	xxxxx	xxxxx	xxxx	xxxxx	xxxxx	xxxx	xxxxx								
Shrd StpDel:	xxxxx	xxxx	xxxxx	xxxxx	xxxx	xxxxx	xxxxx	xxxx	xxxxx	xxxxx	xxxx	xxxxx								
Shared LOS:	*	*	*	*	*	*	*	*	*	*	*	*								
ApproachDel:	10.0			xxxxxx			xxxxxx				xxxxxx									
ApproachLOS:	A			*			*				*									

Wilson Creek Estates
Traffic Impact Analysis

Level Of Service Computation Report
2000 HCM Unsignalized Method (Base Volume Alternative)

Intersection #7 Oak Glen Rd & Cherry Croft Rd

Average Delay (sec/veh): 0.1 Worst Case Level Of Service: A[9.5]

Approach:	North Bound					South Bound					East Bound					West Bound				
Movement:	L	-	T	-	R	L	-	T	-	R	L	-	T	-	R	L	-	T	-	R
Control:	Stop Sign					Stop Sign					Uncontrolled					Uncontrolled				
Rights:	Include					Include					Include					Include				
Lanes:	0	0	0	0	0	0	0	0	0	1	1	0	1	0	0	0	0	1	0	0
Volume Module:																				
Base Vol:	0	0	0	0	0	2	0	90	0	0	216	0								
Growth Adj:	1.00	1.00	1.00	1.00	1.00	1.00	1.00	1.10	1.00	1.00	1.10	1.00								
Initial Bse:	0	0	0	0	0	2	0	99	0	0	238	0								
User Adj:	1.00	1.00	1.00	1.00	1.00	1.00	1.00	1.00	1.00	1.00	1.00	1.00								
PHF Adj:	1.00	1.00	1.00	1.00	1.00	1.00	1.00	1.00	1.00	1.00	1.00	1.00								
PHF Volume:	0	0	0	0	0	2	0	99	0	0	238	0								
Reduct Vol:	0	0	0	0	0	0	0	0	0	0	0	0								
Final Vol.:	0	0	0	0	0	2	0	99	0	0	238	0								
Critical Gap Module:																				
Critical Gp:	xxxxx	xxxx	xxxxx	xxxxx	xxxx	6.2	xxxxx	xxxx	xxxxx	xxxxx	xxxx	xxxxx								
FollowUpTim:	xxxxx	xxxx	xxxxx	xxxxx	xxxx	3.3	xxxxx	xxxx	xxxxx	xxxxx	xxxx	xxxxx								
Capacity Module:																				
Cnflict Vol:	xxxx	xxxx	xxxxx	xxxx	xxxx	238	xxxx	xxxx	xxxxx	xxxx	xxxx	xxxxx								
Potent Cap.:	xxxx	xxxx	xxxxx	xxxx	xxxx	806	xxxx	xxxx	xxxxx	xxxx	xxxx	xxxxx								
Move Cap.:	xxxx	xxxx	xxxxx	xxxx	xxxx	806	xxxx	xxxx	xxxxx	xxxx	xxxx	xxxxx								
Volume/Cap:	xxxx	xxxx	xxxx	xxxx	xxxx	0.00	xxxx	xxxx	xxxx	xxxx	xxxx	xxxx								
Level Of Service Module:																				
Queue:	xxxxx	xxxx	xxxxx	xxxxx	xxxx	0.0	xxxxx	xxxx	xxxxx	xxxxx	xxxx	xxxxx								
Stopped Del:	xxxxx	xxxx	xxxxx	xxxxx	xxxx	9.5	xxxxx	xxxx	xxxxx	xxxxx	xxxx	xxxxx								
LOS by Move:	*	*	*	*	*	A	*	*	*	*	*	*								

Movement:	LT	-	LTR	-	RT	LT	-	LTR	-	RT	LT	-	LTR	-	RT	LT	-	LTR	-	RT
Shared Cap.:	xxxx	xxxx	xxxxx	xxxx	xxxx	xxxxx	xxxx	xxxx	xxxxx	xxxx	xxxx	xxxxx								
SharedQueue:	xxxxx	xxxx	xxxxx	xxxxx	xxxx	xxxxx	xxxxx	xxxx	xxxxx	xxxxx	xxxx	xxxxx								
Shrd StpDel:	xxxxx	xxxx	xxxxx	xxxxx	xxxx	xxxxx	xxxxx	xxxx	xxxxx	xxxxx	xxxx	xxxxx								
Shared LOS:	*	*	*	*	*	*	*	*	*	*	*	*								
ApproachDel:	xxxxxx				9.5		xxxxxx				xxxxxx									
ApproachLOS:	*				A		*				*									

Wilson Creek Estates
Traffic Impact Analysis

Scenario Report

Scenario:	2040 PM
Command:	Default Command
Volume:	2040 PM No Bld
Geometry:	2040 Geo
Impact Fee:	Default Impact Fee
Trip Generation:	PM
Trip Distribution:	Default Trip Distribution
Paths:	Default Paths
Routes:	Default Routes
Configuration:	2040

Wilson Creek Estates
Traffic Impact Analysis

Level Of Service Computation Report
2000 HCM Operations Method (Base Volume Alternative)

Intersection #1 Oak Glen Rd & Bryant St

Cycle (sec): 60 Critical Vol./Cap. (X): 0.405
Loss Time (sec): 4 (Y+R = 4 sec) Average Delay (sec/veh): 18.0
Optimal Cycle: 19 Level Of Service: B

Approach:	North Bound			South Bound			East Bound			West Bound		
Movement:	L - T - R			L - T - R			L - T - R			L - T - R		
Control:	Protected			Protected			Protected			Protected		
Rights:	Include			Include			Include			Include		
Min. Green:	0	0	0	0	0	0	0	0	0	0	0	0
Lanes:	1 0 2 0 1			1 0 2 0 1			1 0 1 0 1			1 0 1 0 1		
Volume Module:												
Base Vol:	151	305	71	61	392	172	237	148	194	71	94	96
Growth Adj:	1.00	1.00	1.00	1.00	1.00	1.00	1.00	1.10	1.00	1.00	1.10	1.00
Initial Bse:	151	305	71	61	392	172	237	163	194	71	103	96
User Adj:	1.00	1.00	1.00	1.00	1.00	1.00	1.00	1.00	1.00	1.00	1.00	1.00
PHF Adj:	1.00	1.00	1.00	1.00	1.00	1.00	1.00	1.00	1.00	1.00	1.00	1.00
PHF Volume:	151	305	71	61	392	172	237	163	194	71	103	96
Reduct Vol:	0	0	0	0	0	0	0	0	0	0	0	0
Reduced Vol:	151	305	71	61	392	172	237	163	194	71	103	96
PCE Adj:	1.00	1.00	1.00	1.00	1.00	1.00	1.00	1.00	1.00	1.00	1.00	1.00
MLF Adj:	1.00	1.00	1.00	1.00	1.00	1.00	1.00	1.00	1.00	1.00	1.00	1.00
Final Vol.:	151	305	71	61	392	172	237	163	194	71	103	96
Saturation Flow Module:												
Sat/Lane:	1900	1900	1900	1900	1900	1900	1900	1900	1900	1900	1900	1900
Adjustment:	0.95	0.95	1.00	0.95	0.95	1.00	0.95	1.00	1.00	0.95	1.00	1.00
Lanes:	1.00	2.00	1.00	1.00	2.00	1.00	1.00	1.00	1.00	1.00	1.00	1.00
Final Sat.:	1805	3610	1900	1805	3610	1900	1805	1900	1900	1805	1900	1900
Capacity Analysis Module:												
Vol/Sat:	0.08	0.08	0.04	0.03	0.11	0.09	0.13	0.09	0.10	0.04	0.05	0.05
Crit Moves:	****				****		****				****	
Green/Cycle:	0.21	0.34	0.34	0.14	0.27	0.27	0.32	0.33	0.33	0.13	0.13	0.13
Volume/Cap:	0.40	0.25	0.11	0.25	0.40	0.34	0.40	0.26	0.31	0.31	0.40	0.38
Delay/Veh:	21.3	14.4	13.7	23.7	18.3	18.1	16.2	14.9	15.2	24.5	24.8	24.6
User DelAdj:	1.00	1.00	1.00	1.00	1.00	1.00	1.00	1.00	1.00	1.00	1.00	1.00
AdjDel/Veh:	21.3	14.4	13.7	23.7	18.3	18.1	16.2	14.9	15.2	24.5	24.8	24.6
HCM2kAvg:	3	2	1	1	3	3	4	2	3	2	2	2

Wilson Creek Estates
Traffic Impact Analysis

Level Of Service Computation Report
2000 HCM Unsignalized Method (Base Volume Alternative)

Intersection #5 Oak Glen Rd & Pendleton Rd

Average Delay (sec/veh): 0.5 Worst Case Level Of Service: B[10.3]

Approach:	North Bound			South Bound			East Bound			West Bound		
Movement:	L - T - R			L - T - R			L - T - R			L - T - R		
Control:	Stop Sign			Stop Sign			Uncontrolled			Uncontrolled		
Rights:	Include			Include			Include			Include		
Lanes:	0 0 1! 0 0			0 0 1! 0 0			0 0 0 1 0			0 1 0 0 0		
Volume Module:												
Base Vol:	12	0	4	0	0	0	0	159	29	2	131	0
Growth Adj:	1.00	1.00	1.00	1.00	1.00	1.00	1.00	1.10	1.00	1.00	1.10	1.00
Initial Bse:	12	0	4	0	0	0	0	175	29	2	144	0
User Adj:	1.00	1.00	1.00	1.00	1.00	1.00	1.00	1.00	1.00	1.00	1.00	1.00
PHF Adj:	1.00	1.00	1.00	1.00	1.00	1.00	1.00	1.00	1.00	1.00	1.00	1.00
PHF Volume:	12	0	4	0	0	0	0	175	29	2	144	0
Reduct Vol:	0	0	0	0	0	0	0	0	0	0	0	0
Final Vol.:	12	0	4	0	0	0	0	175	29	2	144	0
Critical Gap Module:												
Critical Gp:	6.4	xxxx	6.2	xxxxx	xxxx	xxxxx	xxxxx	xxxx	xxxxx	4.1	xxxx	xxxxx
FollowUpTim:	3.5	xxxx	3.3	xxxxx	xxxx	xxxxx	xxxxx	xxxx	xxxxx	2.2	xxxx	xxxxx
Capacity Module:												
Cnflict Vol:	338	xxxx	189	xxxx	xxxx	xxxxx	xxxx	xxxx	xxxxx	204	xxxx	xxxxx
Potent Cap.:	662	xxxx	858	xxxx	xxxx	xxxxx	xxxx	xxxx	xxxxx	1380	xxxx	xxxxx
Move Cap.:	661	xxxx	858	xxxx	xxxx	xxxxx	xxxx	xxxx	xxxxx	1380	xxxx	xxxxx
Volume/Cap:	0.02	xxxx	0.00	xxxx	xxxx	xxxx	xxxx	xxxx	xxxx	0.00	xxxx	xxxx
Level Of Service Module:												
Queue:	xxxxx	xxxx	xxxxx	xxxxx	xxxx	xxxxx	xxxxx	xxxx	xxxxx	0.0	xxxx	xxxxx
Stopped Del:	xxxxx	xxxx	xxxxx	xxxxx	xxxx	xxxxx	xxxxx	xxxx	xxxxx	7.6	xxxx	xxxxx
LOS by Move:	*	*	*	*	*	*	*	*	*	A	*	*
Movement:	LT - LTR - RT			LT - LTR - RT			LT - LTR - RT			LT - LTR - RT		
Shared Cap.:	xxxx	702	xxxxx	xxxx	0	xxxxx	xxxx	xxxx	xxxxx	xxxx	xxxx	xxxxx
SharedQueue:	xxxxx	0.1	xxxxx	xxxxx	xxxx	xxxxx	xxxxx	xxxx	xxxxx	0.0	xxxx	xxxxx
Shrd StpDel:	xxxxx	10.3	xxxxx	xxxxx	xxxx	xxxxx	xxxxx	xxxx	xxxxx	7.6	xxxx	xxxxx
Shared LOS:	*	B	*	*	*	*	*	*	*	A	*	*
ApproachDel:	10.3			xxxxxx			xxxxxx			xxxxxx		
ApproachLOS:	B			*			*			*		

Wilson Creek Estates
Traffic Impact Analysis

Level Of Service Computation Report
2000 HCM Unsignalized Method (Base Volume Alternative)

Intersection #6 Oak Glen Rd & Casa Blance Rd

Average Delay (sec/veh): 1.0 Worst Case Level Of Service: B[10.2]

Approach:	North Bound					South Bound					East Bound					West Bound				
Movement:	L	-	T	-	R	L	-	T	-	R	L	-	T	-	R	L	-	T	-	R
Control:	Stop Sign					Stop Sign					Uncontrolled					Uncontrolled				
Rights:	Include					Include					Include					Include				
Lanes:	1	0	0	0	0	0	0	1!	0	0	0	0	0	1	0	0	1	0	0	0
Volume Module:																				
Base Vol:	30	0	0	0	0	0	0	0	105	63	2	104	0							
Growth Adj:	1.00	1.00	1.00	1.00	1.00	1.00	1.00	1.10	1.00	1.00	1.10	1.00								
Initial Bse:	30	0	0	0	0	0	0	116	63	2	114	0								
User Adj:	1.00	1.00	1.00	1.00	1.00	1.00	1.00	1.00	1.00	1.00	1.00	1.00								
PHF Adj:	1.00	1.00	1.00	1.00	1.00	1.00	1.00	1.00	1.00	1.00	1.00	1.00								
PHF Volume:	30	0	0	0	0	0	0	116	63	2	114	0								
Reduct Vol:	0	0	0	0	0	0	0	0	0	0	0	0								
Final Vol.:	30	0	0	0	0	0	0	116	63	2	114	0								
Critical Gap Module:																				
Critical Gp:	6.4	xxxx	xxxxx	xxxxx	xxxx	xxxxx	xxxxx	xxxx	xxxxx	4.1	xxxx	xxxxx								
FollowUpTim:	3.5	xxxx	xxxxx	xxxxx	xxxx	xxxxx	xxxxx	xxxx	xxxxx	2.2	xxxx	xxxxx								
Capacity Module:																				
Cnflict Vol:	265	xxxx	xxxxx	xxxx	xxxx	xxxxx	xxxx	xxxx	xxxxx	179	xxxx	xxxxx								
Potent Cap.:	728	xxxx	xxxxx	xxxx	xxxx	xxxxx	xxxx	xxxx	xxxxx	1409	xxxx	xxxxx								
Move Cap.:	727	xxxx	xxxxx	xxxx	xxxx	xxxxx	xxxx	xxxx	xxxxx	1409	xxxx	xxxxx								
Volume/Cap:	0.04	xxxx	xxxx	xxxx	xxxx	xxxx	xxxx	xxxx	xxxx	0.00	xxxx	xxxx								
Level Of Service Module:																				
Queue:	0.1	xxxx	xxxxx	xxxxx	xxxx	xxxxx	xxxxx	xxxx	xxxxx	0.0	xxxx	xxxxx								
Stopped Del:	10.2	xxxx	xxxxx	xxxxx	xxxx	xxxxx	xxxxx	xxxx	xxxxx	7.6	xxxx	xxxxx								
LOS by Move:	B	*	*	*	*	*	*	*	*	A	*	*								
Movement:	LT	-	LTR	-	RT	LT	-	LTR	-	RT	LT	-	LTR	-	RT	LT	-	LTR	-	RT
Shared Cap.:	xxxx	xxxx	xxxxx	xxxx	0	xxxxx	xxxx	xxxx	xxxxx	xxxx	xxxx	xxxxx								
SharedQueue:	xxxxx	xxxx	xxxxx	xxxxx	xxxx	xxxxx	xxxxx	xxxx	xxxxx	0.0	xxxx	xxxxx								
Shrd StpDel:	xxxxx	xxxx	xxxxx	xxxxx	xxxx	xxxxx	xxxxx	xxxx	xxxxx	7.6	xxxx	xxxxx								
Shared LOS:	*	*	*	*	*	*	*	*	*	A	*	*								
ApproachDel:	10.2			xxxxxx			xxxxxx			xxxxxx										
ApproachLOS:	B			*			*			*										

Wilson Creek Estates
Traffic Impact Analysis

Level Of Service Computation Report
2000 HCM Unsignalized Method (Base Volume Alternative)

Intersection #7 Oak Glen Rd & Cherry Croft Rd

Average Delay (sec/veh): 0.1 Worst Case Level Of Service: B[10.9]

Approach:	North Bound					South Bound					East Bound					West Bound				
Movement:	L	-	T	-	R	L	-	T	-	R	L	-	T	-	R	L	-	T	-	R
Control:	Stop Sign					Stop Sign					Uncontrolled					Uncontrolled				
Rights:	Include					Include					Include					Include				
Lanes:	0	0	0	0	0	1	0	0	0	0	1	0	1	0	0	0	0	1	0	0
Volume Module:																				
Base Vol:	0	0	0			2	0	0			3	206	0			0	144	0		
Growth Adj:	1.00	1.00	1.00			1.00	1.00	1.00			1.00	1.10	1.00			1.00	1.10	1.00		
Initial Bse:	0	0	0			2	0	0			3	227	0			0	158	0		
User Adj:	1.00	1.00	1.00			1.00	1.00	1.00			1.00	1.00	1.00			1.00	1.00	1.00		
PHF Adj:	1.00	1.00	1.00			1.00	1.00	1.00			1.00	1.00	1.00			1.00	1.00	1.00		
PHF Volume:	0	0	0			2	0	0			3	227	0			0	158	0		
Reduct Vol:	0	0	0			0	0	0			0	0	0			0	0	0		
Final Vol.:	0	0	0			2	0	0			3	227	0			0	158	0		
Critical Gap Module:																				
Critical Gp:	xxxxx	xxxx	xxxxx			6.4	xxxx	xxxxx			4.1	xxxx	xxxxx			xxxxx	xxxx	xxxxx		
FollowUpTim:	xxxxx	xxxx	xxxxx			3.5	xxxx	xxxxx			2.2	xxxx	xxxxx			xxxxx	xxxx	xxxxx		
Capacity Module:																				
Cnflict Vol:	xxxx	xxxx	xxxxx			391	xxxx	xxxxx			158	xxxx	xxxxx			xxxx	xxxx	xxxxx		
Potent Cap.:	xxxx	xxxx	xxxxx			617	xxxx	xxxxx			1433	xxxx	xxxxx			xxxx	xxxx	xxxxx		
Move Cap.:	xxxx	xxxx	xxxxx			616	xxxx	xxxxx			1433	xxxx	xxxxx			xxxx	xxxx	xxxxx		
Volume/Cap:	xxxx	xxxx	xxxx			0.00	xxxx	xxxx			0.00	xxxx	xxxx			xxxx	xxxx	xxxx		
Level Of Service Module:																				
Queue:	xxxxx	xxxx	xxxxx			0.0	xxxx	xxxxx			0.0	xxxx	xxxxx			xxxxx	xxxx	xxxxx		
Stopped Del:	xxxxx	xxxx	xxxxx			10.9	xxxx	xxxxx			7.5	xxxx	xxxxx			xxxxx	xxxx	xxxxx		
LOS by Move:	*	*	*			B	*	*			A	*	*			*	*	*		
Movement:	LT	-	LTR	-	RT	LT	-	LTR	-	RT	LT	-	LTR	-	RT	LT	-	LTR	-	RT
Shared Cap.:	xxxx	xxxx	xxxxx			xxxx	xxxx	xxxxx			xxxx	xxxx	xxxxx			xxxx	xxxx	xxxxx		
SharedQueue:	xxxxx	xxxx	xxxxx			xxxxx	xxxx	xxxxx			xxxxx	xxxx	xxxxx			xxxxx	xxxx	xxxxx		
Shrd StpDel:	xxxxx	xxxx	xxxxx			xxxxx	xxxx	xxxxx			xxxxx	xxxx	xxxxx			xxxxx	xxxx	xxxxx		
Shared LOS:	*	*	*			*	*	*			*	*	*			*	*	*		
ApproachDel:	xxxxxx					10.9					xxxxxx					xxxxxx				
ApproachLOS:	*					B					*					*				

Wilson Creek Estates
Traffic Impact Analysis

Scenario Report

Scenario:	2040 AM
Command:	Default Command
Volume:	2040 AM No Bld
Geometry:	2040 Geo
Impact Fee:	Default Impact Fee
Trip Generation:	AM
Trip Distribution:	Default Trip Distribution
Paths:	Default Paths
Routes:	Default Routes
Configuration:	2040

Wilson Creek Estates
Traffic Impact Analysis

Level Of Service Computation Report
2000 HCM Operations Method (Future Volume Alternative)

Intersection #1 Oak Glen Rd & Bryant St

Cycle (sec): 60 Critical Vol./Cap. (X): 0.693
Loss Time (sec): 4 (Y+R = 4 sec) Average Delay (sec/veh): 19.7
Optimal Cycle: 33 Level Of Service: B

Approach:	North Bound			South Bound			East Bound			West Bound		
Movement:	L - T - R			L - T - R			L - T - R			L - T - R		
Control:	Protected			Protected			Protected			Protected		
Rights:	Include			Include			Include			Include		
Min. Green:	0	0	0	0	0	0	0	0	0	0	0	0
Lanes:	1 0 2 0 1			1 0 2 0 1			1 0 1 0 1			1 0 1 0 1		
Volume Module:												
Base Vol:	274	537	79	46	530	385	175	131	231	67	293	74
Growth Adj:	1.00	1.00	1.00	1.00	1.00	1.00	1.00	1.10	1.00	1.00	1.10	1.00
Initial Bse:	274	537	79	46	530	385	175	144	231	67	322	74
Added Vol:	0	1	15	0	4	5	2	14	0	45	41	0
PasserByVol:	0	0	0	0	0	0	0	0	0	0	0	0
Initial Fut:	274	538	94	46	534	390	177	158	231	112	363	74
User Adj:	1.00	1.00	1.00	1.00	1.00	1.00	1.00	1.00	1.00	1.00	1.00	1.00
PHF Adj:	1.00	1.00	1.00	1.00	1.00	1.00	1.00	1.00	1.00	1.00	1.00	1.00
PHF Volume:	274	538	94	46	534	390	177	158	231	112	363	74
Reduct Vol:	0	0	0	0	0	0	0	0	0	0	0	0
Reduced Vol:	274	538	94	46	534	390	177	158	231	112	363	74
PCE Adj:	1.00	1.00	1.00	1.00	1.00	1.00	1.00	1.00	1.00	1.00	1.00	1.00
MLF Adj:	1.00	1.00	1.00	1.00	1.00	1.00	1.00	1.00	1.00	1.00	1.00	1.00
Final Vol.:	274	538	94	46	534	390	177	158	231	112	363	74
Saturation Flow Module:												
Sat/Lane:	1900	1900	1900	1900	1900	1900	1900	1900	1900	1900	1900	1900
Adjustment:	0.95	0.95	1.00	0.95	0.95	1.00	0.95	1.00	1.00	0.95	1.00	1.00
Lanes:	1.00	2.00	1.00	1.00	2.00	1.00	1.00	1.00	1.00	1.00	1.00	1.00
Final Sat.:	1805	3610	1900	1805	3610	1900	1805	1900	1900	1805	1900	1900
Capacity Analysis Module:												
Vol/Sat:	0.15	0.15	0.05	0.03	0.15	0.21	0.10	0.08	0.12	0.06	0.19	0.04
Crit Moves:	****					****	****				****	
Green/Cycle:	0.22	0.44	0.44	0.08	0.30	0.30	0.14	0.28	0.28	0.14	0.28	0.28
Volume/Cap:	0.69	0.34	0.11	0.34	0.50	0.69	0.69	0.30	0.44	0.44	0.69	0.14
Delay/Veh:	26.8	11.2	9.9	27.8	17.8	22.4	32.4	17.4	18.5	24.8	23.4	16.5
User DelAdj:	1.00	1.00	1.00	1.00	1.00	1.00	1.00	1.00	1.00	1.00	1.00	1.00
AdjDel/Veh:	26.8	11.2	9.9	27.8	17.8	22.4	32.4	17.4	18.5	24.8	23.4	16.5
HCM2kAvg:	6	3	1	1	5	8	5	3	4	2	7	1

Wilson Creek Estates
Traffic Impact Analysis

Level Of Service Computation Report
2000 HCM Unsignalized Method (Future Volume Alternative)

Intersection #5 Oak Glen Rd & Pendleton Rd

Average Delay (sec/veh): 2.6 Worst Case Level Of Service: B[11.9]

Approach:	North Bound						South Bound						East Bound						West Bound					
Movement:	L	-	T	-	R		L	-	T	-	R		L	-	T	-	R		L	-	T	-	R	
Control:	Stop Sign						Stop Sign						Uncontrolled						Uncontrolled					
Rights:	Include						Include						Include						Include					
Lanes:	0	0	1!	0	0		0	0	1!	0	0		0	0	1!	0	0		0	0	0	1	0	
Volume Module:																								
Base Vol:	33	0	5	0	0	0	0	77	13	0	176	0												
Growth Adj:	1.00	1.00	1.00	1.00	1.00	1.00	1.00	1.10	1.00	1.00	1.10	1.00												
Initial Bse:	33	0	5	0	0	0	0	85	13	0	194	0												
Added Vol:	0	1	0	1	3	52	18	10	0	0	30	2												
PasserByVol:	0	0	0	0	0	0	0	0	0	0	0	0												
Initial Fut:	33	1	5	1	3	52	18	95	13	0	224	2												
User Adj:	1.00	1.00	1.00	1.00	1.00	1.00	1.00	1.00	1.00	1.00	1.00	1.00												
PHF Adj:	1.00	1.00	1.00	1.00	1.00	1.00	1.00	1.00	1.00	1.00	1.00	1.00												
PHF Volume:	33	1	5	1	3	52	18	95	13	0	224	2												
Reduct Vol:	0	0	0	0	0	0	0	0	0	0	0	0												
Final Vol.:	33	1	5	1	3	52	18	95	13	0	224	2												
Critical Gap Module:																								
Critical Gp:	7.1	6.5	6.2	7.1	6.5	6.2	4.1	xxxx	xxxxx	xxxxx	xxxx	xxxxx												
FollowUpTim:	3.5	4.0	3.3	3.5	4.0	3.3	2.2	xxxx	xxxxx	xxxxx	xxxx	xxxxx												
Capacity Module:																								
Cnflict Vol:	389	363	101	365	368	225	226	xxxx	xxxxx	xxxx	xxxx	xxxxx												
Potent Cap.:	573	568	960	595	564	820	1355	xxxx	xxxxx	xxxx	xxxx	xxxxx												
Move Cap.:	529	560	960	585	556	820	1355	xxxx	xxxxx	xxxx	xxxx	xxxxx												
Volume/Cap:	0.06	0.00	0.01	0.00	0.01	0.06	0.01	xxxx	xxxx	xxxx	xxxx	xxxx												
Level Of Service Module:																								
Queue:	xxxxx	xxxx	xxxxx	xxxxx	xxxx	xxxxx	0.0	xxxx	xxxxx	xxxxx	xxxx	xxxxx												
Stopped Del:	xxxxx	xxxx	xxxxx	xxxxx	xxxx	xxxxx	7.7	xxxx	xxxxx	xxxxx	xxxx	xxxxx												
LOS by Move:	*	*	*	*	*	*	A	*	*	*	*	*												
Movement:	LT	-	LTR	-	RT		LT	-	LTR	-	RT		LT	-	LTR	-	RT		LT	-	LTR	-	RT	
Shared Cap.:	xxxx	562	xxxxx	xxxx	794	xxxxx	xxxx	xxxx	xxxxx	xxxx	xxxx	xxxxx												
SharedQueue:	xxxxx	0.2	xxxxx	xxxxx	0.2	xxxxx	xxxxx	xxxx	xxxxx	xxxxx	xxxx	xxxxx												
Shrd StpDel:	xxxxx	11.9	xxxxx	xxxxx	9.9	xxxxx	xxxxx	xxxx	xxxxx	xxxxx	xxxx	xxxxx												
Shared LOS:	*	B	*	*	A	*	*	*	*	*	*	*												
ApproachDel:	11.9				9.9		xxxxxx				xxxxxx													
ApproachLOS:	B				A		*				*													

Wilson Creek Estates
Traffic Impact Analysis

Level Of Service Computation Report
2000 HCM Unsignalized Method (Future Volume Alternative)

Intersection #6 Oak Glen Rd & Casa Blance Rd

Average Delay (sec/veh): 2.3 Worst Case Level Of Service: B[10.6]

Approach:	North Bound					South Bound					East Bound					West Bound				
Movement:	L	-	T	-	R	L	-	T	-	R	L	-	T	-	R	L	-	T	-	R
Control:	Stop Sign					Stop Sign					Uncontrolled					Uncontrolled				
Rights:	Include					Include					Include					Include				
Lanes:	1	0	0	0	0	0	0	0	0	1	0	0	1!	0	0	0	0	1	0	0
Volume Module:																				
Base Vol:	56	0	0	0	0	0	0	0	0	0	0	66	15	0	0	0	119	0		
Growth Adj:	1.00	1.00	1.00	1.00	1.00	1.00	1.00	1.00	1.00	1.00	1.10	1.00	1.00	1.00	1.00	1.10	1.00			
Initial Bse:	56	0	0	0	0	0	0	0	0	0	73	15	0	0	0	131	0			
Added Vol:	0	0	0	0	0	12	4	7	0	0	20	0								
PasserByVol:	0	0	0	0	0	0	0	0	0	0	0	0								
Initial Fut:	56	0	0	0	0	12	4	80	15	0	151	0								
User Adj:	1.00	1.00	1.00	1.00	1.00	1.00	1.00	1.00	1.00	1.00	1.00	1.00								
PHF Adj:	1.00	1.00	1.00	1.00	1.00	1.00	1.00	1.00	1.00	1.00	1.00	1.00								
PHF Volume:	56	0	0	0	0	12	4	80	15	0	151	0								
Reduct Vol:	0	0	0	0	0	0	0	0	0	0	0	0								
Final Vol.:	56	0	0	0	0	12	4	80	15	0	151	0								
Critical Gap Module:																				
Critical Gp:	7.1	xxxx	xxxxx	xxxxx	xxxx	6.2	4.1	xxxx	xxxxx	xxxxx	xxxx	xxxxx								
FollowUpTim:	3.5	xxxx	xxxxx	xxxxx	xxxx	3.3	2.2	xxxx	xxxxx	xxxxx	xxxx	xxxxx								
Capacity Module:																				
Cnflict Vol:	252	xxxx	xxxxx	xxxx	xxxx	151	151	xxxx	xxxxx	xxxx	xxxx	xxxxx								
Potent Cap.:	706	xxxx	xxxxx	xxxx	xxxx	901	1442	xxxx	xxxxx	xxxx	xxxx	xxxxx								
Move Cap.:	695	xxxx	xxxxx	xxxx	xxxx	901	1442	xxxx	xxxxx	xxxx	xxxx	xxxxx								
Volume/Cap:	0.08	xxxx	xxxx	xxxx	xxxx	0.01	0.00	xxxx	xxxx	xxxx	xxxx	xxxx								
Level Of Service Module:																				
Queue:	0.3	xxxx	xxxxx	xxxxx	xxxx	0.0	0.0	xxxx	xxxxx	xxxxx	xxxx	xxxxx								
Stopped Del:	10.6	xxxx	xxxxx	xxxxx	xxxx	9.1	7.5	xxxx	xxxxx	xxxxx	xxxx	xxxxx								
LOS by Move:	B	*	*	*	*	A	A	*	*	*	*	*								
Movement:	LT	-	LTR	-	RT	LT	-	LTR	-	RT	LT	-	LTR	-	RT	LT	-	LTR	-	RT
Shared Cap.:	xxxx	xxxx	xxxxx	xxxx	xxxx	xxxxx	xxxx	xxxx	xxxxx	xxxx	xxxx	xxxxx								
SharedQueue:	xxxxx	xxxx	xxxxx	xxxxx	xxxx	xxxxx	xxxxx	xxxx	xxxxx	xxxxx	xxxx	xxxxx								
Shrd StpDel:	xxxxx	xxxx	xxxxx	xxxxx	xxxx	xxxxx	xxxxx	xxxx	xxxxx	xxxxx	xxxx	xxxxx								
Shared LOS:	*	*	*	*	*	*	*	*	*	*	*	*								
ApproachDel:	10.6					9.1					xxxxxx					xxxxxx				
ApproachLOS:	B					A					*					*				

Wilson Creek Estates
Traffic Impact Analysis

Level Of Service Computation Report
2000 HCM Unsignalized Method (Future Volume Alternative)

Intersection #7 Oak Glen Rd & Cherry Croft Rd

Average Delay (sec/veh): 0.1 Worst Case Level Of Service: B[10.0]

Approach:	North Bound					South Bound					East Bound					West Bound				
Movement:	L	-	T	-	R	L	-	T	-	R	L	-	T	-	R	L	-	T	-	R
Control:	Stop Sign					Stop Sign					Uncontrolled					Uncontrolled				
Rights:	Include					Include					Include					Include				
Lanes:	0	0	0	0	0	0	0	0	0	1	1	0	1	0	0	0	0	1	0	0
Volume Module:																				
Base Vol:	0	0	0	0	0	0	2	0	90	0	0	216	0							
Growth Adj:	1.00	1.00	1.00	1.00	1.00	1.00	1.00	1.10	1.00	1.00	1.10	1.00								
Initial Bse:	0	0	0	0	0	2	0	99	0	0	238	0								
Added Vol:	0	0	0	0	0	3	1	28	0	0	83	0								
PasserByVol:	0	0	0	0	0	0	0	0	0	0	0	0								
Initial Fut:	0	0	0	0	0	5	1	127	0	0	321	0								
User Adj:	1.00	1.00	1.00	1.00	1.00	1.00	1.00	1.00	1.00	1.00	1.00	1.00								
PHF Adj:	1.00	1.00	1.00	1.00	1.00	1.00	1.00	1.00	1.00	1.00	1.00	1.00								
PHF Volume:	0	0	0	0	0	5	1	127	0	0	321	0								
Reduct Vol:	0	0	0	0	0	0	0	0	0	0	0	0								
Final Vol.:	0	0	0	0	0	5	1	127	0	0	321	0								
Critical Gap Module:																				
Critical Gp:	xxxxx	xxxx	xxxxx	xxxxx	xxxx	6.2	4.1	xxxx	xxxxx	xxxxx	xxxx	xxxxx								
FollowUpTim:	xxxxx	xxxx	xxxxx	xxxxx	xxxx	3.3	2.2	xxxx	xxxxx	xxxxx	xxxx	xxxxx								
Capacity Module:																				
Cnflict Vol:	xxxx	xxxx	xxxxx	xxxx	xxxx	321	321	xxxx	xxxxx	xxxx	xxxx	xxxxx								
Potent Cap.:	xxxx	xxxx	xxxxx	xxxx	xxxx	725	1251	xxxx	xxxxx	xxxx	xxxx	xxxxx								
Move Cap.:	xxxx	xxxx	xxxxx	xxxx	xxxx	725	1251	xxxx	xxxxx	xxxx	xxxx	xxxxx								
Volume/Cap:	xxxx	xxxx	xxxx	xxxx	xxxx	0.01	0.00	xxxx	xxxx	xxxx	xxxx	xxxx								
Level Of Service Module:																				
Queue:	xxxxx	xxxx	xxxxx	xxxxx	xxxx	0.0	0.0	xxxx	xxxxx	xxxxx	xxxx	xxxxx								
Stopped Del:	xxxxx	xxxx	xxxxx	xxxxx	xxxx	10.0	7.9	xxxx	xxxxx	xxxxx	xxxx	xxxxx								
LOS by Move:	*	*	*	*	*	B	A	*	*	*	*	*								
Movement:	LT	-	LTR	-	RT	LT	-	LTR	-	RT	LT	-	LTR	-	RT	LT	-	LTR	-	RT
Shared Cap.:	xxxx	xxxx	xxxxx	xxxx	xxxx	xxxxx	xxxx	xxxx	xxxxx	xxxx	xxxx	xxxxx								
SharedQueue:	xxxxx	xxxx	xxxxx	xxxxx	xxxx	xxxxx	xxxxx	xxxx	xxxxx	xxxxx	xxxx	xxxxx								
Shrd StpDel:	xxxxx	xxxx	xxxxx	xxxxx	xxxx	xxxxx	xxxxx	xxxx	xxxxx	xxxxx	xxxx	xxxxx								
Shared LOS:	*	*	*	*	*	*	*	*	*	*	*	*								
ApproachDel:	xxxxxx					10.0			xxxxxx				xxxxxx							
ApproachLOS:	*					B			*				*							

Wilson Creek Estates
Traffic Impact Analysis

Level Of Service Computation Report
2000 HCM Unsignalized Method (Future Volume Alternative)

Intersection #11 Oak Glen Rd & O St

Average Delay (sec/veh): 1.0 Worst Case Level Of Service: A[9.0]

Approach:	North Bound				South Bound				East Bound				West Bound			
Movement:	L	- T	- R		L	- T	- R		L	- T	- R		L	- T	- R	
Control:	Stop Sign				Stop Sign				Uncontrolled				Uncontrolled			
Rights:	Include				Include				Include				Include			
Lanes:	0	0	1!	0 0	0	0	0	0 1	0	1	0	0 0	0	0	1	0 0
Volume Module:																
Base Vol:	0	0	0	0	0	0	0	0	0	66	0	0	0	119	0	
Growth Adj:	1.00	1.00	1.00	1.00	1.00	1.00	1.00	1.00	1.10	1.00	1.00	1.10	1.00			
Initial Bse:	0	0	0	0	0	0	0	0	73	0	0	131	0			
Added Vol:	0	0	0	0	0	20	7	0	0	0	0	0				
PasserByVol:	0	0	0	0	0	0	0	0	0	0	0	0				
Initial Fut:	0	0	0	0	0	20	7	73	0	0	131	0				
User Adj:	1.00	1.00	1.00	1.00	1.00	1.00	1.00	1.00	1.00	1.00	1.00	1.00				
PHF Adj:	1.00	1.00	1.00	1.00	1.00	1.00	1.00	1.00	1.00	1.00	1.00	1.00				
PHF Volume:	0	0	0	0	0	20	7	73	0	0	131	0				
Reduct Vol:	0	0	0	0	0	0	0	0	0	0	0	0				
Final Vol.:	0	0	0	0	0	20	7	73	0	0	131	0				
Critical Gap Module:																
Critical Gp:	xxxxx	xxxx	xxxxx	xxxxx	xxxx	6.2	4.1	xxxx	xxxxx	xxxxx	xxxx	xxxxx				
FollowUpTim:	xxxxx	xxxx	xxxxx	xxxxx	xxxx	3.3	2.2	xxxx	xxxxx	xxxxx	xxxx	xxxxx				
Capacity Module:																
Cnflict Vol:	xxxx	xxxx	xxxxx	xxxx	xxxx	131	131	xxxx	xxxxx	xxxx	xxxx	xxxxx				
Potent Cap.:	xxxx	xxxx	xxxxx	xxxx	xxxx	924	1467	xxxx	xxxxx	xxxx	xxxx	xxxxx				
Move Cap.:	xxxx	xxxx	xxxxx	xxxx	xxxx	924	1467	xxxx	xxxxx	xxxx	xxxx	xxxxx				
Volume/Cap:	xxxx	xxxx	xxxx	xxxx	xxxx	0.02	0.00	xxxx	xxxx	xxxx	xxxx	xxxx				
Level Of Service Module:																
Queue:	xxxxx	xxxx	xxxxx	xxxxx	xxxx	0.1	0.0	xxxx	xxxxx	xxxxx	xxxx	xxxxx				
Stopped Del:	xxxxx	xxxx	xxxxx	xxxxx	xxxx	9.0	7.5	xxxx	xxxxx	xxxxx	xxxx	xxxxx				
LOS by Move:	*	*	*	*	*	A	A	*	*	*	*	*				
Movement:	LT -	LTR -	RT	LT -	LTR -	RT	LT -	LTR -	RT	LT -	LTR -	RT				
Shared Cap.:	xxxx	0	xxxxx	xxxx	xxxx	xxxxx	xxxx	xxxx	xxxxx	xxxx	xxxx	xxxxx				
SharedQueue:	xxxxx	xxxx	xxxxx	xxxxx	xxxx	xxxxx	0.0	xxxx	xxxxx	xxxxx	xxxx	xxxxx				
Shrd StpDel:	xxxxx	xxxx	xxxxx	xxxxx	xxxx	xxxxx	7.5	xxxx	xxxxx	xxxxx	xxxx	xxxxx				
Shared LOS:	*	*	*	*	*	*	A	*	*	*	*	*				
ApproachDel:	xxxxxx			9.0			xxxxxx			xxxxxx						
ApproachLOS:	*			A			*			*						

Wilson Creek Estates
Traffic Impact Analysis

Scenario Report

Scenario:	2040 PM
Command:	Default Command
Volume:	2040 PM No Bld
Geometry:	2040 Geo
Impact Fee:	Default Impact Fee
Trip Generation:	PM
Trip Distribution:	Default Trip Distribution
Paths:	Default Paths
Routes:	Default Routes
Configuration:	2040

Wilson Creek Estates
Traffic Impact Analysis

Level Of Service Computation Report
2000 HCM Operations Method (Future Volume Alternative)

Intersection #1 Oak Glen Rd & Bryant St

Cycle (sec): 60 Critical Vol./Cap. (X): 0.425
Loss Time (sec): 4 (Y+R = 4 sec) Average Delay (sec/veh): 18.3
Optimal Cycle: 19 Level Of Service: B

Approach:	North Bound			South Bound			East Bound			West Bound		
Movement:	L - T - R			L - T - R			L - T - R			L - T - R		
Control:	Protected			Protected			Protected			Protected		
Rights:	Include			Include			Include			Include		
Min. Green:	0	0	0	0	0	0	0	0	0	0	0	0
Lanes:	1 0 2 0 1			1 0 2 0 1			1 0 1 0 1			1 0 1 0 1		
Volume Module:												
Base Vol:	151	305	71	61	392	172	237	148	194	71	94	96
Growth Adj:	1.00	1.00	1.00	1.00	1.00	1.00	1.00	1.10	1.00	1.00	1.10	1.00
Initial Bse:	151	305	71	61	392	172	237	163	194	71	103	96
Added Vol:	0	4	50	0	3	4	6	46	0	30	28	0
PasserByVol:	0	0	0	0	0	0	0	0	0	0	0	0
Initial Fut:	151	309	121	61	395	176	243	209	194	101	131	96
User Adj:	1.00	1.00	1.00	1.00	1.00	1.00	1.00	1.00	1.00	1.00	1.00	1.00
PHF Adj:	1.00	1.00	1.00	1.00	1.00	1.00	1.00	1.00	1.00	1.00	1.00	1.00
PHF Volume:	151	309	121	61	395	176	243	209	194	101	131	96
Reduct Vol:	0	0	0	0	0	0	0	0	0	0	0	0
Reduced Vol:	151	309	121	61	395	176	243	209	194	101	131	96
PCE Adj:	1.00	1.00	1.00	1.00	1.00	1.00	1.00	1.00	1.00	1.00	1.00	1.00
MLF Adj:	1.00	1.00	1.00	1.00	1.00	1.00	1.00	1.00	1.00	1.00	1.00	1.00
Final Vol.:	151	309	121	61	395	176	243	209	194	101	131	96
Saturation Flow Module:												
Sat/Lane:	1900	1900	1900	1900	1900	1900	1900	1900	1900	1900	1900	1900
Adjustment:	0.95	0.95	1.00	0.95	0.95	1.00	0.95	1.00	1.00	0.95	1.00	1.00
Lanes:	1.00	2.00	1.00	1.00	2.00	1.00	1.00	1.00	1.00	1.00	1.00	1.00
Final Sat.:	1805	3610	1900	1805	3610	1900	1805	1900	1900	1805	1900	1900
Capacity Analysis Module:												
Vol/Sat:	0.08	0.09	0.06	0.03	0.11	0.09	0.13	0.11	0.10	0.06	0.07	0.05
Crit Moves:	****				****		****				****	
Green/Cycle:	0.20	0.33	0.33	0.13	0.26	0.26	0.32	0.32	0.32	0.16	0.16	0.16
Volume/Cap:	0.43	0.26	0.20	0.26	0.43	0.36	0.43	0.35	0.32	0.35	0.43	0.31
Delay/Veh:	21.9	15.0	14.7	24.2	18.9	18.7	16.7	16.0	15.9	23.0	23.5	22.7
User DelAdj:	1.00	1.00	1.00	1.00	1.00	1.00	1.00	1.00	1.00	1.00	1.00	1.00
AdjDel/Veh:	21.9	15.0	14.7	24.2	18.9	18.7	16.7	16.0	15.9	23.0	23.5	22.7
HCM2kAvg:	3	2	2	1	3	3	4	3	3	2	3	2

Wilson Creek Estates
Traffic Impact Analysis

Level Of Service Computation Report
2000 HCM Unsignalized Method (Future Volume Alternative)

Intersection #5 Oak Glen Rd & Pendleton Rd

Average Delay (sec/veh): 2.1 Worst Case Level Of Service: B[12.8]

Approach:	North Bound						South Bound						East Bound						West Bound					
Movement:	L	-	T	-	R		L	-	T	-	R		L	-	T	-	R		L	-	T	-	R	
Control:	Stop Sign						Stop Sign						Uncontrolled						Uncontrolled					
Rights:	Include						Include						Include						Include					
Lanes:	0	0	1!	0	0		0	0	1!	0	0		0	0	1!	0	0		0	0	1!	0	0	
Volume Module:																								
Base Vol:	12		0		4		0		0		0		0		159		29		2		131		0	
Growth Adj:	1.00	1.00	1.00	1.00	1.00	1.00	1.00	1.10	1.00	1.00	1.10	1.00												
Initial Bse:	12		0		4		0		0		0		0		175		29		2		144		0	
Added Vol:	0		3		0		2		2		36		59		34		0		0		20		1	
PasserByVol:	0		0		0		0		0		0		0		0		0		0		0		0	
Initial Fut:	12		3		4		2		2		36		59		209		29		2		164		1	
User Adj:	1.00	1.00	1.00	1.00	1.00	1.00	1.00	1.00	1.00	1.00	1.00	1.00												
PHF Adj:	1.00	1.00	1.00	1.00	1.00	1.00	1.00	1.00	1.00	1.00	1.00	1.00												
PHF Volume:	12		3		4		2		2		36		59		209		29		2		164		1	
Reduct Vol:	0		0		0		0		0		0		0		0		0		0		0		0	
Final Vol.:	12		3		4		2		2		36		59		209		29		2		164		1	
Critical Gap Module:																								
Critical Gp:	7.1	6.5	6.2	7.1	6.5	6.2	4.1	xxxx	xxxxx	4.1	xxxx	xxxxx												
FollowUpTim:	3.5	4.0	3.3	3.5	4.0	3.3	2.2	xxxx	xxxxx	2.2	xxxx	xxxxx												
Capacity Module:																								
Cnflict Vol:	529	511	223	514	525	165	165	xxxx	xxxxx	238	xxxx	xxxxx												
Potent Cap.:	463	469	821	475	461	885	1425	xxxx	xxxxx	1341	xxxx	xxxxx												
Move Cap.:	428	448	821	454	440	885	1425	xxxx	xxxxx	1341	xxxx	xxxxx												
Volume/Cap:	0.03	0.01	0.00	0.00	0.00	0.04	0.04	xxxx	xxxx	0.00	xxxx	xxxx												
Level Of Service Module:																								
Queue:	xxxxx	xxxx	xxxxx	xxxxx	xxxx	xxxxx	0.1	xxxx	xxxxx	0.0	xxxx	xxxxx												
Stopped Del:	xxxxx	xxxx	xxxxx	xxxxx	xxxx	xxxxx	7.6	xxxx	xxxxx	7.7	xxxx	xxxxx												
LOS by Move:	*	*	*	*	*	*	A	*	*	A	*	*												
Movement:	LT -	LTR -	RT	LT -	LTR -	RT	LT -	LTR -	RT	LT -	LTR -	RT												
Shared Cap.:	xxxx	480	xxxxx	xxxx	806	xxxxx	xxxx	xxxx	xxxxx	xxxx	xxxx	xxxxx												
SharedQueue:	xxxxx	0.1	xxxxx	xxxxx	0.2	xxxxx	xxxxx	xxxx	xxxxx	xxxxx	xxxx	xxxxx												
Shrd StpDel:	xxxxx	12.8	xxxxx	xxxxx	9.7	xxxxx	xxxxx	xxxx	xxxxx	xxxxx	xxxx	xxxxx												
Shared LOS:	*	B	*	*	A	*	*	*	*	*	*	*												
ApproachDel:	12.8			9.7			xxxxxx			xxxxxx														
ApproachLOS:	B			A			*			*														

Wilson Creek Estates
Traffic Impact Analysis

Level Of Service Computation Report
2000 HCM Unsignalized Method (Future Volume Alternative)

Intersection #6 Oak Glen Rd & Casa Blance Rd

Average Delay (sec/veh): 1.4 Worst Case Level Of Service: B[11.1]

Approach:	North Bound					South Bound					East Bound					West Bound				
Movement:	L	-	T	-	R	L	-	T	-	R	L	-	T	-	R	L	-	T	-	R
Control:	Stop Sign					Stop Sign					Uncontrolled					Uncontrolled				
Rights:	Include					Include					Include					Include				
Lanes:	1	0	0	0	0	0	0	0	0	1	0	0	1!	0	0	0	1	0	0	0
Volume Module:																				
Base Vol:	30	0	0	0	0	0	0	105	63	2	104	0								
Growth Adj:	1.00	1.00	1.00	1.00	1.00	1.00	1.00	1.10	1.00	1.00	1.10	1.00								
Initial Bse:	30	0	0	0	0	0	0	116	63	2	114	0								
Added Vol:	0	0	0	0	0	8	13	23	0	0	13	0								
PasserByVol:	0	0	0	0	0	0	0	0	0	0	0	0								
Initial Fut:	30	0	0	0	0	8	13	139	63	2	127	0								
User Adj:	1.00	1.00	1.00	1.00	1.00	1.00	1.00	1.00	1.00	1.00	1.00	1.00								
PHF Adj:	1.00	1.00	1.00	1.00	1.00	1.00	1.00	1.00	1.00	1.00	1.00	1.00								
PHF Volume:	30	0	0	0	0	8	13	139	63	2	127	0								
Reduct Vol:	0	0	0	0	0	0	0	0	0	0	0	0								
Final Vol.:	30	0	0	0	0	8	13	139	63	2	127	0								
Critical Gap Module:																				
Critical Gp:	7.1	xxxx	xxxxx	xxxxx	xxxx	6.2	4.1	xxxx	xxxxx	4.1	xxxx	xxxxx								
FollowUpTim:	3.5	xxxx	xxxxx	xxxxx	xxxx	3.3	2.2	xxxx	xxxxx	2.2	xxxx	xxxxx								
Capacity Module:																				
Cnflict Vol:	331	xxxx	xxxxx	xxxx	xxxx	127	127	xxxx	xxxxx	202	xxxx	xxxxx								
Potent Cap.:	626	xxxx	xxxxx	xxxx	xxxx	928	1471	xxxx	xxxxx	1383	xxxx	xxxxx								
Move Cap.:	616	xxxx	xxxxx	xxxx	xxxx	928	1471	xxxx	xxxxx	1383	xxxx	xxxxx								
Volume/Cap:	0.05	xxxx	xxxx	xxxx	xxxx	0.01	0.01	xxxx	xxxx	0.00	xxxx	xxxx								
Level Of Service Module:																				
Queue:	0.2	xxxx	xxxxx	xxxxx	xxxx	0.0	0.0	xxxx	xxxxx	0.0	xxxx	xxxxx								
Stopped Del:	11.1	xxxx	xxxxx	xxxxx	xxxx	8.9	7.5	xxxx	xxxxx	7.6	xxxx	xxxxx								
LOS by Move:	B	*	*	*	*	A	A	*	*	A	*	*								
Movement:	LT	-	LTR	-	RT	LT	-	LTR	-	RT	LT	-	LTR	-	RT	LT	-	LTR	-	RT
Shared Cap.:	xxxx	xxxx	xxxxx	xxxx	xxxx	xxxxx	xxxx	xxxx	xxxxx	xxxx	xxxx	xxxxx								
SharedQueue:	xxxxx	xxxx	xxxxx	xxxxx	xxxx	xxxxx	xxxxx	xxxx	xxxxx	0.0	xxxx	xxxxx								
Shrd StpDel:	xxxxx	xxxx	xxxxx	xxxxx	xxxx	xxxxx	xxxxx	xxxx	xxxxx	7.6	xxxx	xxxxx								
Shared LOS:	*	*	*	*	*	*	*	*	*	A	*	*								
ApproachDel:	11.1					8.9				xxxxxx			xxxxxx							
ApproachLOS:	B					A				*			*							

Wilson Creek Estates
Traffic Impact Analysis

Level Of Service Computation Report
2000 HCM Unsignalized Method (Future Volume Alternative)

Intersection #7 Oak Glen Rd & Cherry Croft Rd

Average Delay (sec/veh): 0.2 Worst Case Level Of Service: B[10.8]

Approach:	North Bound					South Bound					East Bound					West Bound				
Movement:	L	-	T	-	R	L	-	T	-	R	L	-	T	-	R	L	-	T	-	R
Control:	Stop Sign					Stop Sign					Uncontrolled					Uncontrolled				
Rights:	Include					Include					Include					Include				
Lanes:	0	0	0	0	0	0	0	1!	0	0	1	0	1	0	0	0	0	1	0	0
Volume Module:																				
Base Vol:	0	0	0	2	0	0	3	206	0	0	144	0								
Growth Adj:	1.00	1.00	1.00	1.00	1.00	1.00	1.00	1.10	1.00	1.00	1.10	1.00								
Initial Bse:	0	0	0	2	0	0	3	227	0	0	158	0								
Added Vol:	0	0	0	0	0	2	3	93	0	0	56	0								
PasserByVol:	0	0	0	0	0	0	0	0	0	0	0	0								
Initial Fut:	0	0	0	2	0	2	6	320	0	0	214	0								
User Adj:	1.00	1.00	1.00	1.00	1.00	1.00	1.00	1.00	1.00	1.00	1.00	1.00								
PHF Adj:	1.00	1.00	1.00	1.00	1.00	1.00	1.00	1.00	1.00	1.00	1.00	1.00								
PHF Volume:	0	0	0	2	0	2	6	320	0	0	214	0								
Reduct Vol:	0	0	0	0	0	0	0	0	0	0	0	0								
Final Vol.:	0	0	0	2	0	2	6	320	0	0	214	0								
Critical Gap Module:																				
Critical Gp:	xxxxx	xxxx	xxxxx	6.4	xxxx	6.2	4.1	xxxx	xxxxx	xxxxx	xxxx	xxxxx								
FollowUpTim:	xxxxx	xxxx	xxxxx	3.5	xxxx	3.3	2.2	xxxx	xxxxx	xxxxx	xxxx	xxxxx								
Capacity Module:																				
Cnflict Vol:	xxxx	xxxx	xxxxx	546	xxxx	214	214	xxxx	xxxxx	xxxx	xxxx	xxxxx								
Potent Cap.:	xxxx	xxxx	xxxxx	502	xxxx	831	1368	xxxx	xxxxx	xxxx	xxxx	xxxxx								
Move Cap.:	xxxx	xxxx	xxxxx	501	xxxx	831	1368	xxxx	xxxxx	xxxx	xxxx	xxxxx								
Volume/Cap:	xxxx	xxxx	xxxx	0.00	xxxx	0.00	0.00	xxxx	xxxx	xxxx	xxxx	xxxx								
Level Of Service Module:																				
Queue:	xxxxx	xxxx	xxxxx	xxxxx	xxxx	xxxxx	0.0	xxxx	xxxxx	xxxxx	xxxx	xxxxx								
Stopped Del:	xxxxx	xxxx	xxxxx	xxxxx	xxxx	xxxxx	7.6	xxxx	xxxxx	xxxxx	xxxx	xxxxx								
LOS by Move:	*	*	*	*	*	*	A	*	*	*	*	*								
Movement:	LT	-	LTR	-	RT	LT	-	LTR	-	RT	LT	-	LTR	-	RT	LT	-	LTR	-	RT
Shared Cap.:	xxxx	xxxx	xxxxx	xxxx	625	xxxxx	xxxx	xxxx	xxxxx	xxxx	xxxx	xxxxx								
SharedQueue:	xxxxx	xxxx	xxxxx	xxxxx	0.0	xxxxx	xxxxx	xxxx	xxxxx	xxxxx	xxxx	xxxxx								
Shrd StpDel:	xxxxx	xxxx	xxxxx	xxxxx	10.8	xxxxx	xxxxx	xxxx	xxxxx	xxxxx	xxxx	xxxxx								
Shared LOS:	*	*	*	*	B	*	*	*	*	*	*	*								
ApproachDel:	xxxxxx				10.8		xxxxxx				xxxxxx									
ApproachLOS:	*				B		*				*									

Wilson Creek Estates
Traffic Impact Analysis

Level Of Service Computation Report
2000 HCM Unsignalized Method (Future Volume Alternative)

Intersection #11 Oak Glen Rd & O St

Average Delay (sec/veh): 1.1 Worst Case Level Of Service: A[8.9]

Approach:	North Bound				South Bound				East Bound				West Bound			
Movement:	L	- T	- R		L	- T	- R		L	- T	- R		L	- T	- R	
Control:	Stop Sign				Stop Sign				Uncontrolled				Uncontrolled			
Rights:	Include				Include				Include				Include			
Lanes:	0	0	1!	0 0	0	0	0	0 1	0	1	0	0 0	0	0	1	0 0
Volume Module:																
Base Vol:	0	0	0	0	0	0	0	0	0	105	0	0	0	106	0	
Growth Adj:	1.00	1.00	1.00	1.00	1.00	1.00	1.00	1.00	1.10	1.00	1.00	1.10	1.00			
Initial Bse:	0	0	0	0	0	0	0	0	116	0	0	117	0			
Added Vol:	0	0	0	0	0	13	23	0	0	0	0	0				
PasserByVol:	0	0	0	0	0	0	0	0	0	0	0	0				
Initial Fut:	0	0	0	0	0	13	23	116	0	0	117	0				
User Adj:	1.00	1.00	1.00	1.00	1.00	1.00	1.00	1.00	1.00	1.00	1.00	1.00				
PHF Adj:	1.00	1.00	1.00	1.00	1.00	1.00	1.00	1.00	1.00	1.00	1.00	1.00				
PHF Volume:	0	0	0	0	0	13	23	116	0	0	117	0				
Reduct Vol:	0	0	0	0	0	0	0	0	0	0	0	0				
Final Vol.:	0	0	0	0	0	13	23	116	0	0	117	0				
Critical Gap Module:																
Critical Gp:	xxxxx	xxxx	xxxxx	xxxxx	xxxx	6.2	4.1	xxxx	xxxxx	xxxxx	xxxx	xxxxx				
FollowUpTim:	xxxxx	xxxx	xxxxx	xxxxx	xxxx	3.3	2.2	xxxx	xxxxx	xxxxx	xxxx	xxxxx				
Capacity Module:																
Cnflict Vol:	xxxx	xxxx	xxxxx	xxxx	xxxx	117	117	xxxx	xxxxx	xxxx	xxxx	xxxxx				
Potent Cap.:	xxxx	xxxx	xxxxx	xxxx	xxxx	941	1485	xxxx	xxxxx	xxxx	xxxx	xxxxx				
Move Cap.:	xxxx	xxxx	xxxxx	xxxx	xxxx	941	1485	xxxx	xxxxx	xxxx	xxxx	xxxxx				
Volume/Cap:	xxxx	xxxx	xxxx	xxxx	xxxx	0.01	0.02	xxxx	xxxx	xxxx	xxxx	xxxx				
Level Of Service Module:																
Queue:	xxxxx	xxxx	xxxxx	xxxxx	xxxx	0.0	0.0	xxxx	xxxxx	xxxxx	xxxx	xxxxx				
Stopped Del:	xxxxx	xxxx	xxxxx	xxxxx	xxxx	8.9	7.5	xxxx	xxxxx	xxxxx	xxxx	xxxxx				
LOS by Move:	*	*	*	*	*	A	A	*	*	*	*	*				
Movement:	LT -	LTR -	RT	LT -	LTR -	RT	LT -	LTR -	RT	LT -	LTR -	RT				
Shared Cap.:	xxxx	0	xxxxx	xxxx	xxxx	xxxxx	xxxx	xxxx	xxxxx	xxxx	xxxx	xxxxx				
SharedQueue:	xxxxx	xxxx	xxxxx	xxxxx	xxxx	xxxxx	0.0	xxxx	xxxxx	xxxxx	xxxx	xxxxx				
Shrd StpDel:	xxxxx	xxxx	xxxxx	xxxxx	xxxx	xxxxx	7.5	xxxx	xxxxx	xxxxx	xxxx	xxxxx				
Shared LOS:	*	*	*	*	*	*	A	*	*	*	*	*				
ApproachDel:	xxxxxx			8.9			xxxxxx			xxxxxx						
ApproachLOS:	*			A			*			*						

APPENDIX K.
RESPONSES TO COMMENTS ON DEIR

This page intentionally left blank